TOSHIBA

Mod. 2112 DTT

INSTALLATION AND SERVICE ADJUSTMENTS

GENERAL INFORMATIONS

All adjustments are thoroughly checked and corrected when the receiver leaves the factory. Therefore the receiver should operate normally and produce proper colour and B/W pictures upon installation. However, several minor adjustments may be required depending on the particular location in which the receiver is operated.
This receiver is shipped completely in cardboard carton. Carefully draw out the receiver from the carton and remove all packing materials. Plug the power cord into a convenient 220 volts 50 Hz AC two pin power outlet. Turn the receiver ON. Check and adjust all the customer controls such as BRIGHTNESS, CONTRAST and COLOUR Controls to obtain natural colour or B/W picture.

AUTOMATIC DEGAUSSING

A degaussing coil is mounted around the picture tube so that external degaussing after moving the receiver is normally unnecessary, providing the receiver is properly degaussed upon installation. The degaussing coil operates for about 1 second after the power to the receiver is switched ON. If the set is moved or faced in a different direction, the power switch must be switched off at least one hour in order that the automatic degaussing circuit operates properly. Should the chassis or parts of the cabinet become magnetized to cause poor colour purity, use an external degaussing coil. Slowly move the degaussing coil around the faceplate of the picture tube, the sides and front of the receiver and slowly withdraw the coil to a distance of about 2 m before disconnecting it from AC source.

HIGH VOLTAGE CHECK

CAUTION: There is no HIGH VOLTAGE ADJUSTMENT on this chassis.

1. Connect an accurate high voltage meter to the second anode of the picture tube.
2. Turn on the receiver. Set the BRIGHTNESS and CONTRAST to minimum (zero beam current).
3. High voltage will be measured approx. 26.3 kV.
4. Change BRIGHTNESS to both extremes to be sure the high voltage does not exceed the limit of 27.5 kV under any conditions.

HEIGHT ADJUSTMENT

1. Receive the WG PHILIPS pattern, and set the contrast and colour to centre, and the brightness to centre.
2. Change the VERT POSITION SW (S301) so that the round shape in the pattern is located in the centre of screen.
3. Adjust HEIGHT Control (R351) on MAIN Board so that white block at top and bottom of picture are just masked.

HORIZONTAL CENTRE ADJUSTMENT

1. Receive the WG PHILIPS pattern.
2. Set contrast, colour and brightness to centre.
3. Adjust Sub Address HPS so the pattern centre can be located at the screen centre.

FOCUS ADJUSTMENT

Adjust FOCUS Control on FLYBACK TRANS. (T461) for well defined scanning lines in the centre area on the screen.

RF AGC ADJUSTMENT

1. Tune the set in the strongest station in your area.
2. Turn RF AGC Control (R151) on PIF Board to fully counterclockwise position.
3. Adjust RF AGC Control clockwise until noise (snow) just disappears on the screen.

SIF DET ADJUSTMENT

1. Connect SIF generator to pin 2 of ICG30 through 0.01 μF capacitor.
2. Connect the oscilloscope to pin 9 of ICG30.
3. Set up the SIF generator as described below.
   Sound carrier frequency : 5.74 MHz
   Modulation frequency : 1000 Hz
   Frequency deviation : ±15 kHz
   Signal level : 80 dBμ (50 ohm load)
4. Adjust LG80 for the maximum response of 1000 Hz det-out on scope.
5. Connect SIF generator to pin 2 of ICG03 through 0.01 μF capacitor.
6. Connect oscilloscope to pin 9 of ICG03.
7. Set up the SIF generator as described below.
   Sound carrier frequency : 5.5 MHz
   Modulation frequency : 1 kHz
   Frequency deviation : +15 kHZ
   Signal level : 80 dBμ (50 ohm load)
8. Adjust LG05 for the maximum response of 1 kHz det-out on scope.

PAL MATRIX ADJUSTMENT

1. Tune in the colour programme of the Philips pattern.
2. Set the COLOUR Control to obtain the proper colour.
3. If the PAL MATRIX adjustment is incorrect, the Venetian Blind would appear in the colour bars area. This case needs the adjustment.
4. At the first, adjust DL PHASE ADJ. Coil (L551) to minimize the Venetian Blind.
5. Next adjust 1H-DL ADJ. VR (R551) to minimize the Blind.
6. If the Venetian Blind still remains, adjust 1H-DL PHASE ADJ. Coil (L551) to minimize the Blind again.
7. Repeat the item 5 and 6 procedures, adjust the R551 and L551 until the Blind does not appear.

CRT GREY SCALE ADJUSTMENT

1. Tune in an active channel.
2. Set "SERVICE MODE" by RMT H.H.U. ((F) + (→) and (1), (0), (4), (8))
3. Turn the SCREEN Control (on T461) fully counter-clockwise.
4. By rotating the RED, GREEN and BLUE CUT OFF Controls (R557, R558, R559) to the mid position.
5. Set the GREEN and BLUE DRIVE Controls (R252, R253) to the center.
6. Set the "CUT OFF (No Vertical Deflection) MODE" by RMT H.H.U. ((F) + (2) key)
7. Rotate the SCREEN Control gradually clockwise until the first line appears slightly on the screen. Set the SCREEN Control to this position.
8. Adjust the CUT OFF Controls to obtain the slightly lighted horizontal lines in the same levels of three colours (RED, GREEN and BLUE).
   The lines may look like white if the CUT OFF Controls are adjusted properly.
9. Release the "CUT OFF MODE" by RMT H.H.U. ((F) + (2) key)
10. Set the CONTRAST and COLOUR Controls to minimum, and BRIGHTNESS Control to the maximum.
11. Adjust the BLUE and GREEN DRIVE Controls (R252/R253) to obtain proper white-balanced picture in high light areas.
12. Set the BRIGHTNESS and CONTRAST Controls to obtain dark grey raster. Then check the white balance in low brightness. If the white balance is not proper, retouch the CUT OFF Controls and DRIVE Controls to obtain a good white balance in both low and high light areas.
13. Exit from the "SERVICE MODE" by turning the power ON/OFF with RMT H.H.U.

SUB-BRIGHTNESS ADJUSTMENT

1. Tune in a colour programme.
2. Set the "SERVICE MODE" by RMT H.H.U.
3. Set the CONTRAST Control to the maximum and BRIGHT Control to the center.
4. Set the COLOUR Control to the minimum.
5. Select the "SUB" symbol (F + ◪ (Item UP), F + ♪ (Item DN)) and adjust the level to the center by LEVEL key of RMT H.H.U. and leave the TV for five minutes in this state.

6. Watching the picture well, adjust the SUB-BRIGHT Control in the position (same method as in step No.5) where the picture does not show evidence of blooming in high bright area and not appear too dark in low bright portion.
7. Check the proper picture variation by rotating the CONTRAST and BRIGHTNESS Controls to both extremes.
8. If the picture does not appear dark with the CONTRAST and BRIGHTNESS Controls turned to minimum, or not appear bright with the controls turned to the maximum, adjust the SUB-BRIGHT Control again for the acceptable picture.
9. Exit from the "SERVICE MODE" by turning the power ON/OFF with the RMT H.H.U.

ADJUSTMENT METHOD

1. OUTLINE

Since each IC used is of I²C bus control type, readjustment of the TVs also needs adjustment through I²C bus control.
In the service mode, sub-bright, deflection system sub-adjustments, picture system sub-adjustments can be made easily with user remote control unit.

2. SERVICE MODE OPERATION

2-1. How to Enter the Service Mode

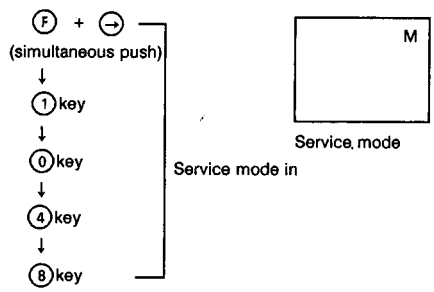

2-2. How to Exit from the Service Mode

Exit the service mode by turning the power on/off with the remote control.

3. ADJUSTMENT IN THE SERVICE MODE

3-1. Service Mode Level Adjustments

(1) Push F + key (simultaneous push) (item UP) or F + key (simultaneous push) (item DN) to select item to be adjusted.
(2) Adjust with the level UP/DN (VOL UP/DN key) key.

3-2. Other Service Mode Adjustments

F + 2 key (simultaneous push) cut off:
(NO VERTICAL DEFLECTION) ON/OFF

4. SERVICE MODE LEVEL ADJUSTMENT ITEM LIST

Symbol	RAM No.	Controlled IC	Item
HPS	30	MULTI-COL (TA8783N)	SUB H-POSITION

5. SUB DATA ADDITIONAL DESCRIPTION

RAM No.	Symbol	Description
16	SUB	Sub brightness setting
23	HPS	H screen position correction.

6. ROM DATA LIST FOR IIC BUS CONTROL

(Reference Value)

RAM No.	Symbol	Comment	Data
16	SUB	SUB -BRIGHTNESS	* 31
17	SBM	BRIGHTNESS ADJUST. WIDTH	28
18	SCN	SUB CONTRAST	32
19	SCM	CONTRAST MINIMUM	10
20	SCL	SUB COLOUR	34
21	SC3	SUB COLOUR 3.58	31
22	STI	SUB TINT	44
23	HPS	H. POSITION	* 40
24	SS4	SHARPNESS CENTER 4.43	20
25	SS3	SHARPNESS CENTER 3.58	50
26	IGR	STEREO SEPARATION	47
27	FLT	TONE FILTER	—
28	RFA	RF AGC	—
29	LVE	VIDEO OUTPUT LEVEL	—
30	M00	MODE 0	37
31	M01	MODE 1	10
32	M02	MODE 2	01

* Asterisked data is changeable depending on each TV. Standard data is indicated.

Figure 5. Trap Response

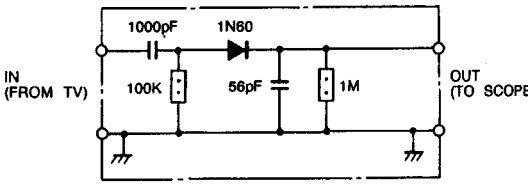

Figure 6. Detector Diagram

STEP	SWEEP/MARKER GENERATOR	ADJUST	PROCE
TRAP ALIGNMENT Control the sweep output for easy alignment. Set the IF markers for 40.4MHz and 31			
Trap coil TN01	40.4MHz Marker "ON"	TN01	Adjust TN01 so the 40.4M placed at bottom of respons
Trap coil TN02	31.9MHz Marker "ON"	TN02	Adjust TN02 so the 31.9M placed at bottom of respon

PICTURE I-F TRAP ALIGNM

GENERAL ..... Refer to figure 4 for the equipment cor
PRELIMINARY STEPS ..... 1. Turn the power switch of TV set off.
2. Supply +12 volts to the PIF Board.
3. Turn RF AGC Control (R151) fully cl
SWEEP/MARKER GENERATOR..... Connect to pin PL of P102 on the PIF
Set the signal level to 80dBμV.
OSCILLOSCOPE..... Connect through the detector (See figu

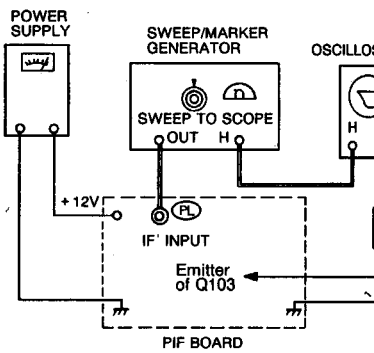

Figure 4.

the picture well, adjust the SUB-BRIGHT
n the position (same method as in step
ere the picture does not show evidence of
in high bright area and not appear too
w bright portion.
e proper picture variation by rotating the
ST and BRIGHTNESS Controls to both
.
cture does not appear dark with the
ST and BRIGHTNESS Controls turned to
, or not appear bright with the controls
the maximum, adjust the SUB-BRIGHT
gain for the acceptable picture.
the "SERVICE MODE" by turning the
/OFF with the RMT H.H.U.

ADJUSTMENT METHOD

IC used is of I²C bus control type,
of the TVs also needs adjustment through
l.
mode, sub-bright, deflection system sub-
picture system sub-adjustments can be
ith user remote control unit.

MODE OPERATION
nter the Service Mode

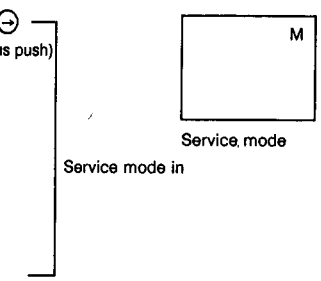

xit from the Service Mode
ce mode by turning the power on/off with
ntrol.

ENT IN THE SERVICE MODE
Mode Level Adjustments
+ key (simultaneous push) (item UP)
key (simultaneous push) (item DN) to
m to be adjusted.
h the level UP/DN (VOL UP/DN key) key.

rvice Mode Adjustments
(simultaneous push) cut off:
VERTICAL DEFLECTION) ON/OFF

MODE LEVEL ADJUSTMENT ITEM LIST

l	RAM No.	Controlled IC	Item
	30	MULTI-COL (TA8783N)	SUB H-POSITION

A ADDITIONAL DESCRIPTION

AM o.	Symbol	Description
6	SUB	Sub brightness setting
3	HPS	H screen position correction.

6. ROM DATA LIST FOR IIC BUS CONTROL

(Reference Value)

RAM No.	Symbol	Comment	Data
16	SUB	SUB BRIGHTNESS	* 31
17	SBM	BRIGHTNESS ADJUST. WIDTH	28
18	SCN	SUB CONTRAST	32
19	SCM	CONTRAST MINIMUM	10
20	SCL	SUB COLOUR	34
21	SC3	SUB COLOUR 3.58	31
22	STI	SUB TINT	44
23	HPS	H. POSITION	* 40
24	SS4	SHARPNESS CENTER 4.43	20
25	SS3	SHARPNESS CENTER 3.58	50
26	IGR	STEREO SEPARATION	47
27	FLT	TONE FILTER	—
28	RFA	RF AGC	—
29	LVE	VIDEO OUTPUT LEVEL	—
30	M00	MODE 0	37
31	M01	MODE 1	10
32	M02	MODE 2	01

* Asterisked data is changeable depending on each TV. Standard data is indicated.

Figure 5. Trap Response

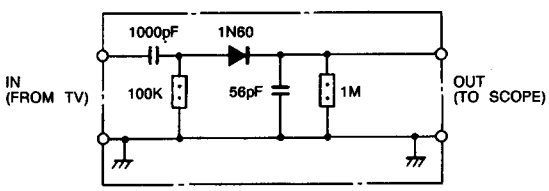

Figure 6. Detector Diagram

STEP	SWEEP/MARKER GENERATOR	ADJUST	PROCEDURE
TRAP ALIGNMENT Control the sweep output for easy alignment. Set the IF markers for 40.4MHz and 31.9MHz.			
Trap coil TN01	40.4MHz Marker "ON"	TN01	Adjust TN01 so the 40.4MHz marker point is placed at bottom of response. (See figure 5.)
Trap coil TN02	31.9MHz Marker "ON"	TN02	Adjust TN02 so the 31.9MHz marker point is placed at bottom of response. (See figure 5.)

PICTURE I-F TRAP ALIGNMENT

GENERAL ..... Refer to figure 4 for the equipment connection.
PRELIMINARY STEPS ..... 1. Turn the power switch of TV set off.
2. Supply +12 volts to the PIF Board.
3. Turn RF AGC Control (R151) fully clockwise.
SWEEP/MARKER GENERATOR ..... Connect to pin PL of P102 on the PIF Board as shown in figure 4. Set the signal level to 80dBμV.
OSCILLOSCOPE ..... Connect through the detector (See figure 6.) to the emitter of Q103.

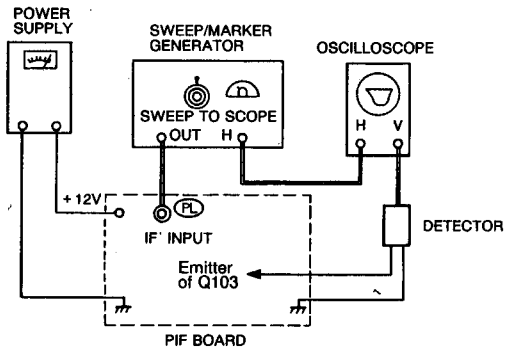

Figure 4.

PICTURE I-F SWEEP ALIGNMENT

GENERAL ..... Refer to figure 7 for test equipment connection.
PRELIMINARY STEPS ..... 1. Supply +12 volts to the PIF Board.
2. Supply dc 4~5V to pin 4 of IC101.
3. Connect pin 16 of IC101 to ground through capacitor 10 μF.
SWEEP/MARKER GENERATOR..... Connect to pin PL of PIF Board as shown in figure 7.
Set to 30 ~ 40 MHz sweep with signal level of 75 ~ 85 dBμ.
OSCILLOSCOPE ..... Connect through the detector to pin 19 of IC101 on the IF Board.

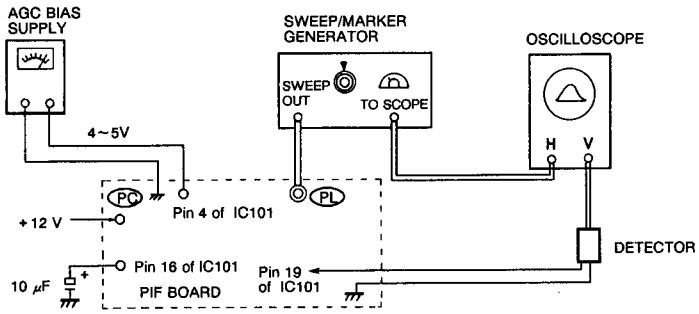

Figure 7. Picture IF Sweep Alignment

STEP	SWEEP/MARKER GENERATOR	ADJUST	REMARKS
38.9MHz VCO Coil	38.9 MHz Marker "ON"	L151	• Adjust L151 so that the marker (38.9 MHz) on the response can get zero beat with free-run frequency. (See figure 8.) • Remove the capacitor 10μF on pin 16 of IC101.
After completing the above step, disconnect the equipment and re-solder the solder links, and adjust the RF AGC Control (R151) following RF AGC ADJUSTMENTS.			

Figure 8. Magnified Response Curve

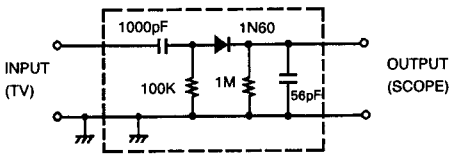

Detector Diagram

AFC ALIGNMENT

GENERAL ..... Refer to figure 9 for test equipment connection.
PRELIMINARY STEPS ..... 1. Supply +12 volts to the PIF Board.
DVM..... Connect to the pin PF of P101 on PIF Board and ground.

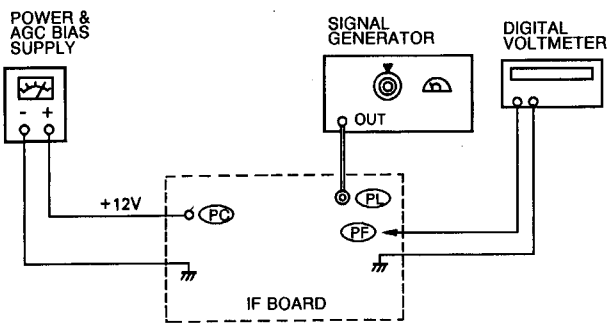

Figure 9. AFC Alignment

STEP	SIGNAL GENERATOR	ADJUST	REMARKS
1. AFC Balance (R153)	NO SIGNAL	R153	• Connect pin 4 of IC101 to ground. • Connect DVM to pin PF of P101 on • Adjust R153 for 4.5 volts reading o
2. AFC Coil (L152)	38.9 MHz CARRIER WAVE (Level : 75 to 85 dBμ)	L153	• Remove the short of pin 4 of IC101 • Apply +12 V to pin PC of P101. • Connect IF carrier wave to the pin • Connect DVM to pin PF of P101. • Adjust L152 for 4.3 volts on the me

SIF & MPX (IGR) ALIGNMEN

■ **Supply +12V to pin SN of PG02 on IGR Board.**

STEP	ADJUSTING PARTS	INPUT TERMINAL	OUTPUT TERMINAL	TEST SIGNAL	
1.	54.7 kHz PILOT ADJ. (LG01)	CG45 1μF SG	Pin 5 (ICG01)	Pilot Signal Input level: 100mVp-p f = 54.69 kHz	1. 2. 3.
2.	STEREO SEPARATION (RG50)	Aerial	PIN SA (PG01)	ON AIR SIGNAL S1: fm = 1 kHz Δf = ±15 kHz S2: fm = 1 kHz Δf = ±30 kHz LEFT CH.: No modulation Input level: 100dBμ	1. 2. 3.

1. NO RASTER AND NO SOUND

(a) CHECK/REPAIR POWER CIRCUIT

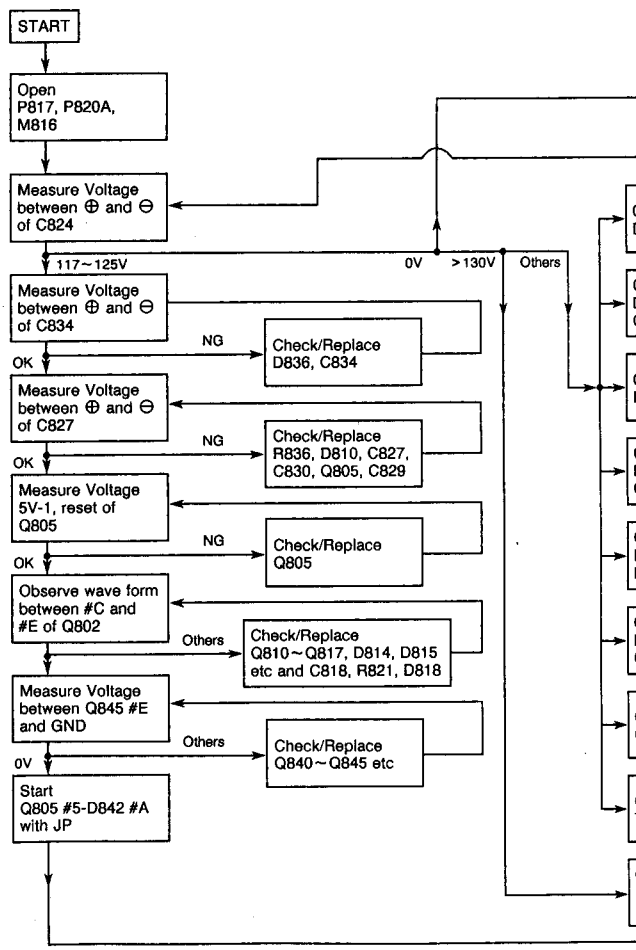

NAL RATOR	ADJUST	REMARKS
	R153	• Connect pin 4 of IC101 to ground. • Connect DVM to pin PF of P101 on PIF Board. • Adjust R153 for 4.5 volts reading on meter.
WAVE to 85 dBμ)	L153	• Remove the short of pin 4 of IC101. • Apply +12 V to pin PC of P101. • Connect IF carrier wave to the pin PL of P102. • Connect DVM to pin PF of P101. • Adjust L152 for 4.3 volts on the meter.

SIF & MPX (IGR) ALIGNMENT

/ to pin SN of PG02 on IGR Board.

NG S	INPUT TERMINAL	OUTPUT TERMINAL	TEST SIGNAL	PROCEDURE
ILOT	CG45 1μF SG	Pin 5 (ICG01)	Pilot Signal Input level: 100mVp-p f = 54.69 kHz	1. Connect the signal to CG45. 2. Connect oscilloscope to pin 5 of ICG01. 3. Adjust LG01 for the maximum amplitude of 54.69 kHz element.
ON	Aerial	PIN SA (PG01)	ON AIR SIGNAL S1: fm = 1 kHz Δf = ±15 kHz S2: fm = 1 kHz Δf = ±30 kHz LEFT CH.: No modulation Input level: 100dBμ	1. Receive ON-AIR stereo signal. 2. Connect oscilloscope to pin SA of PG02. 3. Adjust RG50 for the minimum amplitude of 1 kHz element.

TROUBLESHOOTING CHARTS

The following charts are devoted to troubleshooting which, if followed carefully, will assist you in tracking down a fault to the correct stage.
In order to utilize the charts (fault trees), firstly establish the complaint, i.e. – No Raster, No Sound.
Locate the chart applicable and then progress through the various alternatives until a final block indicates the offending components or stage.

NO RASTER (NOISE OR WEAK SOUND)

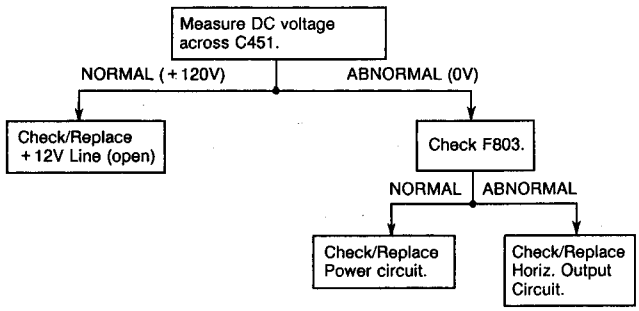

NO SOUND

POWER CIRCUIT

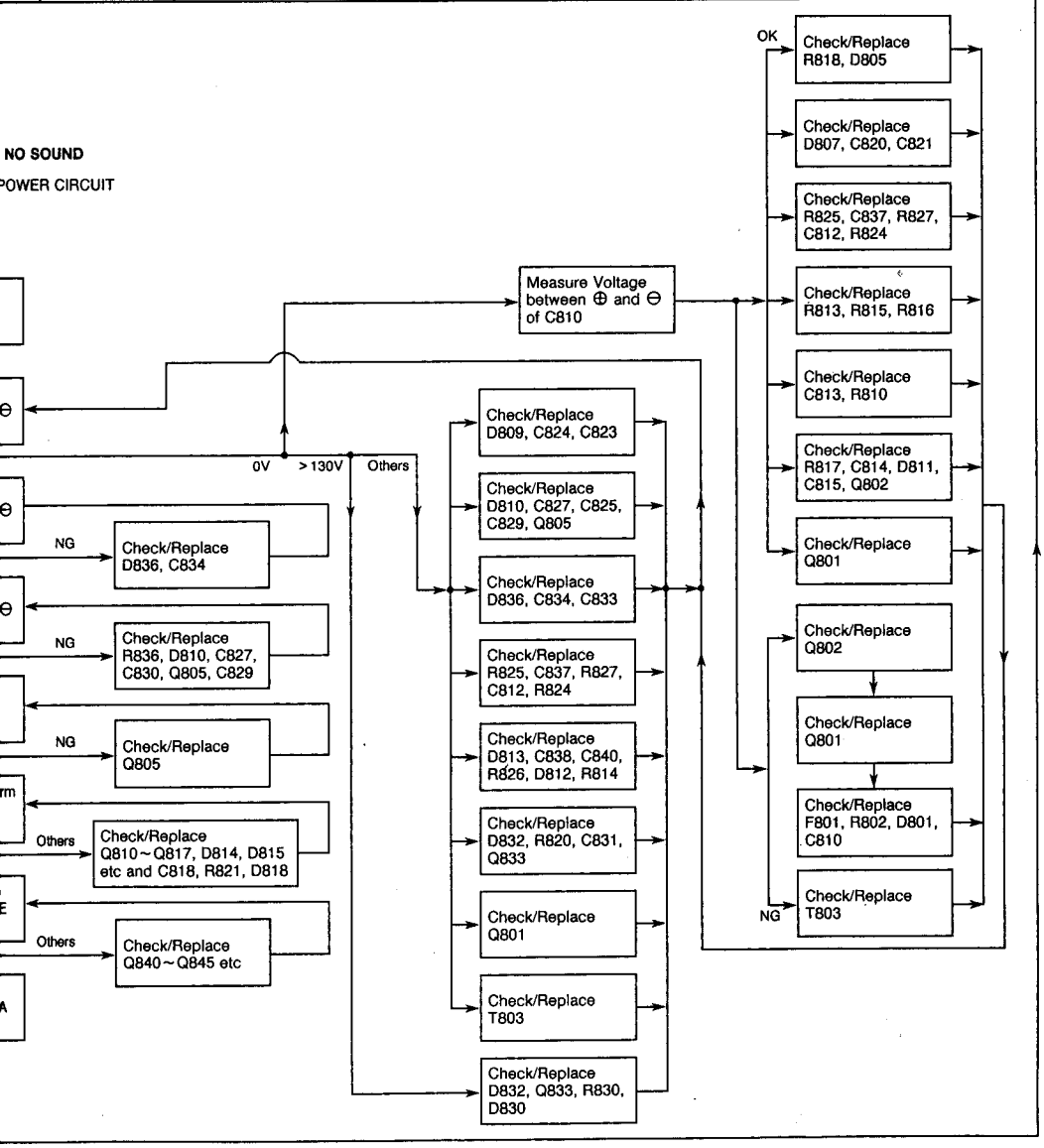

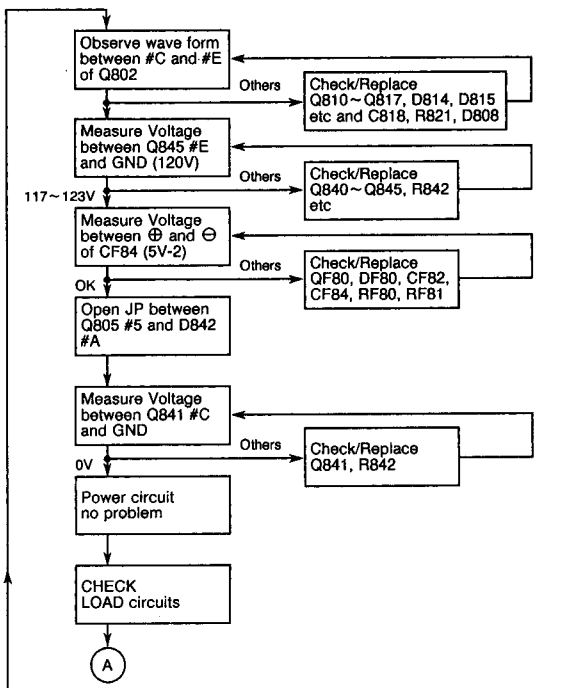

(b) CHECK/REPAIR LOAD CIRCUITS

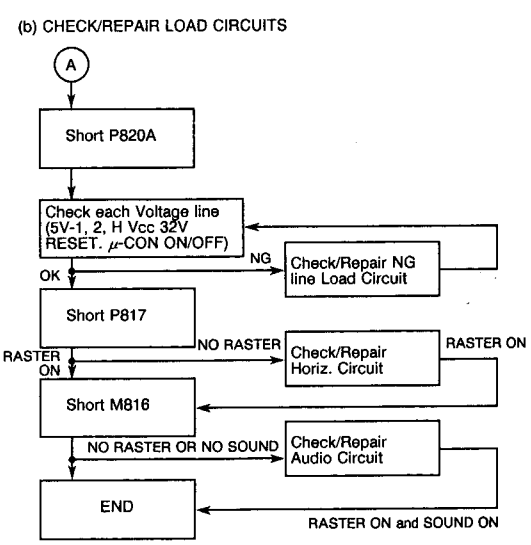

NO RASTER (SOUND OK)

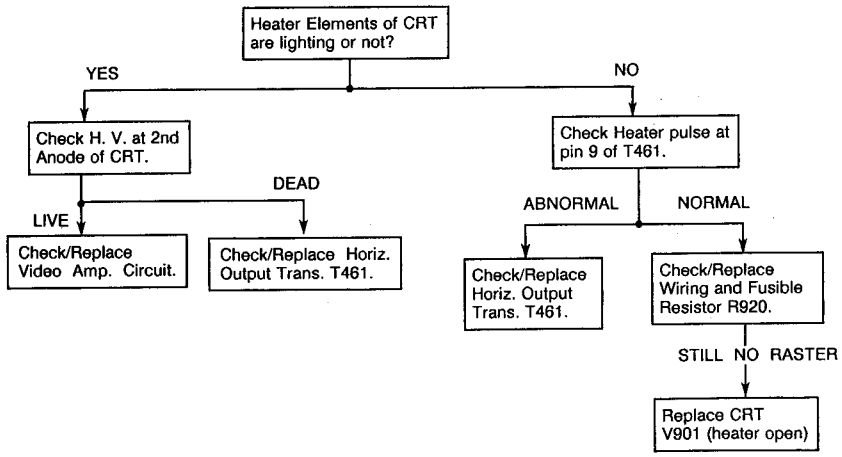

NO SOUND

Note: Check the sound signal waveform for shaded area below.

CONDITION : VOLUME MAX.

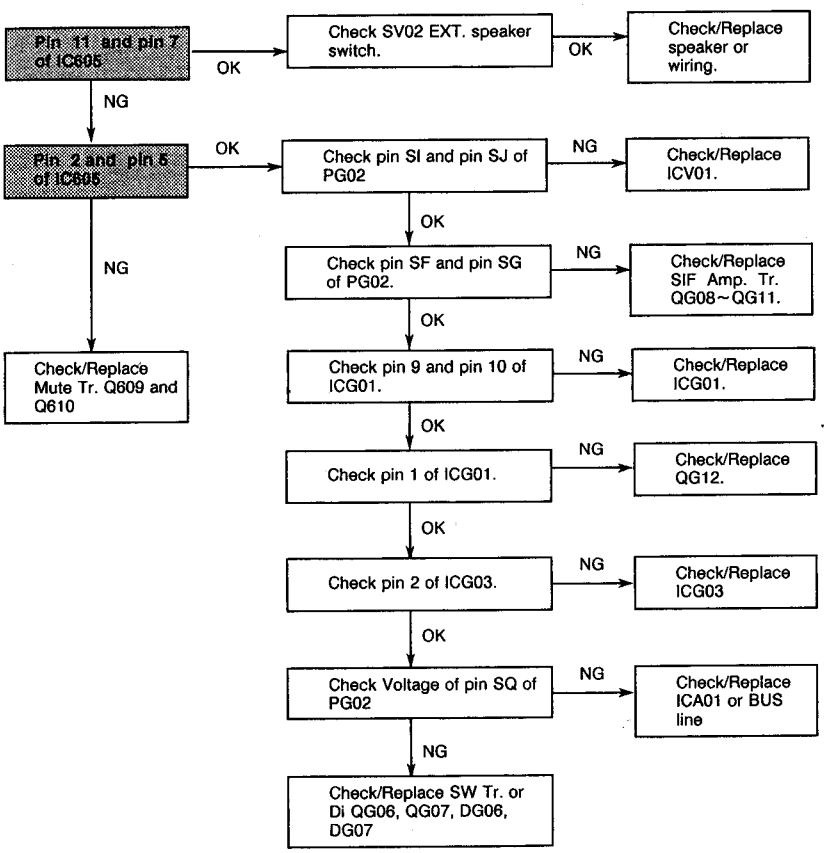

[CHART 3] Remote Control Operation Check

Note : Before checking RMT operation, check that key operation on TV set is proper.

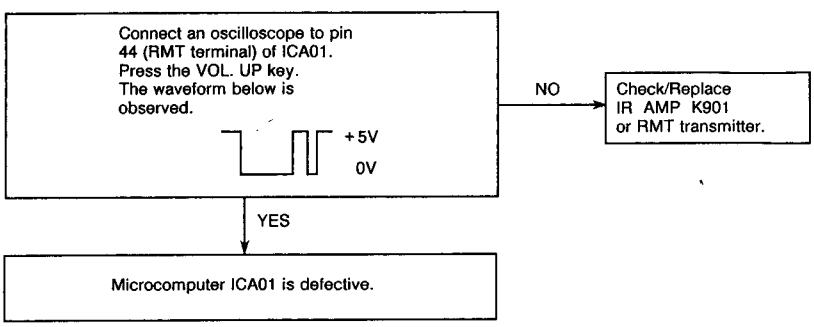

CHANNEL SELECTOR TROUBLE

[CHART 1]

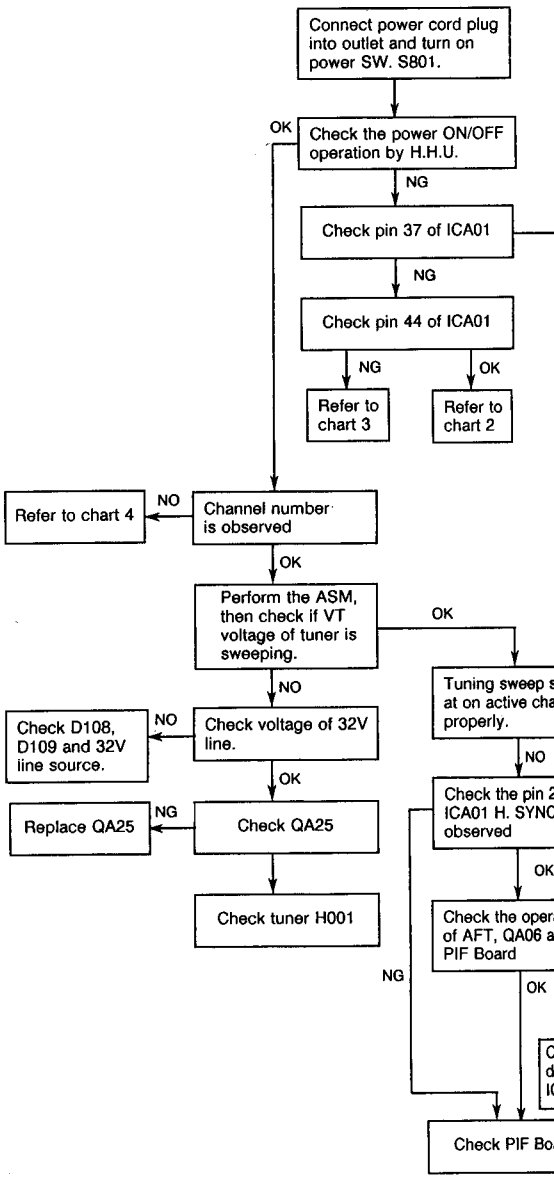

TELETEXT OPERATION TROUBLE

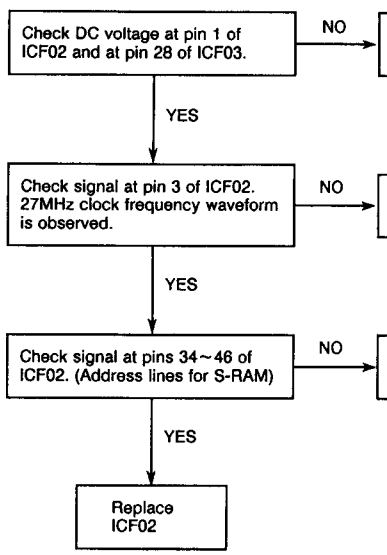

NNEL SELECTOR TROUBLE
RT 1]

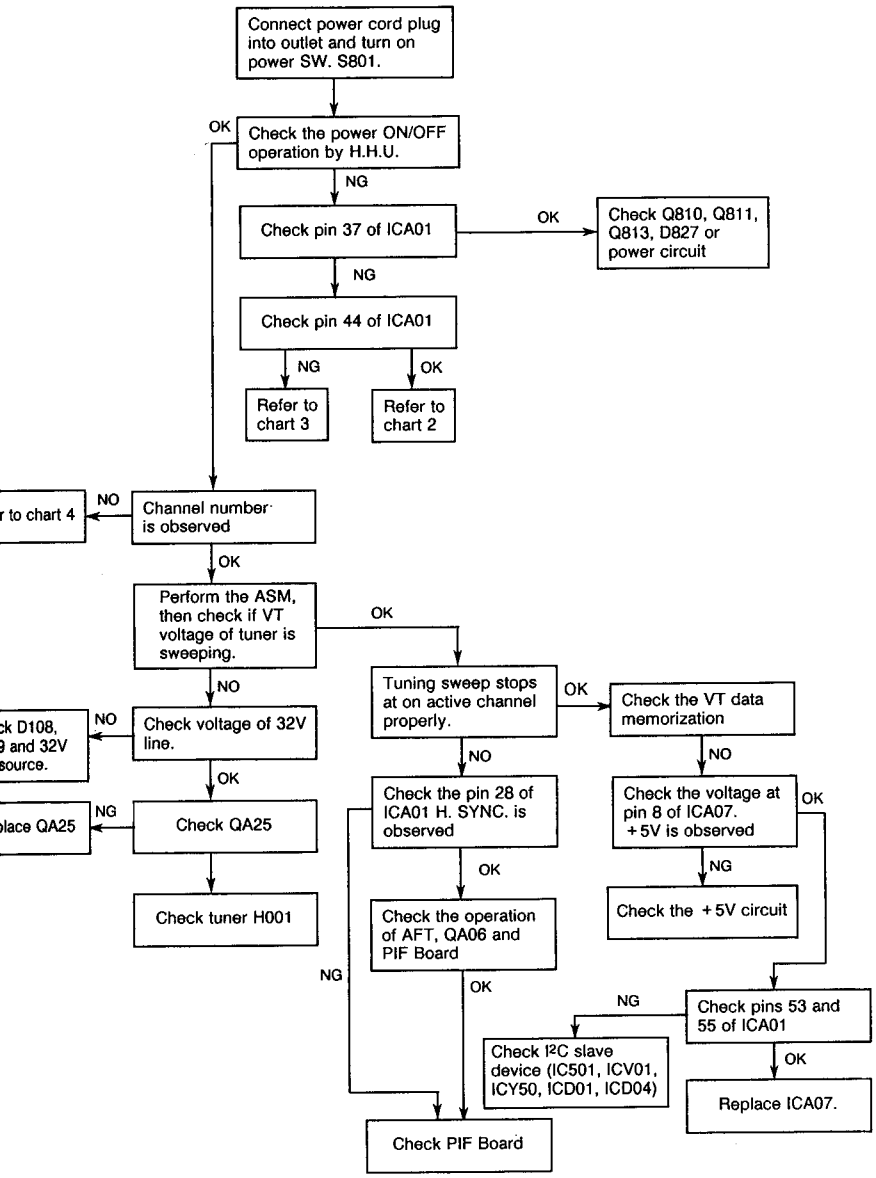

[CHART 2] Microcomputer (ICA01) Operation Check

Note: Before checking Microcomputer, check that control buttons and their connection work properly.

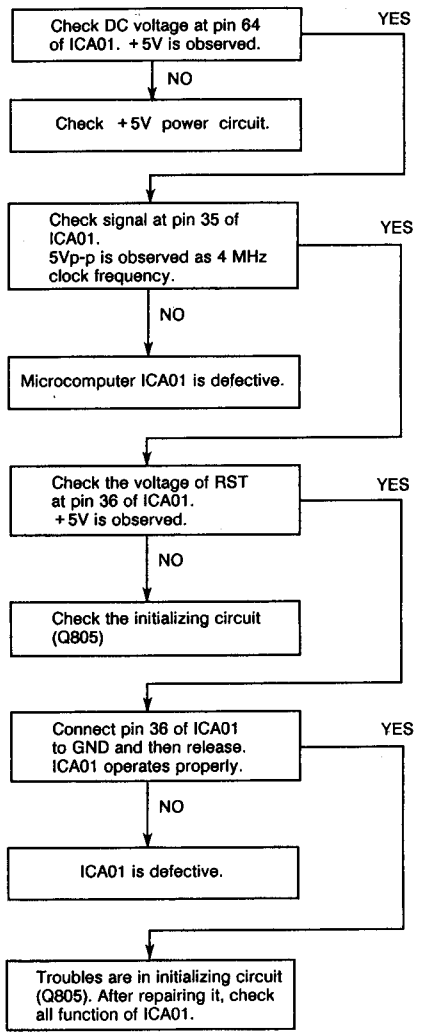

TEXT OPERATION TROUBLE

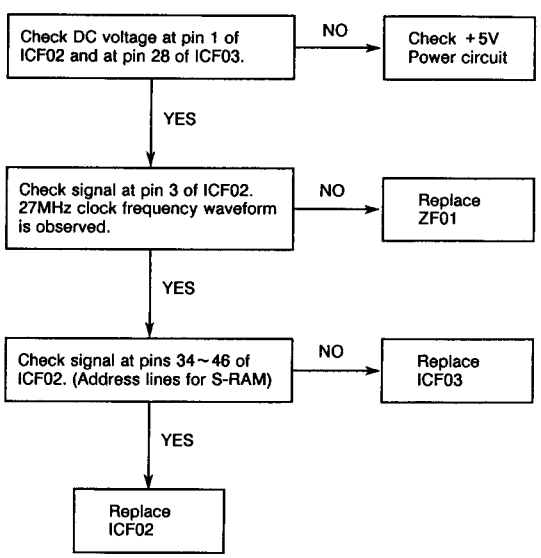

[CHART 4] On Screen Display Operation Check

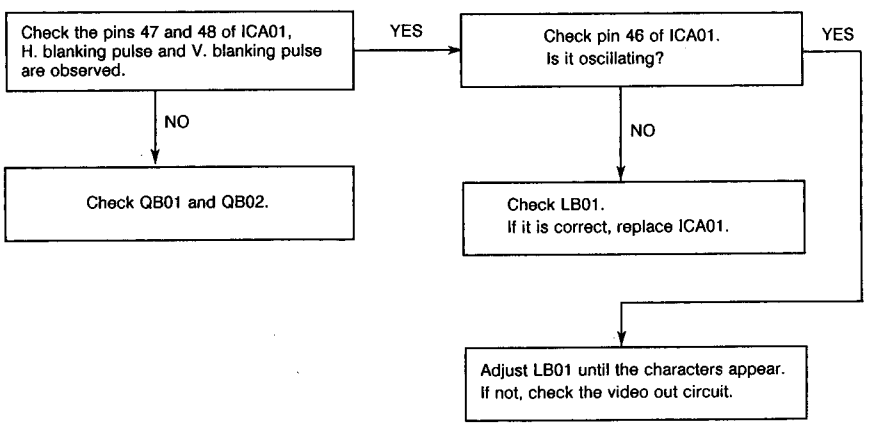

UG01 IGR BOARD PB1810-2

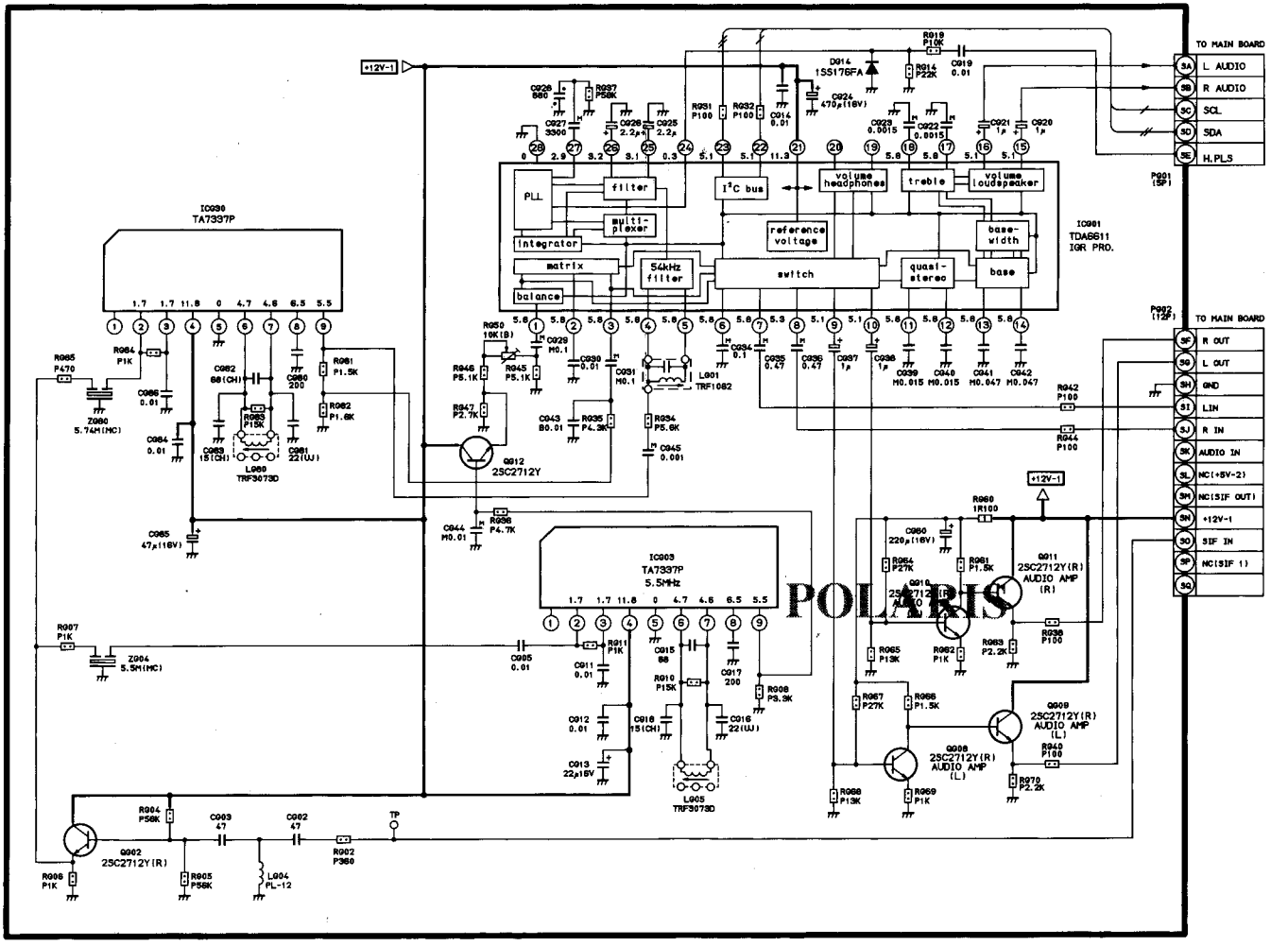

U101 PIF BOARD PB1810-1

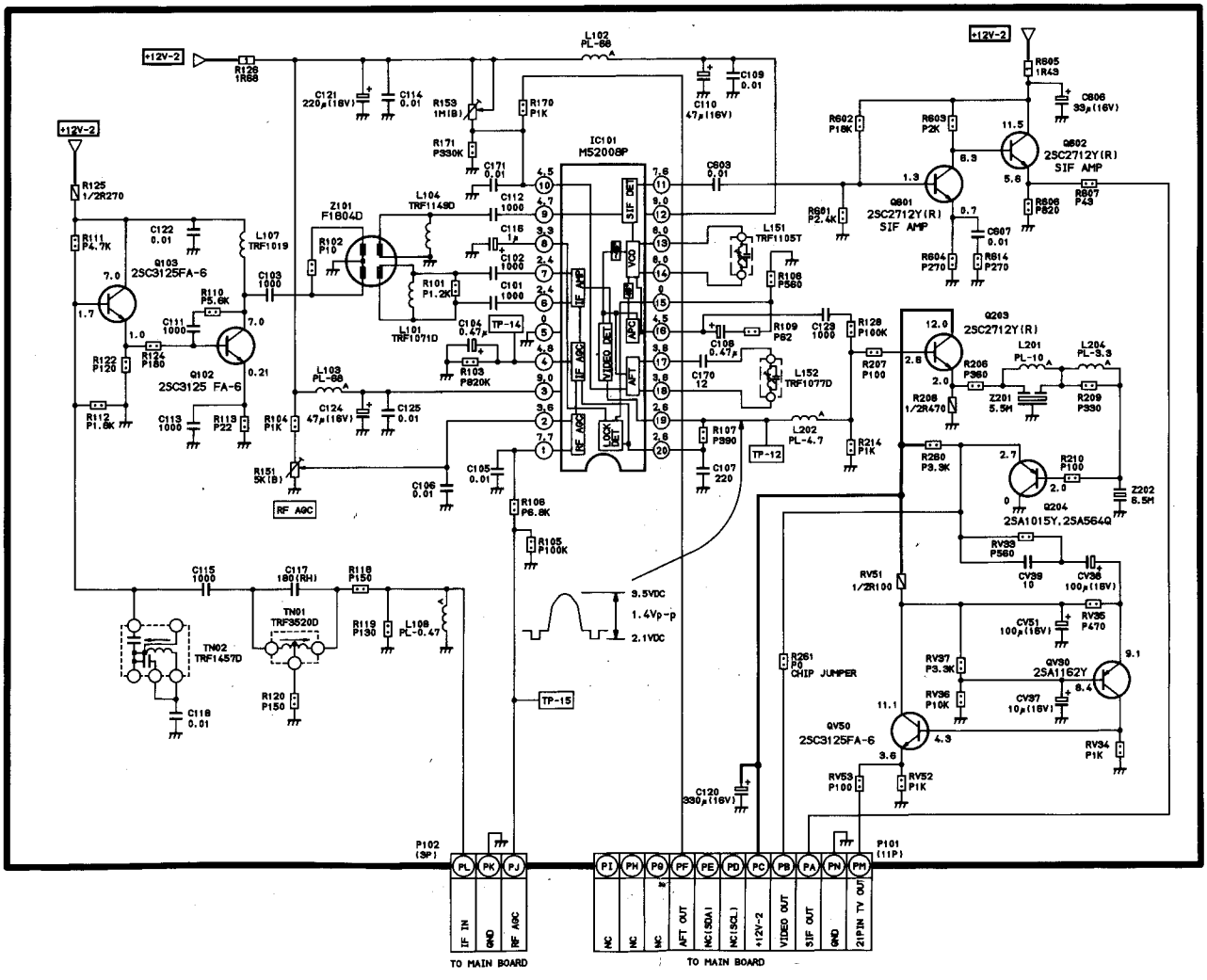

NO VERT. SCAN (ONE HORIZ. LINE RASTER)

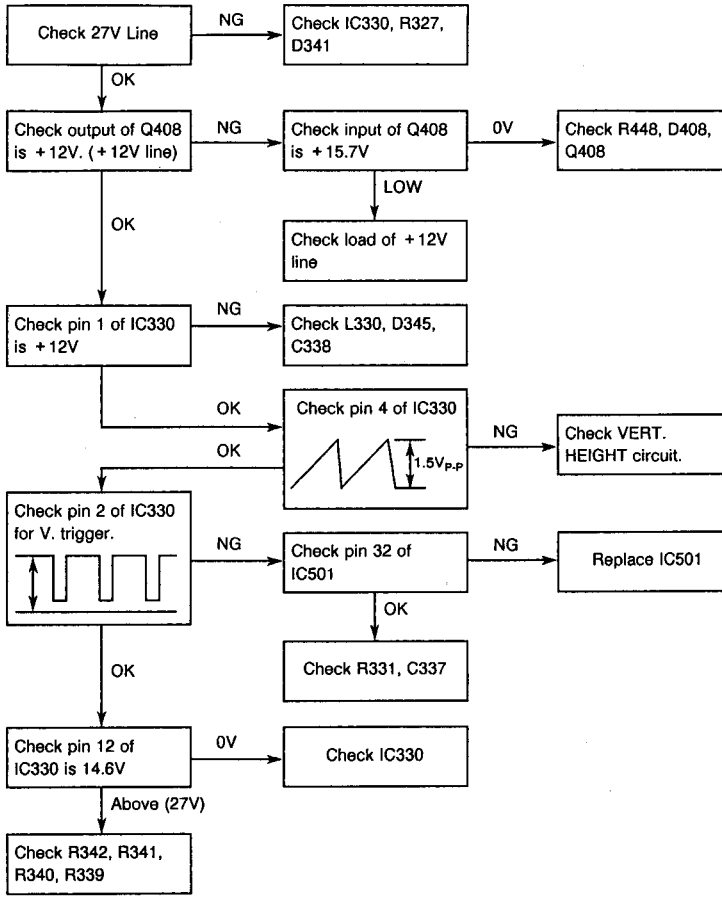

OUT OF VERT. SYNC. AND HORIZ. SYNC.

Check/Replace Sync Circuit (pin 33 of IC501) and IC501.

OUT OF HORIZ. SYNC.

Check/Replace IC501.

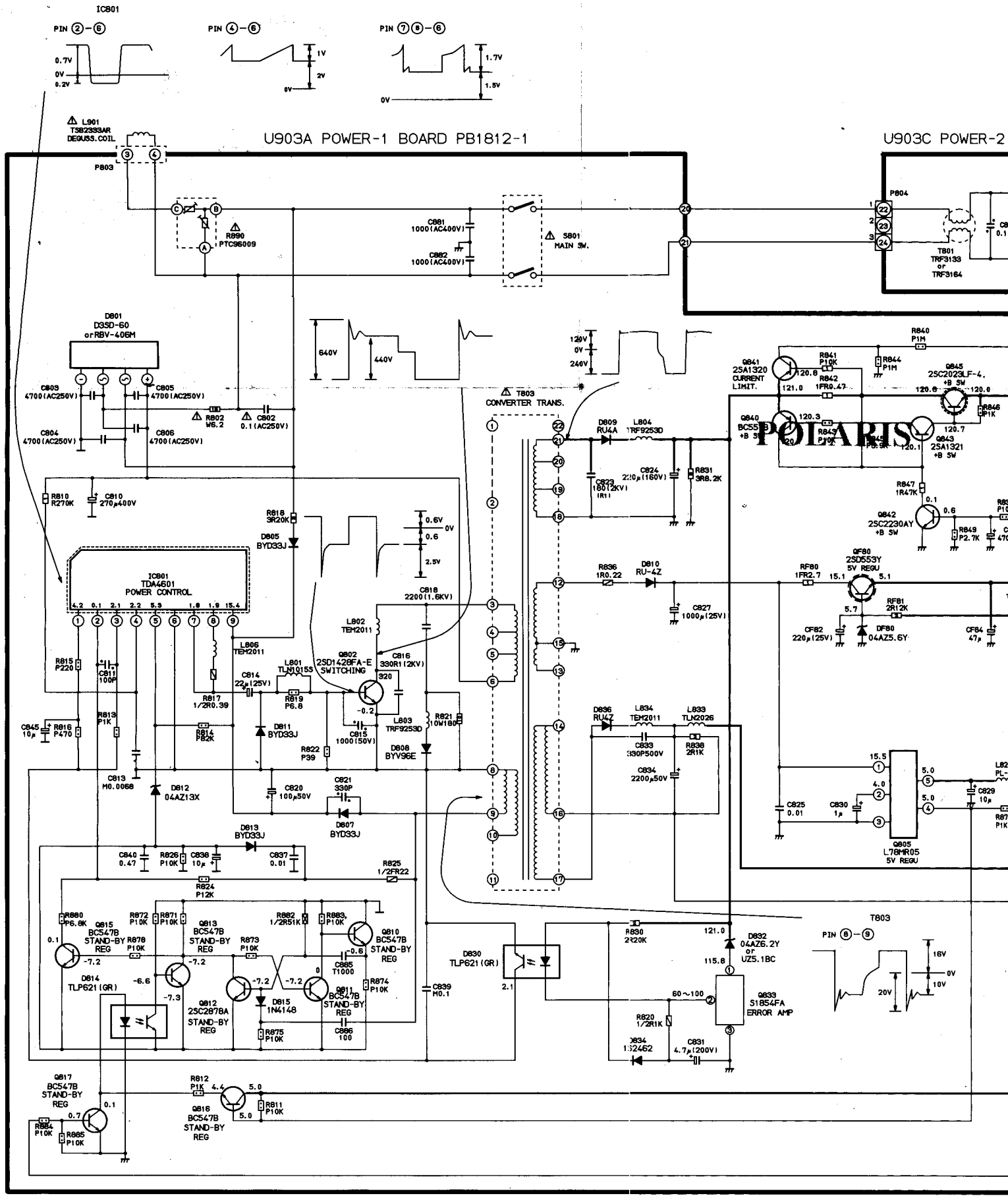
U903A POWER-1 BOARD PB1812-1
U903C POWER-2
IC801
PIN ②-⑥
PIN ④-⑥
PIN ⑦⑧-⑥
L901
TS82333AR
DEGUSS.COIL
P803
R890
PTC96009
C881
1000(AC400V)
C882
1000(AC400V)
S801
MAIN SW.
P804
T801
TRF3133
or
TRF3164
D801
D3SD-60
orRBV-406M
C803
4700(AC250V)
C805
4700(AC250V)
C804
4700(AC250V)
C806
4700(AC250V)
R802
W6.2
C802
0.1(AC250V)
T803
CONVERTER TRANS.
R810
R270K
C810
270μ400V
R818
3R20K
D805
BYD33J
IC801
TDA4601
POWER CONTROL
L806
TEM2011
L802
TEM2011
C818
2200(1.6KV)
Q802
2SD1428FA-E
SWITCHING
C816
330R1(2KV)
L801
TLN1015S
C814
22μ(25V)
R819
P6.8
R817
1/2R0.39
R815
P220
C811
100P
R813
P1K
C845
10μ
R816
P470
R814
P82K
D811
BYD33J
R822
P39
L803
TRF9253D
R821
10W180
C815
1000(50V)
D808
BYV96E
C813
M0.0068
D812
04AZ13X
C820
100μ50V
C821
330P
D807
BYD33J
D813
BYD33J
C840
0.47
R826
P10K
C838
10μ
C837
0.01
R825
1/2FR22
R824
P12K
R880
P6.8K
Q815
BC547B
STAND-BY
REG
R878
P10K
R872
P10K
R871
P10K
Q813
BC547B
STAND-BY
REG
R873
P10K
R882
1/2R51K
R883
P10K
Q810
BC547B
STAND-BY
REG
C885
T1000
R874
P10K
D814
TLP621(GR)
Q812
2SC2878A
STAND-BY
REG
D815
1N4148
Q811
BC547B
STAND-BY
REG
R875
P10K
C886
100
C839
M0.1
D830
TLP621(GR)
Q817
BC547B
STAND-BY
REG
R884
P10K
R885
P10K
R812
P1K
Q816
BC547B
STAND-BY
REG
R811
P10K
640V
440V
120V
0V
240V
0.6V
0V
0.6
2.5V
D809
RU4A
L804
TRF9253D
C823
1801(2KV)
(R1)
C824
220μ(160V)
R831
3R8.2K
R836
1R0.22
D810
RU-4Z
C827
1000μ(25V)
D836
RU4Z
L834
TEM2011
L833
TLN2026
C833
330P500V
R838
2R1K
C834
2200μ50V
R830
2R20K
D832
04AZ6.2Y
or
UZ5.1BC
Q833
S1854FA
ERROR AMP
R820
1/2R1K
D834
1S2462
C831
4.7μ(200V)
Q841
2SA1320
CURRENT
LIMIT.
R841
P10K
R842
1FR0.47
R844
P1M
R840
P1M
Q845
2SC2023LF-4.
+B SW
R846
P1K
Q840
BC55
+B SW
R843
P6.8K
Q843
2SA1321
+B SW
R847
1R47K
Q842
2SC2230AY
+B SW
R849
P2.7K
QF80
2SD553Y
5V REGU
RF80
1FR2.7
RF81
2R12K
CF82
220μ(25V)
DF80
04AZ5.6Y
CF84
47μ
C825
0.01
C830
1μ
Q805
L78MR05
5V REGU
C829
10μ
T803
PIN ⑧-⑨
16V
0V
10V
20V
POLARIS

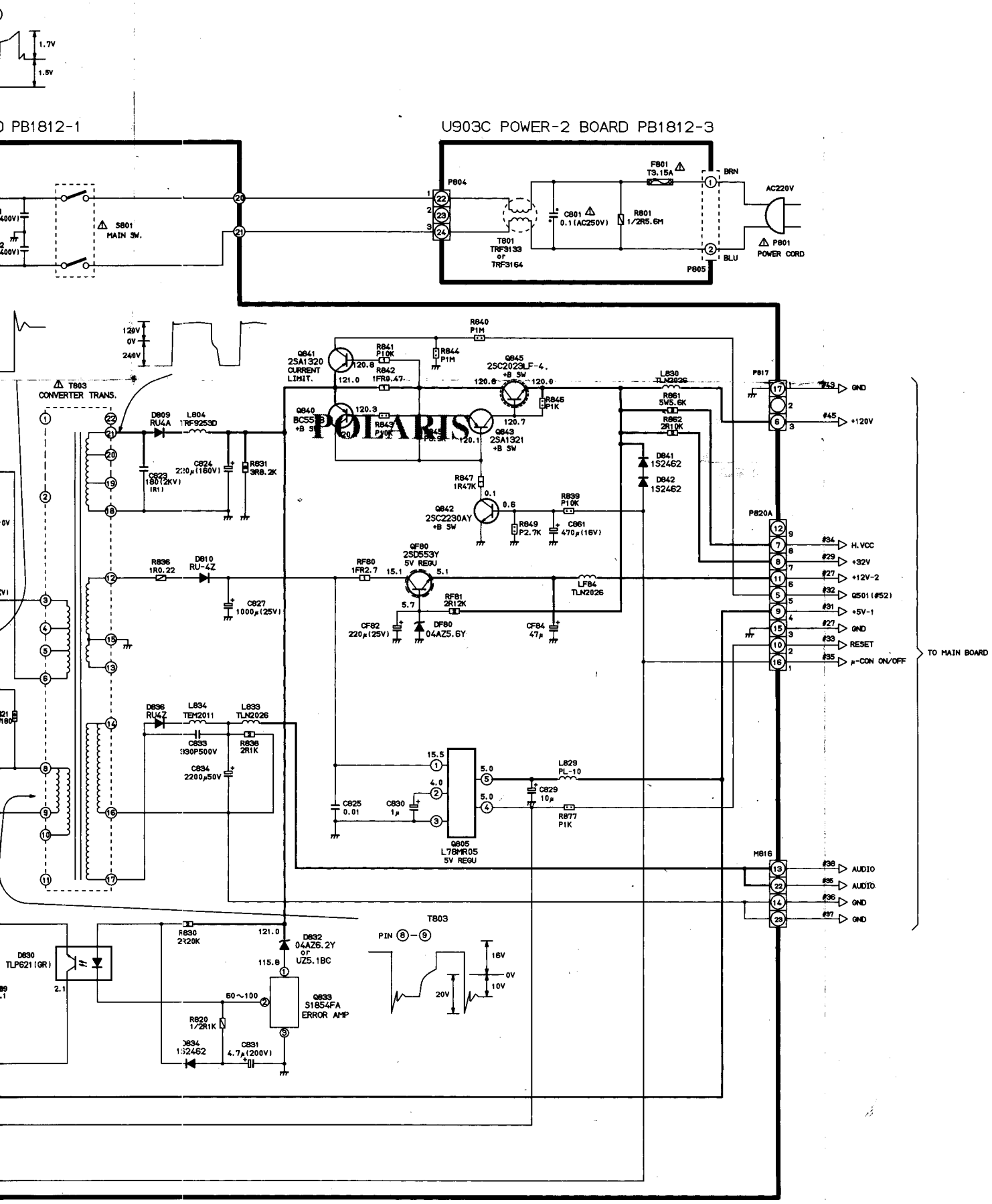
PB1812-1
U903C POWER-2 BOARD PB1812-3
S801 MAIN SW.
P804
P805
T801 TRF3133 or TRF3164
C801 0.1(AC250V)
R801 1/2R5.6M
F801 T3.15A
BRN
BLU
AC220V
P801 POWER CORD
T803 CONVERTER TRANS.
D809 RU4A
L804 TRF9253D
C824 220μ(160V)
R831 3R8.2K
Q841 2SA1320 CURRENT LIMIT.
R841 P10K
R842 1FR0.47
R844 P1M
R840 P1M
Q845 2SC2023LF-4. +B SW
R846 P1K
Q840 BC557B +B SW
R843 P10K
Q843 2SA1321 +B SW
R847 1R47K
Q842 2SC2230AY +B SW
R849 P2.7K
C861 470μ(16V)
R839 P10K
L830 TLN2026
R861 5W5.6K
R862 2R10K
D841 1S2462
D842 1S2462
P817
#43 GND
#45 +120V
P820A
#34 H.VCC
#29 +32V
#27 +12V-2
#32 Q501(#52)
#31 +5V-1
#27 GND
#33 RESET
#35 μ-CON ON/OFF
TO MAIN BOARD
R836 1R0.22
D810 RU-4Z
C827 1000μ(25V)
QF80 2SD553Y 5V REGU
RF80 1FR2.7
RF81 2R12K
CF82 220μ(25V)
DF80 04AZ5.6Y
CF84 47μ
LF84 TLN2026
D836 RU4Z
L834 TEM2011
L833 TLN2026
C833 330P500V
R838 2R1K
C834 2200μ50V
C825 0.01
C830 1μ
Q805 L78MR05 5V REGU
L829 PL-10
C829 10μ
R877 P1K
M816
#38 AUDIO
#36 AUDIO
#36 GND
#37 GND
D830 TLP621(GR)
R830 2R20K
D832 04AZ6.2Y or UZ5.1BC
Q833 S1854FA ERROR AMP
R820 1/2R1K
D834 1S2462
C831 4.7μ(200V)
T803 PIN ⑧-⑨
16V
0V
10V
20V
120V
0V
240V
POLARIS

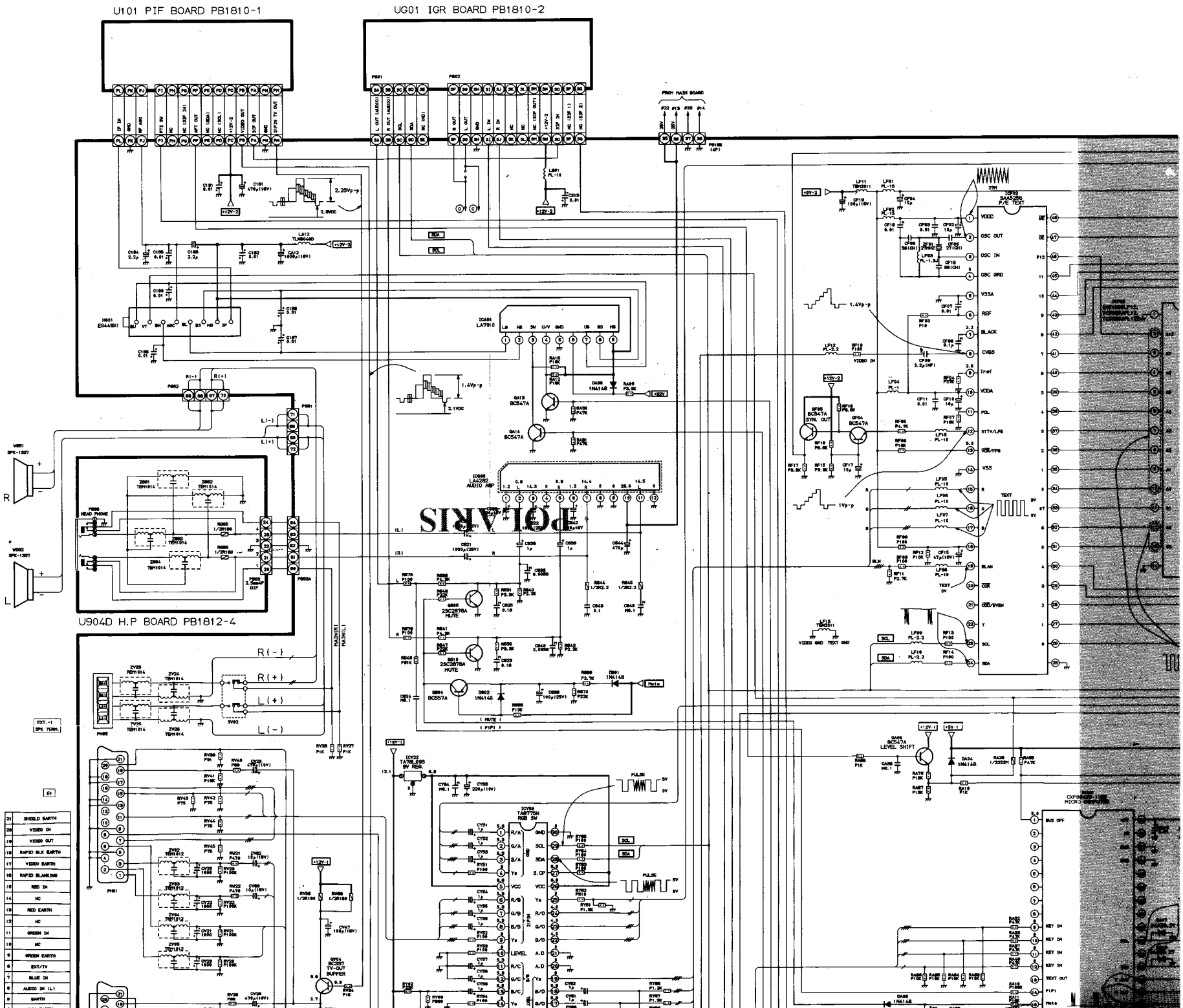
U101 PIF BOARD PB1810-1
UG01 IGR BOARD PB1810-2
U904D H.P BOARD PB1812-4
FROM MAIN BOARD
POLARIS
TDP32 34A5256 P/E TEXT
IC506 LA7910
IC506 LA4282 AUDIO AMP
IC501 TA8775N RGB 5V
IC502 TA78L05S 5V REG.
Q502 BC547A TV-OUT BUFFER
Q503 BC547A LEVEL SHIFT
Q504 BC547A SYN. OUT
Q505 BC547A
Q506 BC547A
Q507 2SC2878A MUTE
Q508 2SC2878A MUTE
Q509 BC557A
Q510 2SC2878A
Q511 BC547A
Q512 BC547A
Q513 BC547A
Q514 BC547A
Q515 BC547A
Q516 BC547A
Q517 BC547A
Q518 BC547A
Q519 BC547A
Q520 BC547A
Q521 BC547A
Q522 BC547A
Q523 BC547A
Q524 BC547A
Q525 BC547A
Q526 BC547A
Q527 BC547A
Q528 BC547A
Q529 BC547A
Q530 BC547A

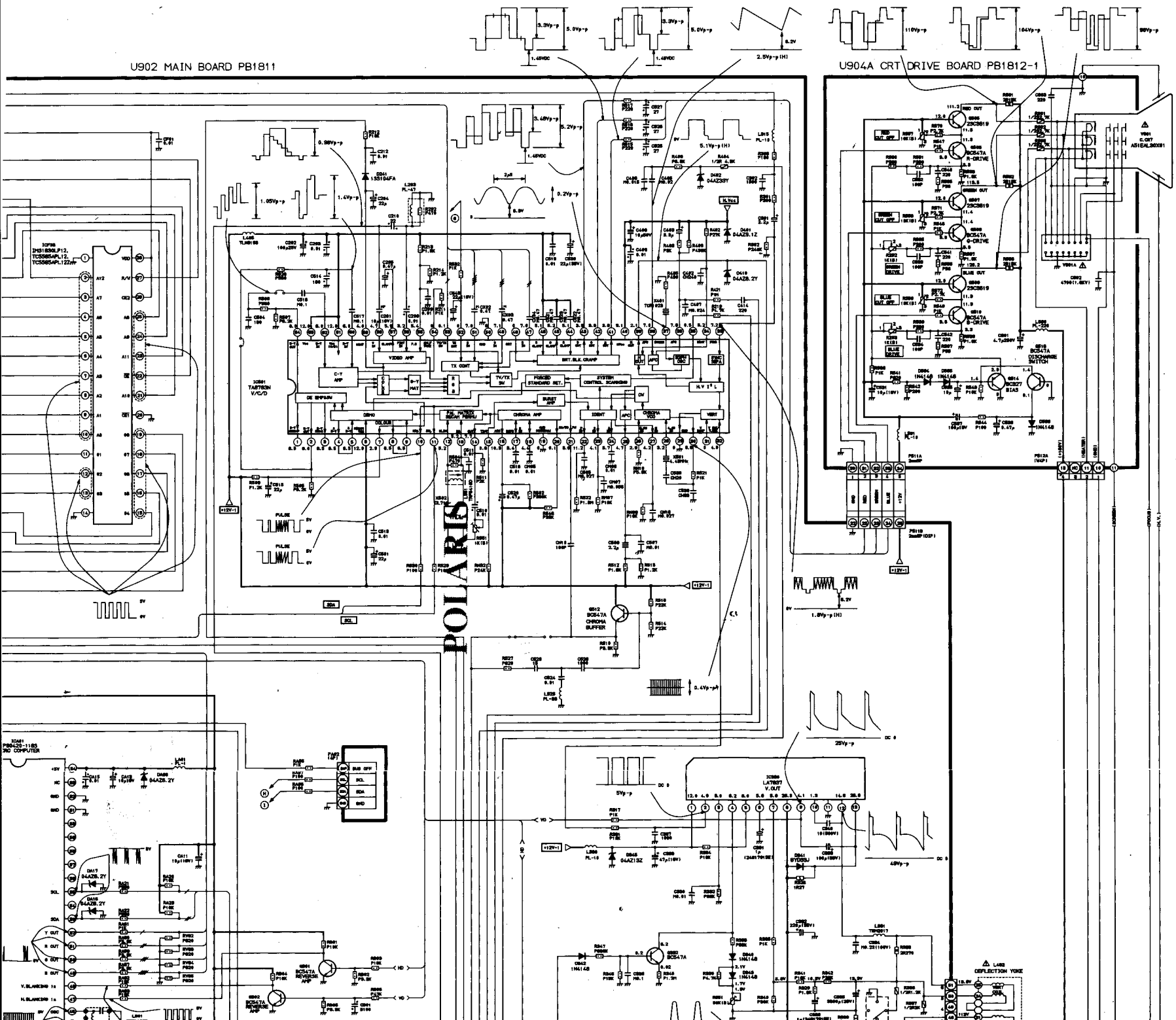
U902 MAIN BOARD PB1811
U904A CRT DRIVE BOARD PB1812-1
POLARIS
IC901 TA8783N V/C/D
IC906 LA7837 V.OUT
IC401 PS6420-1165 2ND COMPUTER
V.OUT
CHROMA BUFFER
R-DRIVE
G-DRIVE
B-DRIVE
BIAS
DISCHARGE SWITCH
REVERSE AMP
DEFLECTION YOKE
C.CRT
AS16AL360X01

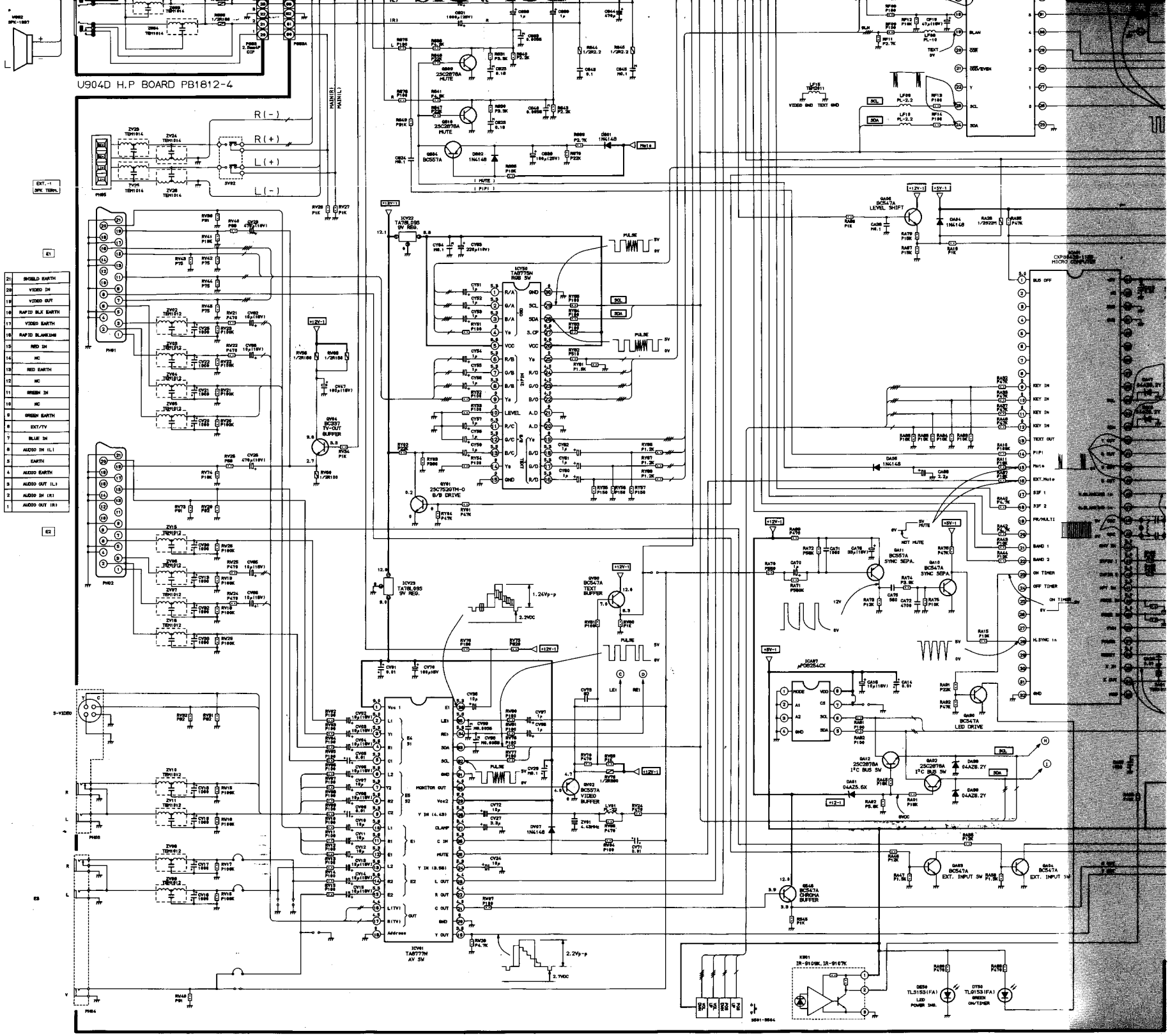
U904D H.P BOARD PB1812-4
R(-)
R(+)
L(+)
L(-)
EXT.-1 SPK TERM.
E1
E2
E3
21 SHIELD EARTH
20 VIDEO IN
19 VIDEO OUT
18 RAPID BLK EARTH
17 VIDEO EARTH
16 RAPID BLANKING
15 RED IN
14 NC
13 RED EARTH
12 NC
11 GREEN IN
10 NC
9 GREEN EARTH
8 EXT/TV
7 BLUE IN
6 AUDIO IN (L)
5 EARTH
4 AUDIO EARTH
3 AUDIO OUT (L)
2 AUDIO IN (R)
1 AUDIO OUT (R)
3-VIDEO
ICV22 TA78L05 5V REG.
ICV23 TA78L05S 5V REG.
ICV56 TA8777N RGB SW
ICV61 TA8777N AV SW
2SC2878A MUTE
BC557A
1N4148
2SC7520TM-0 B/D DRIVE
BC337 TV-OUT BUFFER
BC547A TEXT BUFFER
BC547A VIDEO BUFFER
BC547A LEVEL SHIFT
BC557A SYNC SEPA.
BC547A SYNC SEPA.
BC547A LED DRIVE
2SC2878A I²C BUS SW
BC547A EXT. INPUT SW
BC547A 2SB601A BUFFER
CXP84A1108 MICRO COMPUTER
BUS OFF
KEY IN
TEXT OUT
PIP1
Mute
EXT.Mute
SIF 1
SIF 2
FR/MULTI
BAND 1
BAND 2
ON TIMER
OFF TIMER
H.SYNC In
GND
ICA87 μPD6254CX
IR-9108K,IR-9167K
TL51S3(FA) LED POWER SWD.
TL91S3(FA) GREEN ON/TIMER
PULSE
1.24Vp-p
2.2VDC
2.2Vp-p
2.7VDC

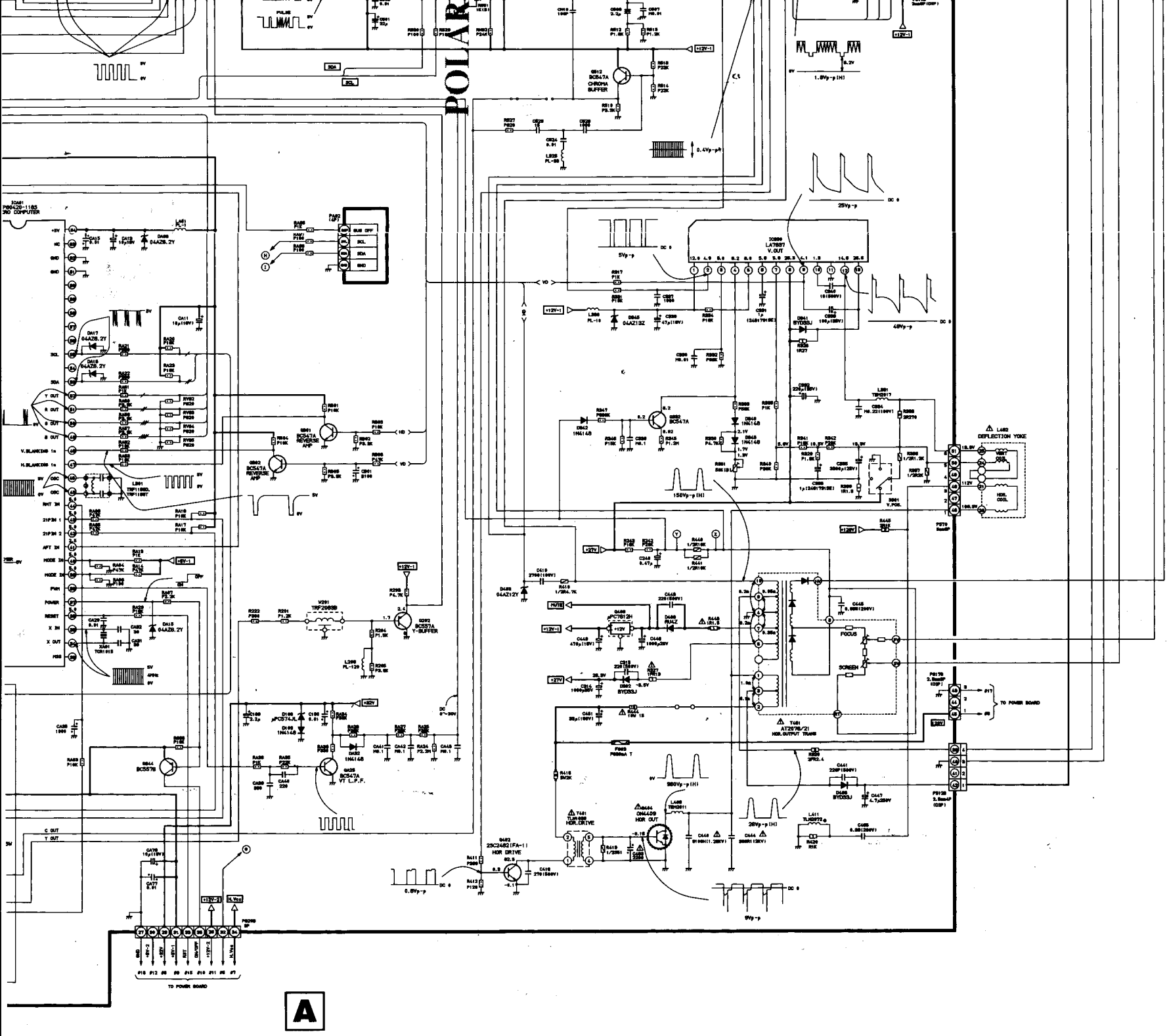
POLAR
CHROMA BUFFER
REVERSE AMP
Y-BUFFER
VT L.P.F.
HOR. DRIVE
HOR. OUT
V. OUT
DEFLECTION YOKE
FOCUS
SCREEN
TO POWER BOARD
A