ORDER NO. MTC9903012C1
B2

Service Manual

Color Video Projection System

Main Manual
(P3)

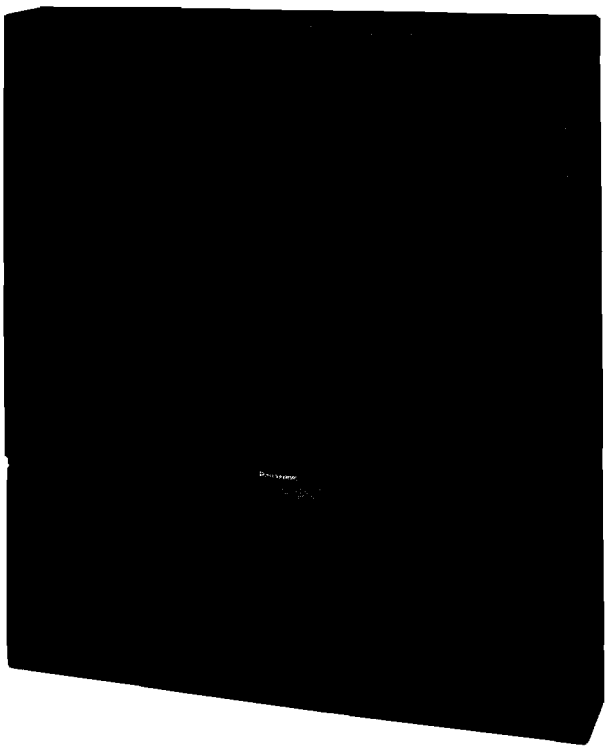

Panasonic

Models	Chassis
PT-51G44A	**AP815**
PT-51G44CA	**AP815**
PT-51G54A	**AP815**
PT-51G54CA	**AP815**
PT-61G54A	**BP815**
PT-61G54CA	**BP815**

Note: Refer to Technical Guide (P3) for functional descriptions and Block Diagrams. **(MTC9703689G1).**

This Service manual is issued as a service guide for the models of the **P3** family listed above. Included in this manual are a set of schematic, block diagrams, functional descriptions, alignment procedures, disassembly procedures, and a complete parts list.

"**WARNING!** This Service Manual is designed for experienced repair technicians only and is not designed for use by the general public. It does not contain warnings or cautions to advise non-technical individuals of potential dangers in attempting to service a product. **Products powered by electricity should be serviced or repaired only by experienced professional technicians.** Any attempt to service or repair the product or products dealt with in this Service Manual by anyone else could result in serious injury or death."

The service technician is required to read and follow the "**Safety Precautions**" and "**Important Safety Notice**" in this Main Manual.

Panasonic®

Copyright 1999 by Matsushita Electric Corporation of America. All rights reserved. Unauthorized copying and distribution is a violation of law.

Table of Contents

Important Safety Notice 2

Safety Precautions 2
Important Safety Test 3

Service Notes 5

SPECIFICATIONS

Receivers Feature Table 7

Boards Designations 8

OPERATION

Location of Controls (Receiver)

Receiver Front Control Panel 9

Location of Controls (Remote)

EUR511171B. 10
EUR511110 11

SERVICE

Disassembly for Service 12

Front Decorative Panel Removal 12
Screen Frame Assembly. 12
Bottom Back Cover 13
CRT Replacement. 14
Screen Assemblies 16

Chassis Service Adjustment Procedures . . . 17

Chassis Boards Layout 17
B+ Voltages. 18

CRT Set Up 19

Dynamic Focus Adjustment 19
Focus: Electrical Adj.. 19
Focus: Optical Lens Adj. 19
Centering Magnets Adj.. 20
Horizontal Size Adjustment. 20

Digital Convergence 21

Serviceman Mode (Electronic Controls) 26

Entering Serviceman Mode. 26
Toggle between Modes 26
Exiting the Serviceman Mode 26
Purity Check 27

Service Adjustments (Electronic Controls) 28

Sub-Adjustments. 28
VCJ Cut-Off Adjustments 28
Sub-Brightness Adjustment. 28
Sub-Contrast. 28
CRT DC Bias. 29
Red, Green & Blue Cutoff 29
White Balance Adj. 29
Tint/Color Adjustment 29
Audio Adjustment 30
MTS Circuit Adjustment 30

Service Adjustments (Mechanical Controls) 31

2nd Tuner- VCO Adj.. 31
2nd Tuner- RF- AGC Adj. 31

FOLDOUTS

Schematics, Voltages & Waveforms

A-Board
Left Portion Sheet-1A
Right Portion Sheet-2A
B-Board. Sheet-3A
C-Board. Sheet-2B
D-Board. Sheet-5A
K-Board. Sheet-5A
LR-Board. Sheet-1B
LG-Board. Sheet-1B
LB-Board. Sheet-1B
R-Board. Sheet-5A
S-Board. Sheet-5A
X-Board. Sheet-3B
Y-Board Sheet-3B
YC-Board Sheet-4B
T-Board Sheet-4B

LAYOUTS

A-Board. Sheet-4A
B-Board. Sheet-4A
C-Board. Sheet-2B
D-Board. Sheet-5A
K-Board. Sheet-5A
LR-Board. Sheet-1B
LG-Board. Sheet-1B
LB-Board. Sheet-1B
R-Board. Sheet-5A
S-Board. Sheet-5A
X-Board. Sheet-3B
Y-Board Sheet-3B
YC-Board Sheet-4B
T-Board Sheet-4B

FEATURE TABLE

FEATURE\MODEL	PT-51G44A PT-51G44CA	PT-51G54A PT-51G54CA	PT-61G54A PT-61G54CA
Chassis	P3	P3	P3
Tuning system	40K	40K	40K
# of channels	181	181	181
Menu language	Eng/Span/Fr	Eng/Span/Fr	Eng/Span/Fr
Closed Caption	X	X	X
V-Chip	X	X	X
75 Ω input	X	X	X
Picture In Picture	2T	2T	2T
Remote Model #	EUR511110	EUR511171B	EUR511171B
Protector of Screen	–	X	X
Comb Filter	3DIG	3DIG	3DIG
V/A norm (X=both)	X	X	X
Dyn Color/Peak Wht	X	X	X
Digital Convergence	X	X	X
MTS/SAP/DBX	X	X	X
Bass/Bl/Treb Control	X	X	X
AI Sound (DXL:*,SMPL:X)	X	X	X
Surround	X	X	X
Built-in audio power	10W/CH (10%)	10W/CH (10%)	10W/CH (10%)
# of speakers	2	2	2
A/V in (rear/front)	(2/0)	(2/0)	(2/0)
S-VHS IN (rear/front)	1/0	1/0	1/0
Audio Out (F:FAO;V:VAO	F,V	F,V	F,V
Dimensions mm (WxDxH) in	1098x633x1329 43.15x24.87x52.22	1098x633x1329 43.15x24.87x52.22	1316x704x1513 51.71x27.66x59.4
Weight (kg/lbs)	92/202.4	92/202.4	116/255.2
Power source (V/Hz)	120/60	120/60	120/60
Anode voltage	31.5kV ± 1.0kV	31.5kV ± 1.0kV	31.5kV ± 1.0kV
Video input jack	$1V_{p-p}$ 75Ω, phono jack	$1V_{p-p}$ 75Ω, phono jack	$1V_{p-p}$ 75Ω, phono jack
Audio input jack	500mV RMS 47kΩ	500mV RMS 47kΩ	500mV RMS 47kΩ

Table 1: Feature Table

Specifications are subject to change without notice or obligation.
Dimensions and weights are approximate.

Boards Designation

Board	Part Number	[redacted]
A-Board	TNP2AH010AC	Main Chassis
B-Board	TNPH0121AF	Power Supply
C-Board	TNPA1513	Convergence
D-Board	TNPA0609	Protection Circuit
K-Board	TNPA0614	Costumer Controls
LR-Board	TNPA0610	Red CRT Board
LG-Board	TNPA0611	Green CRT Board
LB-Board	TNPA0612	Blue CRT Board
R-Board	TNPA0615	Remote Sensor
S-Board	TNPA0190AG	2nd Tuner
T-Board	TNP2AA045AB	Line Filter
X-Board	TNPA0613AB	A/V Inputs
Y-Board	TNP2AA009AE	PIP Processing
YC-Board	TNP2AA032	Digital 3-Line Comb Filter

Note: [redacted]

Location of Controls (Receiver)

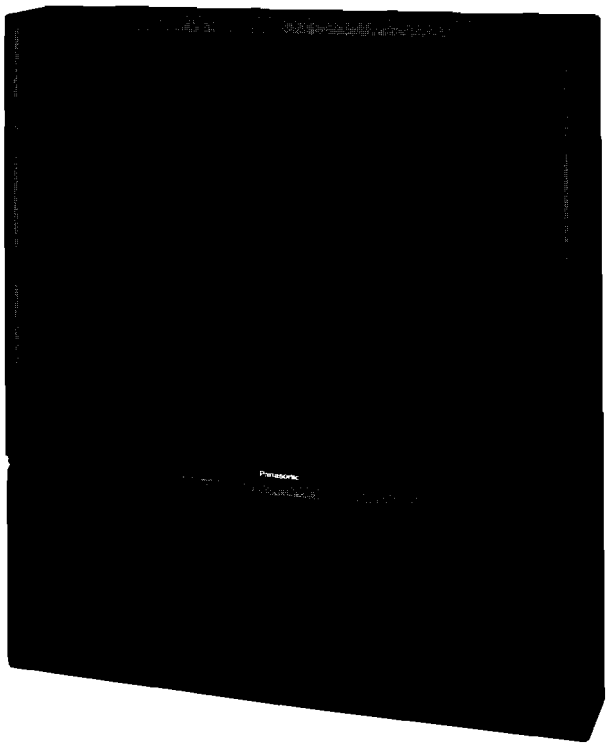

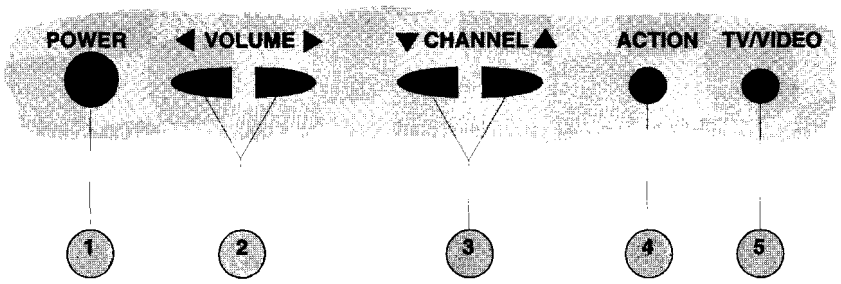

Figure 5. Location of Controls Receiver

Quick Reference Control Operation

Quick Reference Control Operation	
1	**Power Button** - Press to turn ON or OFF.
2	**Volume Buttons** - Press to adjust Sound Level, or to adjust Audio Menus, Video Menus, and select operating features when menus are displayed
3	**Channel Buttons** - Press to select programmed channels. Press to highlight desired features when menus are displayed. Also use to select Cable Converter box channels after programming Remote Control Infra-red codes (the TV/AUX/CABLE switch must be set in CABLE position).
4	**Action Button** - Press to display Main Menu and access On Screen feature and Adjustment Menus.
5	**TV/Video Button** - Press to select TV or one of two Video Inputs, for the Main Picture or the PIP frame (when PIP frame is displayed).

Location of Controls (Remote)

[illegible] Button

Press to turn ON and OFF.

MUTE Button

Press to mute sound.
A second press resumes sound.
Press also to access and delete Closed Caption display.

VCR, DVD, LD/CD, AUX, TV, CBL, DBS, RCVR

Component function buttons

VOL (volume) Buttons

Press to adjust TV sound level.
Use with Channel buttons to navigate in menus.

R-TUNE (Recall Tune) Button

Press to switch to the previous channel.

ACTION Button

Press to display Main Menu and access or exit On Screen features and Adjustment Menus.

REW, PLAY, STOP, FF, FREEZE, PAUSE, SWAP, VCR OPEN/CLOSE

Component function buttons.

[illegible]

DBS function buttons.

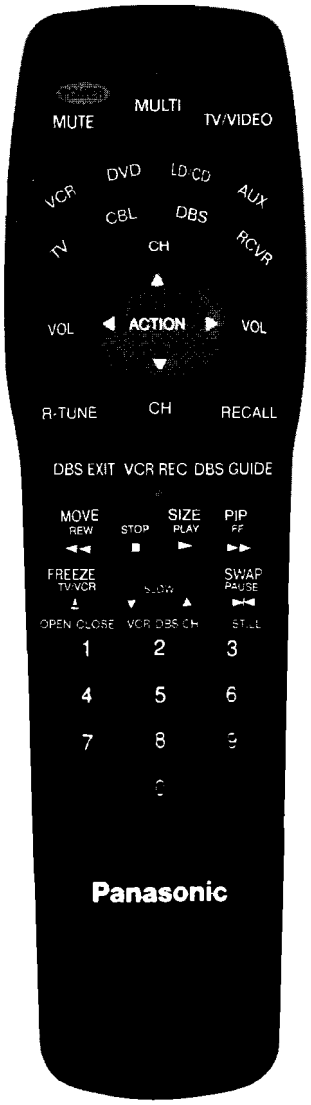

EUR511171B
PT-51G54A/CA
PT-61G54A/CA

[illegible]

Programmable button that can operate up to seven (7) functions at once

TV/VIDEO Button

Press to select TV or Video input.

CH (channel) Buttons

Press to select channels.
Use with volume buttons to navigate in menus.

[illegible]

DBS function buttons.

[illegible]

Press to display Time, status of Sleep Timer, Channel, Video mode and Channel Caption (Station Identifier).

[illegible]

DVD function buttons.

[illegible]

Press numeric keypad to select any channel.

Figure 6. Location of Controls (Remote)

For additional information on the Remote and its operation, please refer to the Owner's Guide, [illegible] the parts list.

Location of Controls (Remote)

POWER Button

Press to turn ON and OFF.

MUTE Button

Press to mute sound.
A second press resumes sound.
Press also to access and delete Closed Caption display.

TV CABLE VCR DVD/LD

Component function buttons

VOL (volume) Buttons

Press to adjust TV sound level.
Use with Channel buttons to navigate in menus.

R-TUNE (Rapid Tune) Button.

Press to switch to the previous channel.

ACTION Button

Press to display Main Menu and access or exit On Screen features and Adjustment Menus.

REW, PLAY, FF, TV/VCR, STOP, PAUSE, REC, VCR CHANNEL

Component function buttons.

EUR511110
PT-51G44/C

MULTI Button

Programmable button that can operate up to seven (7) functions at once

TV/VIDEO Button

Press to select TV or Video input.

CH (channel) Buttons

Press to select channels.
Use with volume buttons to navigate in menus.

RECALL Button

Press to display Time, status of Sleep Timer, Channel, Video mode and Channel Caption (Station Identifier).

"0" - "9"

Press numeric keypad to select any channel.

Figure 7. Location of Controls (Remote)

For additional information on this Remote and its operation, please refer to the Remote Guide, listed on the parts list.

Disassembly for Service

Note: Board ground wires may have to be disconnected to disassemble some boards. All ground wires must be reconnected using jumper leads, if necessary, before power is applied to Receiver for service.

Front Decorative Panel Removal

(See Figure 8.)

1. The Front Decorative Panel is secured by velcro strips. Grip the panel from the sides and pull forward to remove.
2. The Front Cover is secured by screws.

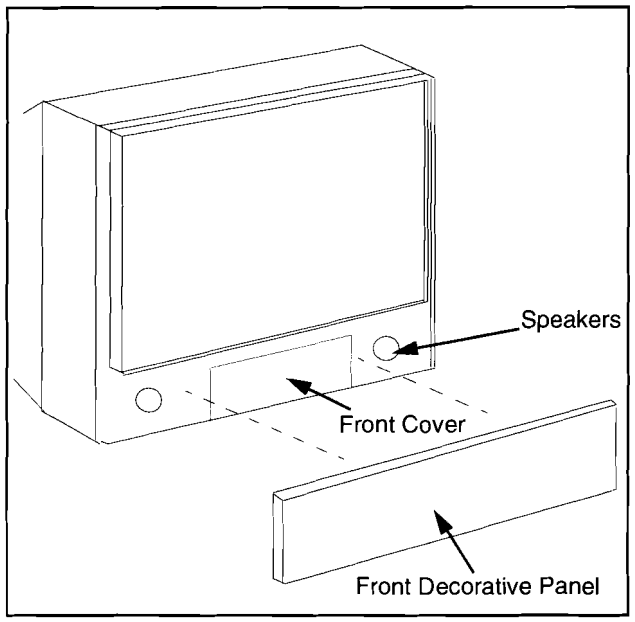

Figure 8. Panel Removal.

Screen Frame Assembly (See Figure 9)

1. Remove the front decorative panel. (see Figure 8)
2. Remove 4 screws from the bottom edge of the frame.
3. Unplug the keyboard cable from the bottom of the screen frame.
4. Grasp the frame on the sides at the bottom. Pull forward at bottom, push up frame then pull out top edge.

Screen (See Figure 10)

1. Place frame face down on soft surface.
2. Remove Frame Channel from top edge.
3. Remove screen brackets.
4. Remove K-Board.

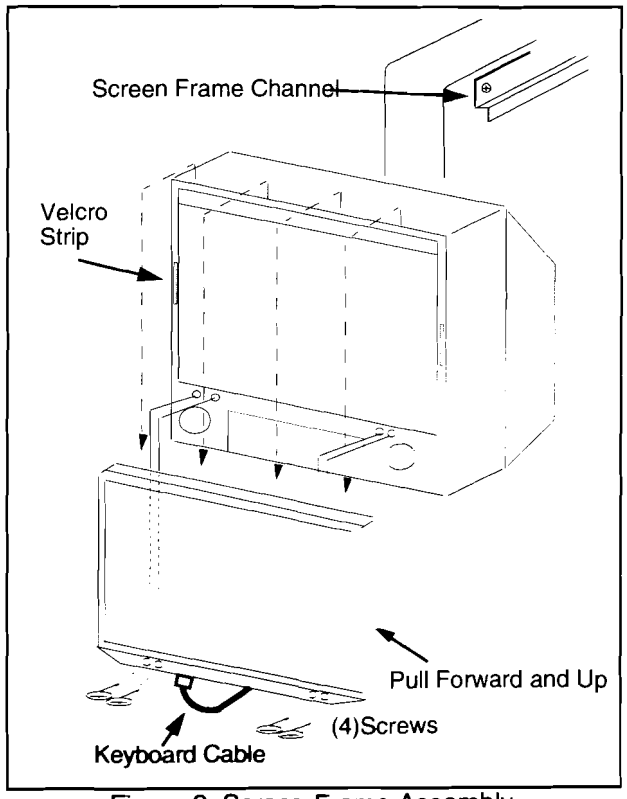

Figure 9. Screen Frame Assembly.

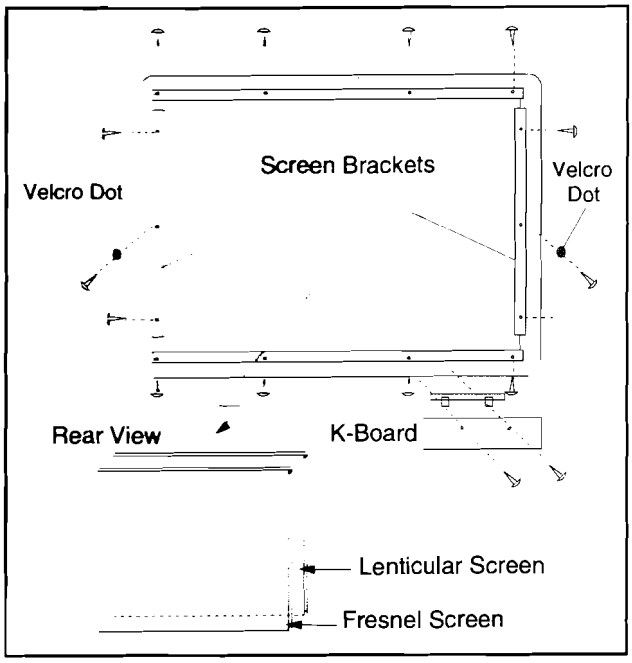

Figure 10. Screen Assembly

Disassembly for Service (Cont.)

Disassembly of Speaker Units Replacement

1. Remove the front decorative panel located under control panel. (see Figure 8)
2. Each Left and Right speaker is secured to the cabinet with (4) screws for each bracket.
3. Disconnect the R & L speaker lead connectors from the speaker units.

Bottom Back Cover (Figure 11)

1. Remove (8) hex screws around its perimeter (marked with arrows).
2. Remove (3) screws from around the A/V terminal board (marked with arrows).

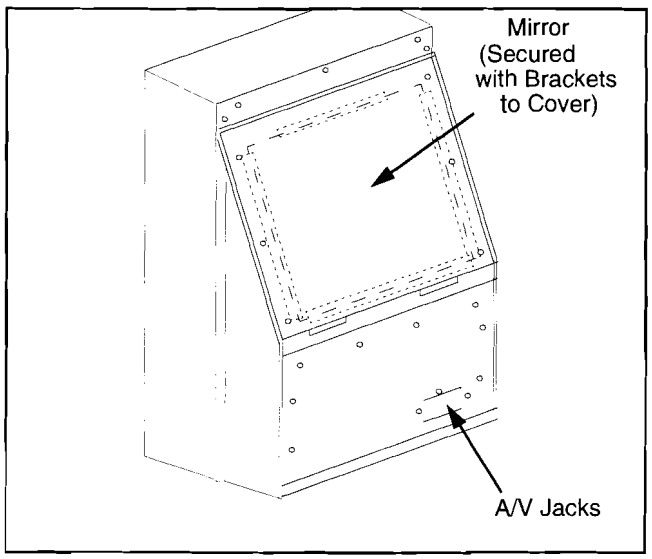

Figure 11. Back Covers Removal

Back Cover Assembly (Figure 11)

1. The top back cover is secured with (6) screws around its perimeter.
2. Lift bottom cover up and pull out at the bottom.
3. Be careful not to damage the mirror attached to the underside of cover.

Main Chassis Block (Figure 12)

1. Remove Front Decorative Panel and Front Cover. (Figure 8)
2. Remove the Bottom Back Cover. (Figure 11)
3. The main chassis Block is secured to the cabinet by (4) screws (2 at front, behind the decorative panel, 2 inside on bottom of optical frame).
4. Remove Wires (K1 connector and Speaker connectors, A8 & A9, on A-Board) and Pull out the Main Chassis Block.

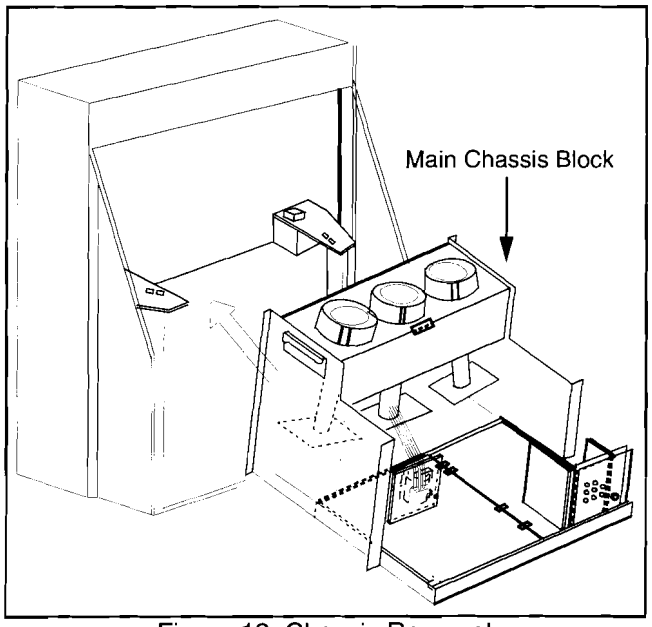

Figure 12. Chassis Removal

Note: *Main Chassis block can be serviced either in normal position or laying on its back side (Protect hookup terminal from damage).*

Disassembly for CRT Replacement

To facilitate CRT replacement, the complete CRT mounting chassis does not need to be removed.

1. Remove the main chassis block from the cabinet (Figure 12),
2. Remove the Optical bracket metal cover (rear side) by removing (6) screws from back, (2) screws from top, and (2) screws from each side. (Figure 13)

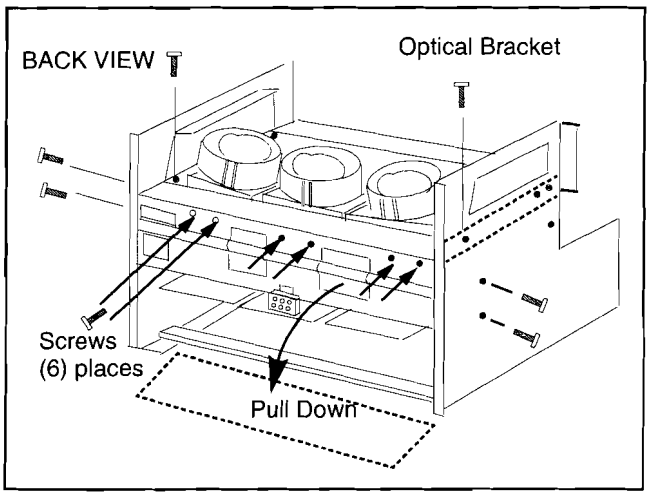

Figure 13. CRT Replacement

Disassembly for Service (Cont.)

3. Remove the defective CRT anode lead from the high voltage distributor block that is mounted on the Flyback Transformer. Discharge to CRT chassis.
4. Unplug connectors from the B-Board. (See board layout.) B9 for Red, B10 for Green, or B11 for Blue.
5. Unplug the defective CRT black Dag ground connector from the CRT Board.
6. Remove the CRT Board from the defective CRT neck.
7. Remove (2) screws from the defective CRT housing (Figure 14).**

   CAUTION: Do not remove the (4) CRT lens screws.

8. Release CRT anode lead from CRT chassis wire clamp and all other wires from holders.
9. Loosen a screw that secured the DY and remove it from the CRT neck.

X-RAYS SHIELD ⚠

10. To insure X-Rays radiation protection, the lens must be mounted in place at all times when power is applied to the receiver.

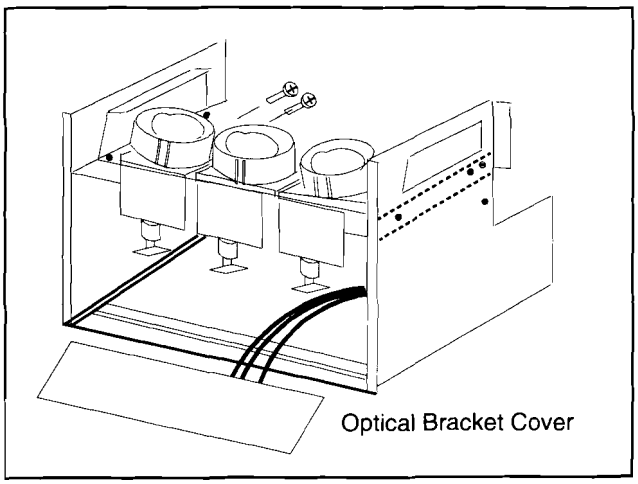

Figure 14. CRT Replacement.

CAUTION: Support the CRT Assembly when loosening screws.

CRT Replacement

1. Remove CRT focus lens assembly (4 screws).

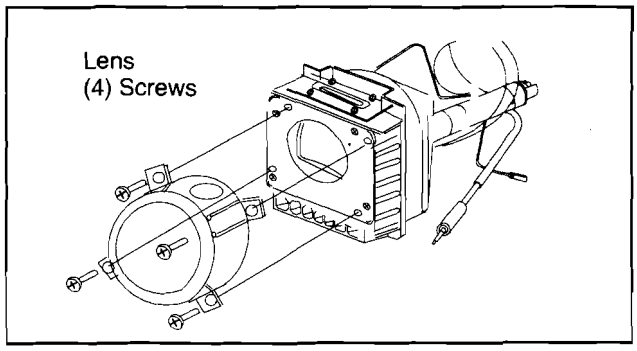

Figure 15. CRT Assembly.

2. Lay CRT face down on a soft cloth.
3. Note position of yoke with centering tabs and remove from defective CRT.
4. Remove CRT Dag ground from defective CRT. Mount it on the replacement CRT exactly as it was on the defective CRT.

   Note: *Replacement CRT comes with H.V. anode lead attached.*

5. Wire the anode lead wire.

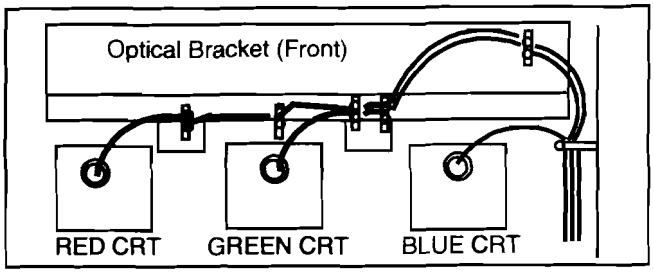

Figure 16. Wire Guide.

6. Install yoke with other CRT neck assemblies on CRT neck in the same order and position as removed from the defective CRT.
7. Press yoke against bell of CRT and tighten the clamp just snug enough so it will not easily shift.
8. Assemble CRT focus lens assembly to new CRT with (4) screws. Make sure focus lens adjustment nut is in the same location as on other CRT focus lens.

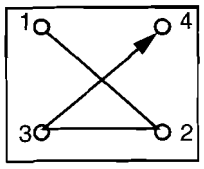

Figure 17. Order of Screws during Assembly.

Note: *Please assemble with screws in the order shown and tighten with the same torque.*

Optical Block Position Adjustment

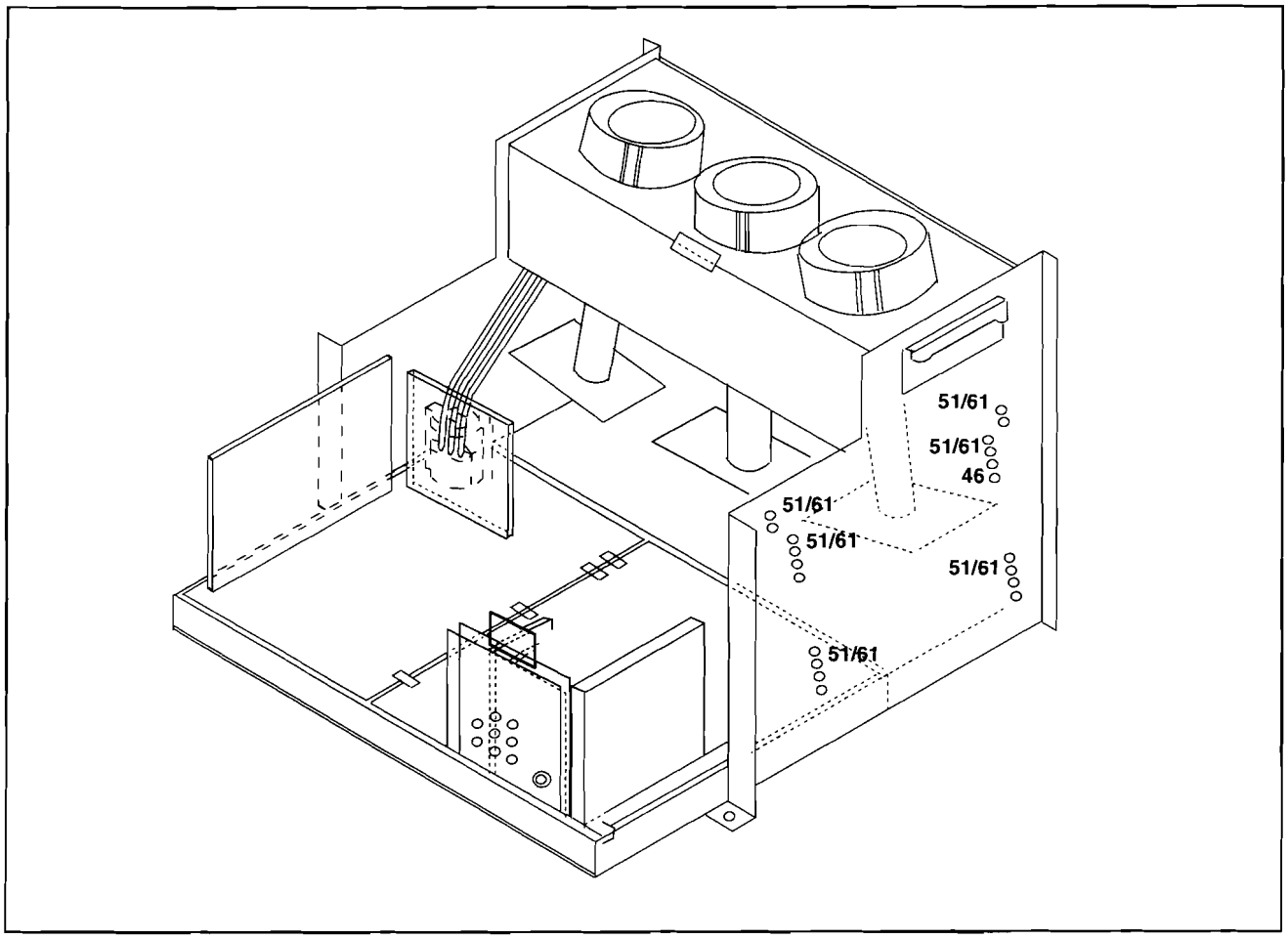

Figure 18. Optical Block Position.

The optical block mounting has holes to allow for the different size projection screens. These mounts will adjust to 61 inch & 51 inch projection screens.

If the optical block is removed for service or is replaced, it is important that the correct mounting holes are used.

PTV SCREEN ASSEMBLIES

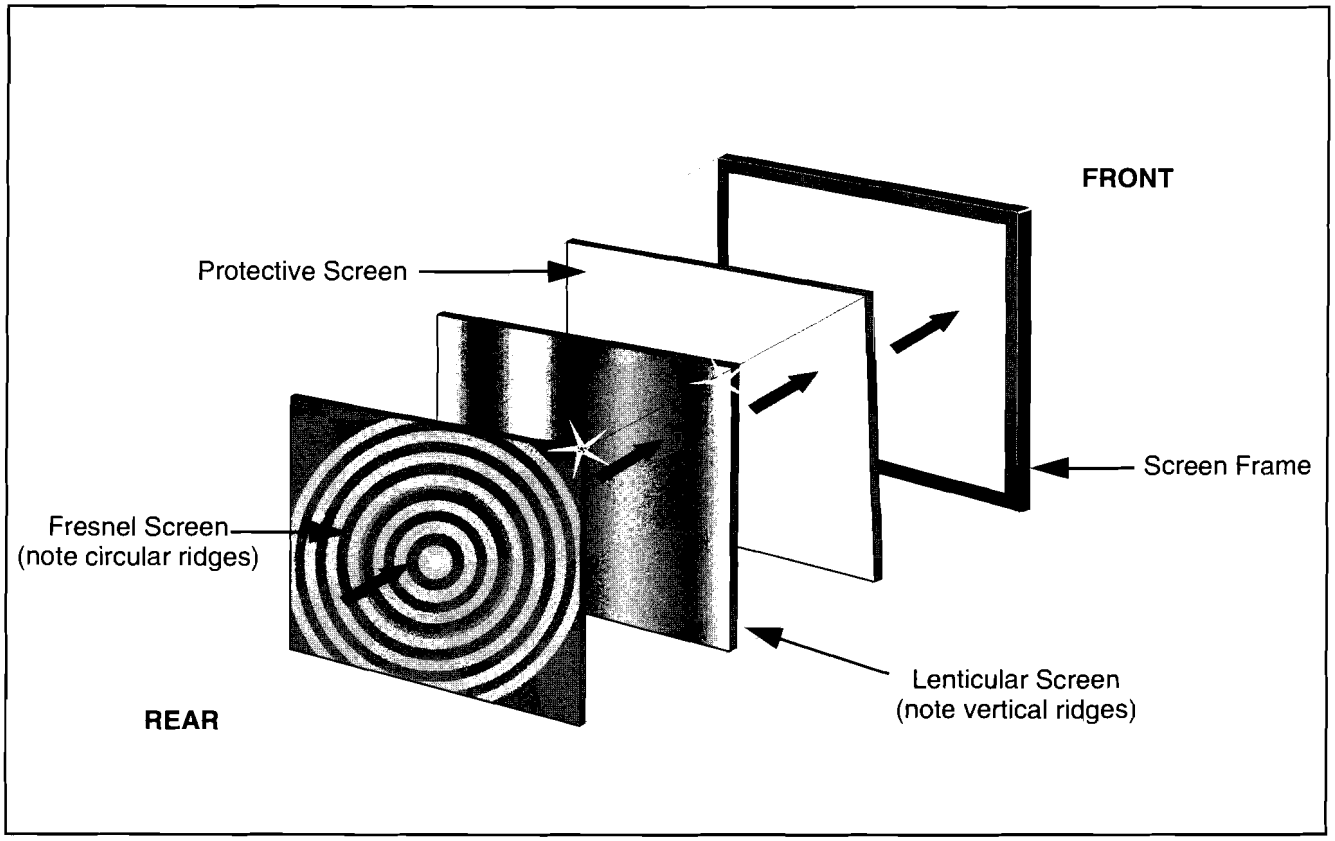

Figure 19. Screen Assemblies.

Note: *The Screen Protector is not used on PT-51G44 C*

IMPORTANT:

For PT-61G54A & PT-61G54CA two matching sets of assemblies for the Fresnel and Lenticular screens are used. The part numbers in each set are:

Set 1 : Fresnel - TKG2AH50181 **Set 2: Fresnel - TKG2AH50231**
Lenticular- TKG2AH50191 **Lenticular- TKG2AH50221**

The screens are not interchangeable. If replacement is required, be sure to replace the screen with an equivalent. The screen part number is imprinted at the bottom corner.

Chassis Boards Layout

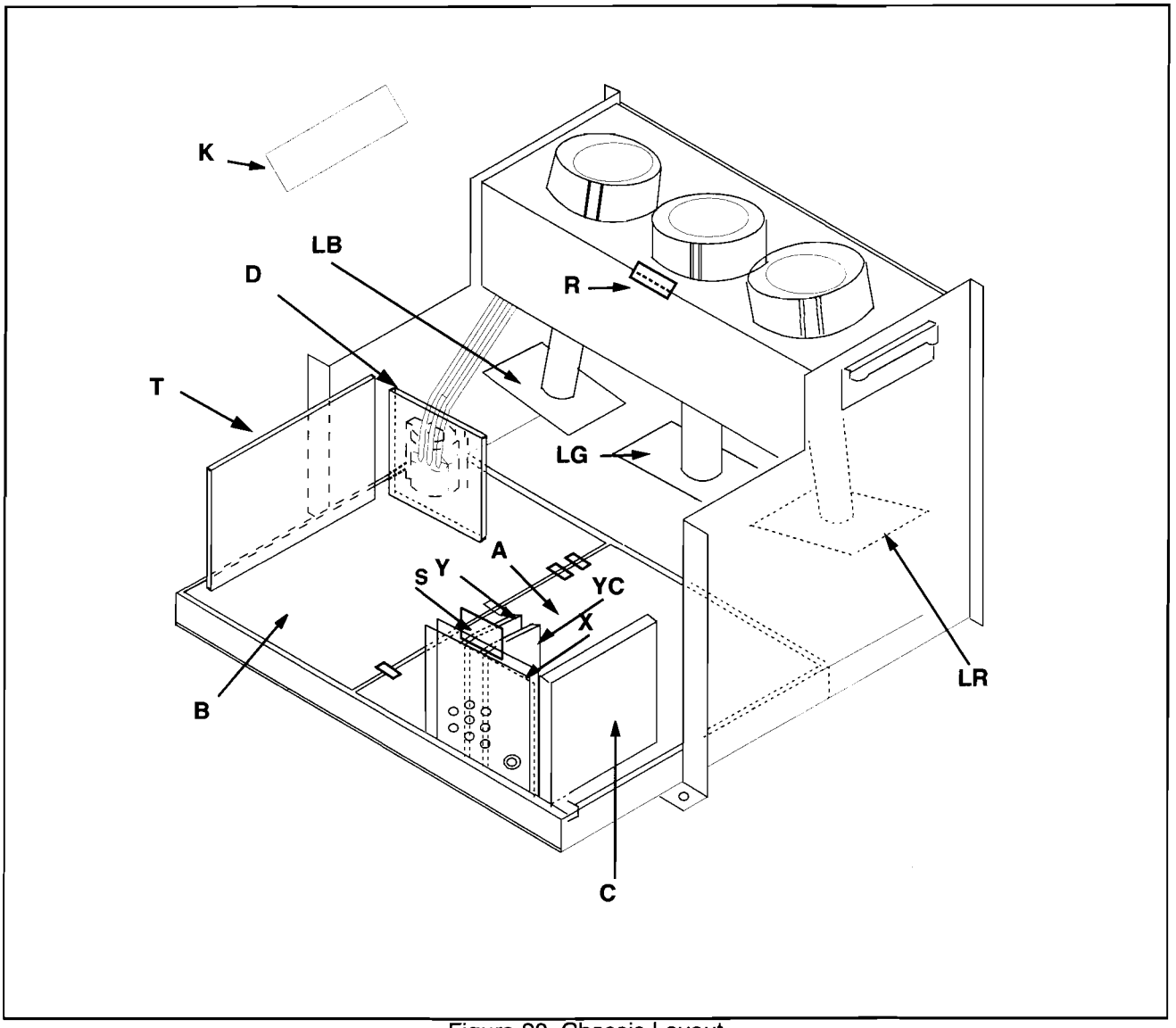

Figure 20. Chassis Layout.

Board Description

A	Main Chassis - MPU, Audio Amp., Convergence Amp. & Voltage Regulation
B	Switching Power Supply, Horizontal Deflection & High Voltage Protector
C	Digital Convergence
D	EHT protector, over deflection blanking, Vertical stop blanking & Diode Modulation drive
K	Customer Control Keyboard

Board Description

LB	Blue CRT Output
LG	Green CRT Output
LR	Red CRT Output
R	Remote Control Board
S	Second Tuner
T	Line Filter
X	A/V Terminals, VAO
Y	PIP Processing
YC	3-Line Digital Comb Filter

Chassis View

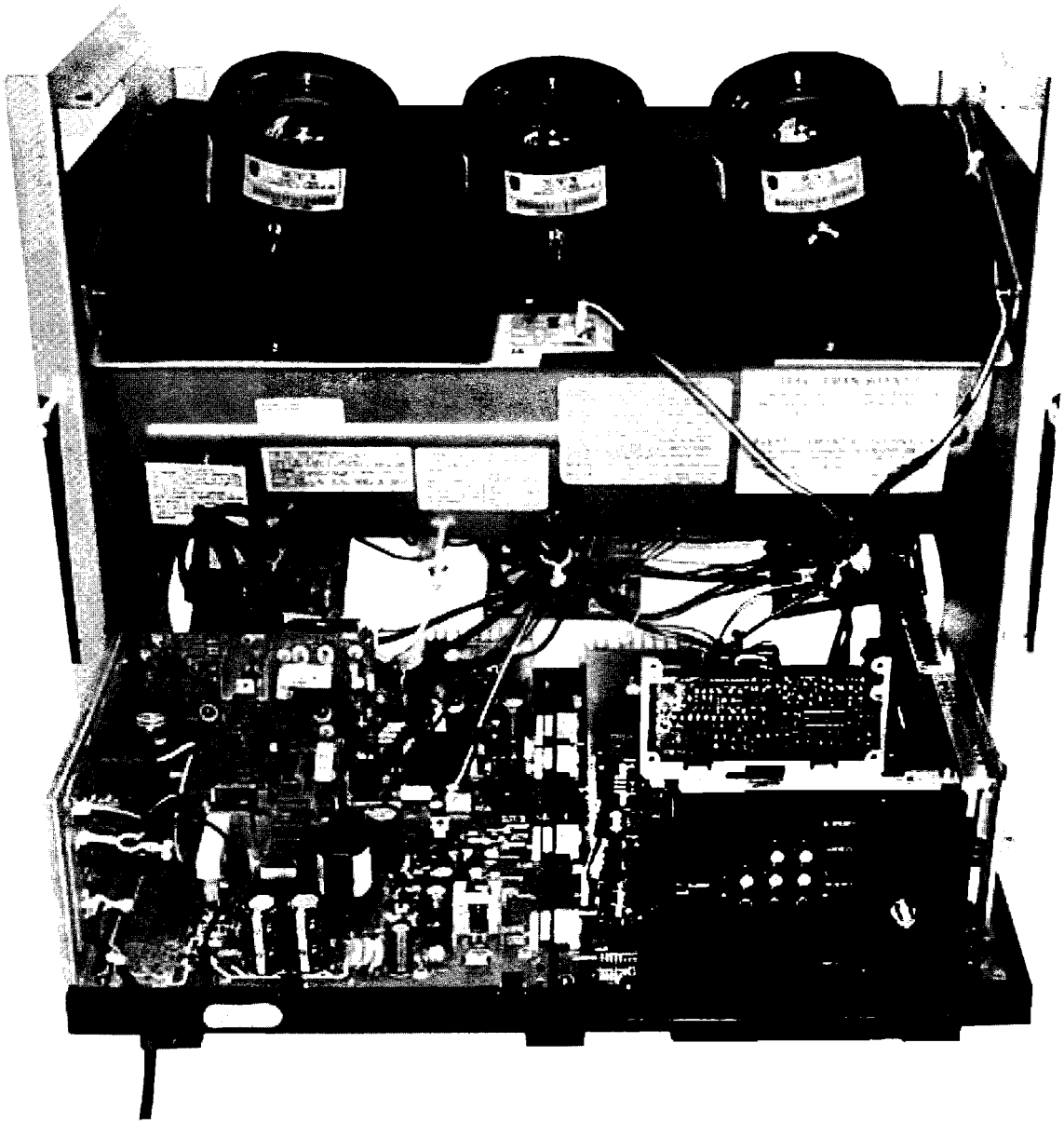

B+ Voltages Table

Preparation:

1. Set the following controls
   Picture.....Normal.
   Bright ..... Normal.
   Volume.....Min. (0).
   Digital Conv. Data.....Default Data.

Procedure:

1. Apply a monoscope pattern.
2. Connect the (-) Lead of the Digital Voltmeter to TPBGND (Cold Ground) on B-Board.
3. Connect the (+) Lead of the Digital Voltmeter to Test Point (On B-Board) and confirm the B+ Voltages (See Following Table).

No.	Test Point	Voltage
1	TPB140	139.0±1.0
2	TPB15	15.0±1.0
3	TPB7	7.5±0.5
4	TP23	23.0±1.0
5	TPB23N	-23.5±1.0
6	TPB32	32.0±1.5

Table 2: B+ Voltages Table

CRT Set Up

CAUTION: Insure yoke plugs on the A-Board are reconnected before turning the Receiver ON to prevent damage to the horizontal output transistor and/or CRTs.

1. Connect test generator to the antenna terminal and set for a monoscope pattern.
2. Loosen yoke clamp, seat yoke against bell of CRT and rotate to correct yoke tilt (compare to adjacent CRT). Tighten yoke clamp.
3. Remove adhesive from centering tabs and set centering tabs for zero correction. (Figure 21)

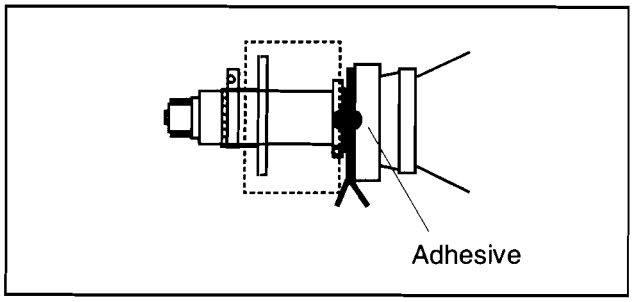

Figure 21. Adhesive Removal

4. Cover replacement CRT lens and static converge the tubes not replaced, if needed. Check size and linearity of pattern and adjust as required.
5. Uncover replacement CRT lens and cover other two CRT lenses. Adjust electrical and optical focus (lens), if required.
6. Uncover all CRT lenses and use yoke centering magnet to converge replacement CRT (in center area of screen only) with other two CRTs. Disregard non-convergence in areas other than center area.
7. Perform White Balance adjustments

Dynamic Focus Adjustment

1. Focus adjustments should be performed after 1 hour of aging.
2. Use oscilloscope with 100: 1 probe.
3. Apply monoscope pattern.
4. Adjust the Red, Blue and Green focus VR on the focus block for best focus of overall picture of each CRT. (Figure 23)

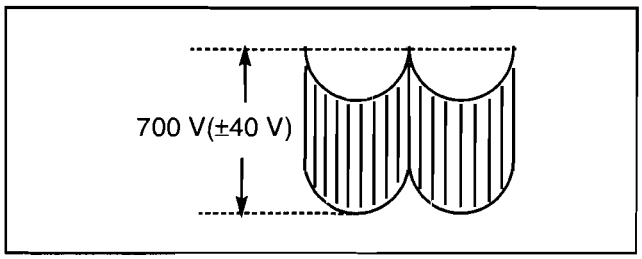

Figure 22. D. Focus Adjustment Waveform

5. Connect the scope probe to TPB20, GND to TPB21. Scope set at 20V/div & 5m sec/dev.
6. Confirm waveform as shown in Figure 22
7. Proceed with Focus Adjustments.

Focus - Electrical Adjustment

1. Cover the Red and Blue CRT, projecting Green only. The electrical focus controls are located on the front. Adjust the Green Focus VR for best focus of overall picture. (Figure 23)

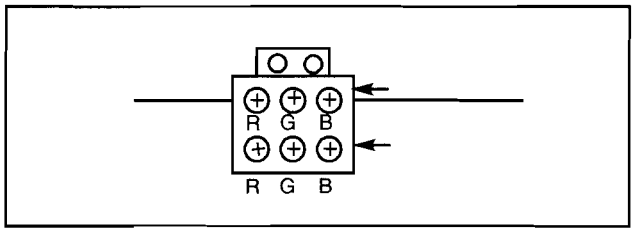

Figure 23. Focus Pack

2. Repeat for Red focus VR while projecting Red only.
3. Repeat for Blue. (Best focus at bottom left corner of screen)

Focus - Optical Lens Adjustment

Note: *This adjustment normally should not require resetting unless the lens has been replaced or adjustment has changed.*

1. Optical focus adjustment is located on the top of each CRT lens system. Loosen the adjustment knurled locking knob. (Figure 24)

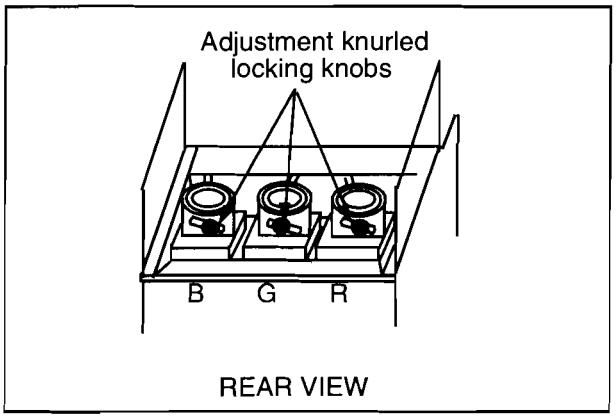

Figure 24. Optical Lens focus Adjustment

2. Turn the Receiver ON. Apply and view a moonscape pattern.
3. Adjust each lens focus for best focus while viewing each CRT.
4. Cover the Red and Blue CRT, projecting green only. Rotate the Green lens for best focus around screen center area.
5. Do the same for the Red focus lens while projecting Red only.
6. Repeat for Blue.

Centering Magnets Adjustment

Horizontal Phase Adjustment

1. Normalize Picture Menu video.
2. Set the receiver to Serviceman Adjustment mode.
3. Apply a monoscope pattern.
4. Cover both red and blue lens so that only the green lens is projecting the monoscope pattern.
5. Adjust H. Size to minimum adjusting DAC V4.
6. Adjust DAC C9 (H. Center) so that the left and right horizontal center line are equal.
7. Use DAC V4 (Horizontal Size) to adjust left and right area to show 5 lines. (Figure 25).

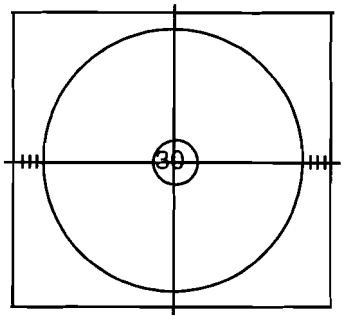

Figure 25. Pattern

Procedures

1. Apply a monoscope pattern.
2. Cover the red and blue lens so only the green lens is projecting the monoscope pattern.
3. In serviceman adjustment mode select DAC:V0 then press "VOL" left or right key to enter the static convergence menu. Adjust all horizontal and vertical RGB data (GV GH, RV, RH, BV, BH to 0).
4. Select DAC V1 and set to 1.
5. Press "0" then "Action" then "5" on remote control.
6. Loosen the deflection coil screw on the Green CRT.
7. Adjust the green pattern to be equal on left and right with the grid horizontal center line. Also adjust for horizontal and vertical tilt.

   Note: *Push deflection coil to top of CRT neck, then tighten deflection screw after adjusting each CRT centering and Tilt.*

8. Uncover the red lens and project red only. Repeat steps 5, 6 and 7.
9. Using the red deflection coil, adjust until the red monoscope pattern center is at the appropriate distance as indicated on Figure 26

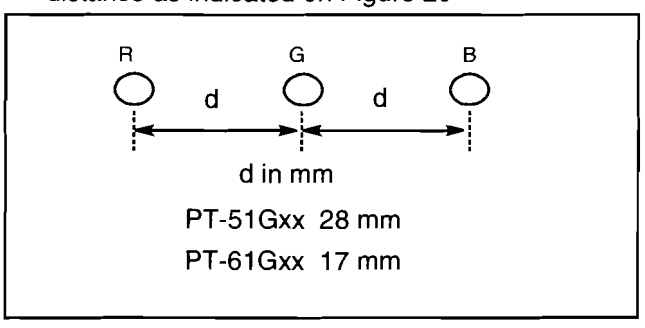

Figure 26. H. Phase Adjustment.

10. Transfer the cap from blue to red, so blue and green are projected.
11. Using the blue deflection coil adjust until the blue pattern center is at the correct distance right from the center of the green cross hatch (Figure 26)
12. Transfer lens cap to project green.
13. Press "TV/Video" on remote control 3 times to display the "OSD Pos ADJ" mode.
14. Adjust the "+" position of OSD to be at the center of pattern by pressing "CH" or "VOL" on remote control.
15. Press "7" then "Action" on remote control.
16. Press "Power" then "Action" on remote control to exit Digital Convergence adjustment mode.
17. Following the adjustment, make sure that all deflection coils are pushed completely toward the CRT cones and that all screws are tightened.

Horizontal Size Adjustment

This is the manual adjustment of horizontal size that is included in the automatic convergence adjustment.

1. Apply a monoscope pattern.
2. Cover both red and blue lens.
3. In serviceman mode, select DAC V1 and press "Volume" key (convergence adjustment mode Turns On).
4. Store current convergence data from template P-1 (working) to template P-2 (storage):
   a. Press the "8" key to enter the copy mode.
   b. Select P-1 with the direction keys.
   c. Press "Action".
   d. Select P-2 using the arrow keys.
   e. Press "Action" to store data.
5. To store the data: Press the "7" key then "Action".
6. To exit convergence adjustment mode: Press "Power" then "Action" .
7. Adjust DAC V4 (H. Size) so that the horizontal size is 5 lines at the right side of the screen.
8. Remove the lens caps from the red and blue lens.
9. To restore original data
   a) Enter the convergence mode again with V1 selection and Volume up key.
   a. Press "8".
   b. Select P-2.
   c. Press "Action".
   d. Select P-1.
   e. Press "Action".
   f. Press "7" and "Action" to save.
   g. Press "Power" and "Action" to exit convergence adjustment mode.

WARNING: To delete all convergence data from memory: Press the "9" key then "Action". Do <u>not</u> perform this operation unless all data is needed to be reentered!

Digital Convergence

The following is a flowchart outlining the procedures for **Digital Convergence.** Use these procedures when replacing the following parts:

- **IC7101** (EEPROM in Digital Convergence Circuit, C-Board)
- any **CRT**
- any **High Voltage Producing Parts**
- any **Part that affects Convergence, when changed**

Note

If one or more of the rasters match the grid pattern on the Convergence Alignment Template, the misaligned rasters may be adjusted to merge with the good ones.

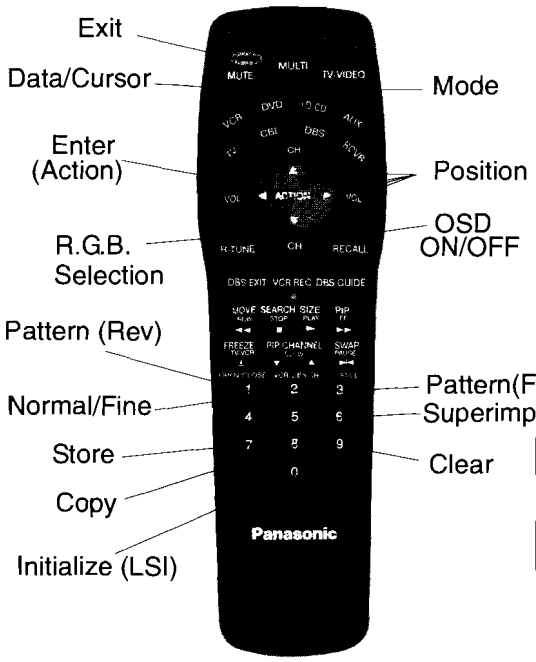

START

TV in Service Mode. Enter "V" Options Adjustment Section.

Entering Service Mode

1.Select Cable Mode.
2.Set Sleep Timer to 30.
3.Select Channel 124.
4.Press Volume Down on TV.
5.Red "CHK" will appear in top left corner.
•If more than 30 minutes are needed, the Sleep Timer can be disabled after entering Service Mode. Precautions should be observed to avoid damage to CRT's.

- **Note:** It may be necessary to inject a monoscope pattern into one of the ANT terminals to complete some of the procedures.
  Set TV to view test pattern before proceeding.
- Press **POWER** button on remote to cycle through Adjustment Options.
- Select "**V**" Options.

Select "V0" and check Static Convergence

- If necessary, press **Channel UP/DOWN** on remote until "**V0**" is displayed.
- Press **Volume LEFT/RIGHT** on remote to enter "V0" **Static Convergence Mode.**

Static Convergence

1. Using the Channel UP/DOWN and Volume LEFT/RIGHT buttons, align the Green Horizontal and Vertical test marks with the Screen Frame mechanical reference marks.
2. Press ACTION button to cycle through options and exit Static Convergence Mode.

Are Test Marks Aligned?

NO → **Align Static Convergence**

YES

Select "V1" Point Convergence

- Press **Channel UP/DOWN** on remote until "**V1**" is displayed.
- Press **Volume LEFT/RIGHT** on remote to enter "V1" **Point Convergence Mode.**

Note

When performing a complete convergence alignment, set all data of Static Convergence to 0 (zero). This will create a zero reference when convergence is completed.

Install Alignment Template
See note on next page for more information

Copying Procedures

"**V1**" Point Convergence Mode must be active prior to copying data.

1. Press the Copy Key (**8** on the numeric keypad).
2. Using the **Channel UP/DOWN** buttons, select the plane that is to be copied. Press Enter key (**ACTION** button).
3. Using the **Channel UP/DOWN** buttons, select the destination plane. Press Enter key (**ACTION** button).

A

Helpful Hint

There are three "planes" or storage areas available when adjusting convergence: the Factory Default Plane (FACT), the Actual Plane (P-1), and the Test or Temporary Plane (P-2). **FACT** is the plane that contains the factory baseline and is **only used at the factory. P-1** is the plane that is always active. **P-2** is a storage bin that can be used to store data safely while P-1 is being adjusted. To copy data between the different planes proceed with the steps outlined in the **Copying Procedures.** It is advisable to copy good data from P-1 to P-2 at the start and occasionally during convergence, just in case P-1 gets corrupted during adjustment. Then P-2 can be copied into P-1 and alignment can continue with the uncorrupted data that was last stored.

Digital Convergence (cont.)

Convergence Alignment Template (for P3)

Alignment Template

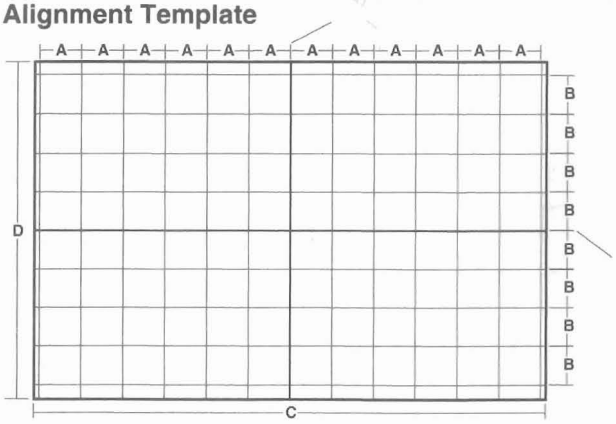

Block Dimensions	Block Dimensions
For 51" Models only	For 61" Models only
A = 85.5 mm	A = 102.8 mm
B = 93 mm	B = 111.2 mm
C = 1040 mm	C = 1234 mm
D = 740 mm	D= 890 mm

Align the Template's Horizontal and Vertical center lines with the TV's Mechanical Test Marks.

The **Convergence Alignment Template** is a grid approximately the size of the viewing screen used to ensure the proper size and shape of the alignment rasters. It is 12 blocks across by 8 blocks high. The grid dimensions will vary according to the size of the screen.

Apply a Convergence Alignment Template to the viewing screen of the TV. Make sure the center lines are properly aligned. If a template is not available, one can be created by following the instructions below.

Create a Convergence Alignment Template by drawing the pattern to the right in the actual dimensions on transparent film or tracing paper. Start with the Horizontal and Vertical Center Axis and work outwards until the pattern is complete. Pay close attention to the actual dimensions of the pattern.

A Convergence Alignment Template, Part No. TQD2AA19013, is available through Matsushita/Panasonic Services

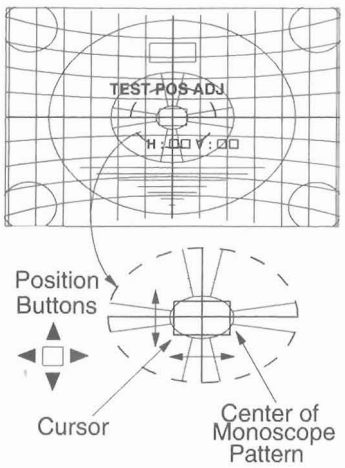

A

Enter "TEST POS ADJ"

- Press Initialize (LSI) key (**0** button on remote) to enter **"TEST POS ADJ"** (Test Pattern Phase Adjustment).
- Press Enter Key (**ACTION** button on remote).

Adjust the cursor over the center of a monoscope pattern

- Press the Superimpose key (**5** on the remote) to view the injected monoscope pattern.
- Using the Position Keys (**Channel UP/DOWN** and **Volume LEFT/RIGHT**), center the cursor over the center of the monoscope pattern.

Enter "DATA PHASE ADJ"

- Press the Superimpose key (**5** on the remote) to stop displaying the monoscope pattern.
- Press Mode key (**TV/VIDEO** button on remote) to cycle through adjustment modes.
- Select **"DATA PHASE ADJ"** mode

Adjust the Height Rise Point

- Using the **Volume LEFT/RIGHT** buttons on remote, position the **Height Rise Point** of the screen center line to the middle of the cursor.
- Press Initialize (LSI) key (**0** button on remote) to exit.

B

Digital Convergence (cont.)

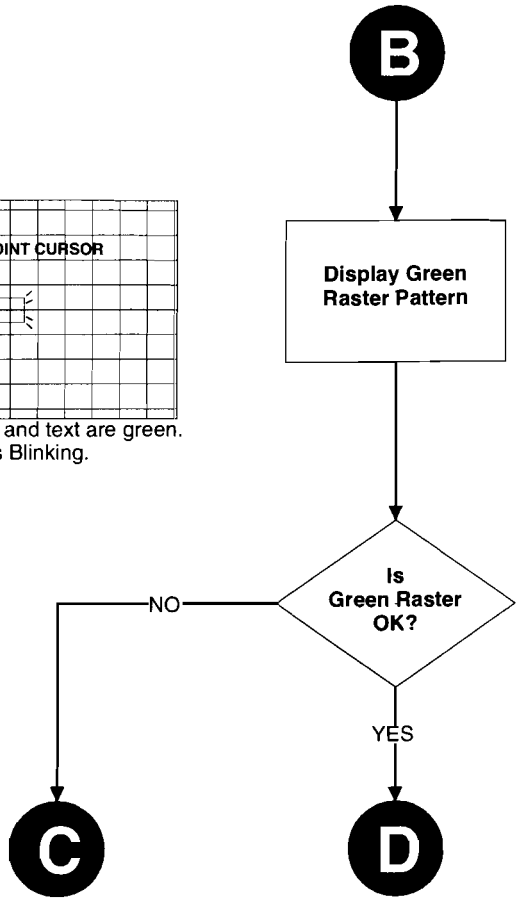

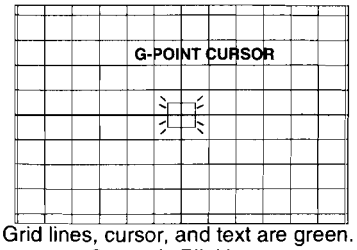

Grid lines, cursor, and text are green.
Cursor is Blinking.

- Press Pattern Keys (**1** or **3** on remote) to cycle through raster patterns (White, Green, Red, Yellow, Blue, and Cyan).
- Stop when the Green raster pattern is displayed.

Helpful Hint

Using **EASY2** straighten lines first. Then adjust for good linearity. If any unique distortion is still visible, use **Point Convergence** to correct raster.

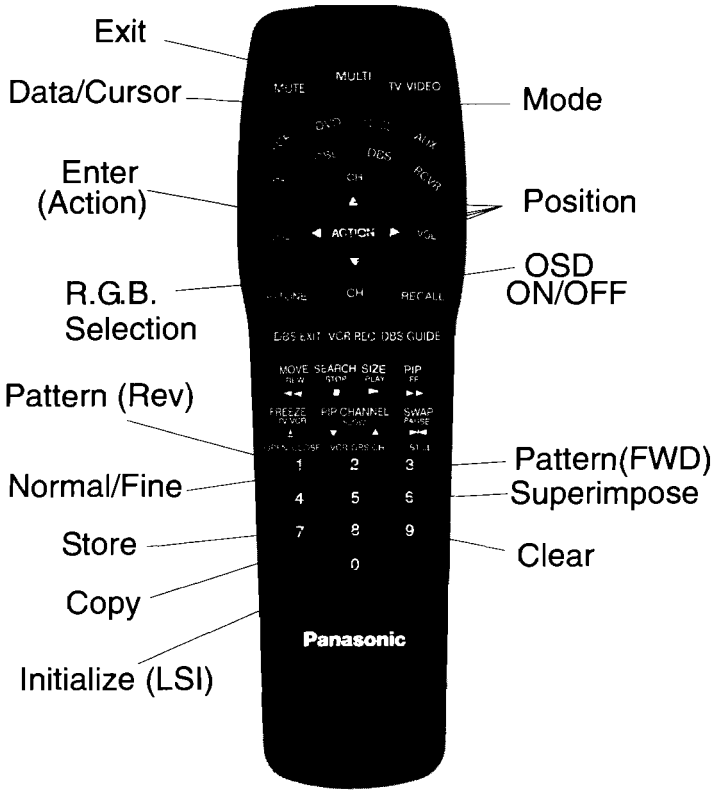

Digital Convergence (cont.)

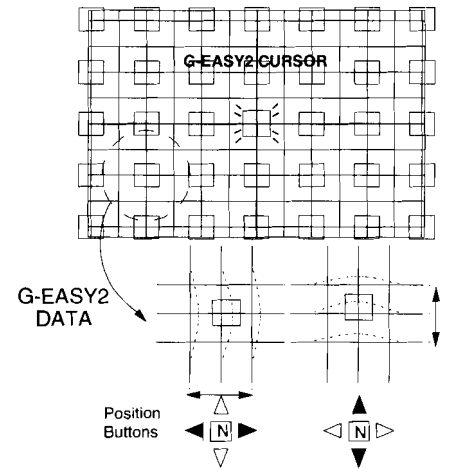

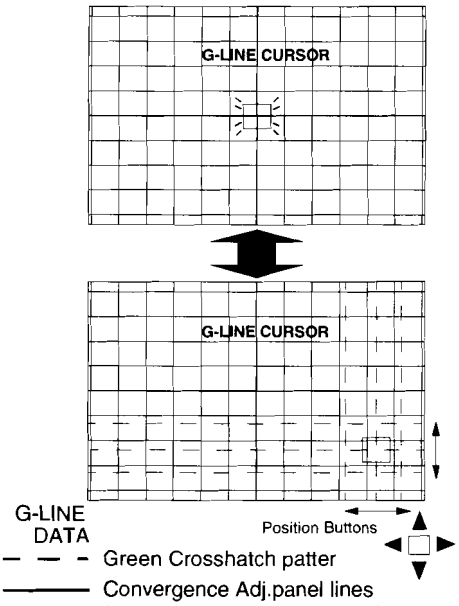

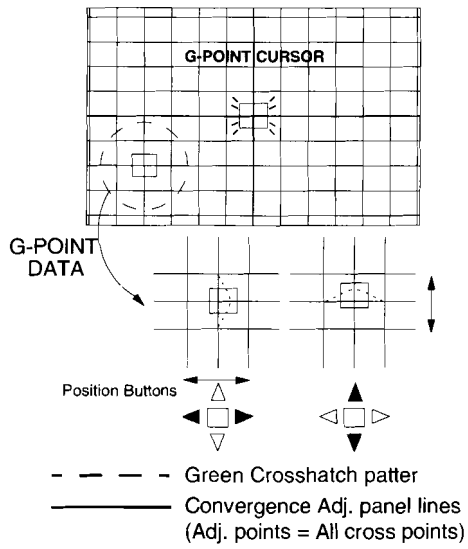

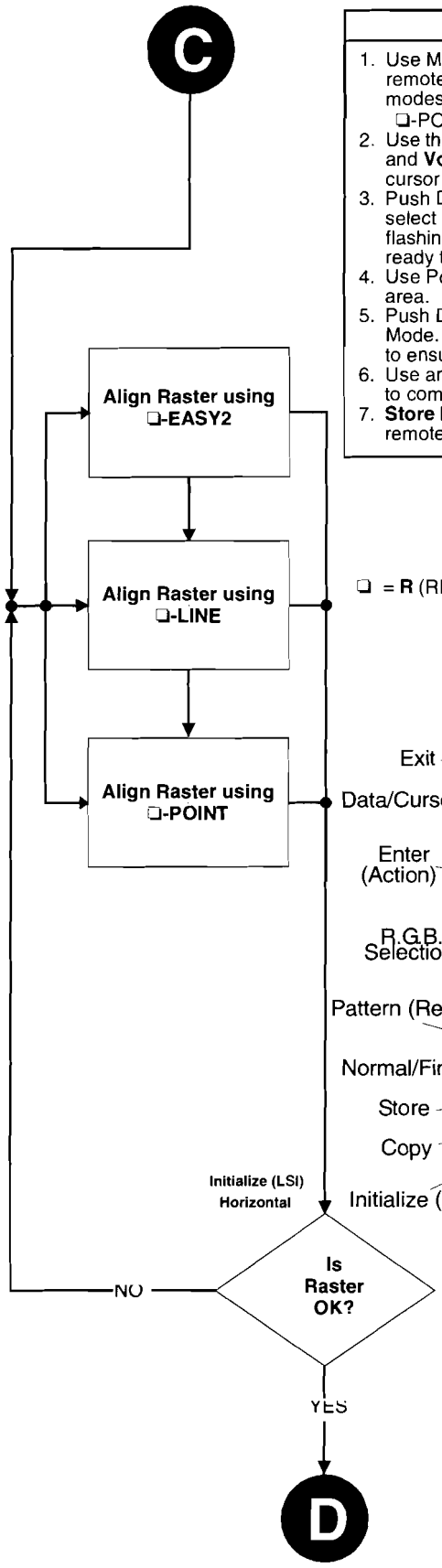

Point Convergence

1. Use Mode Key (**TV/VIDEO** button on remote) to cycle through adjustment modes: ❑-LINE, , ❑-EASY2,❑-PERI-, ❑-POINT.
2. Use the Position Keys (**Channel UP/DOWN** and **Volume LEFT/RIGHT**) to move the cursor to the desired area.
3. Push Data/Cursor Key (**Mute** button) to select Data Mode. The cursor will stop flashing. This indicates that the system is ready to adjust.
4. Use Position Keys to adjust the selected area.
5. Push Data/Cursor key to select Cursor Mode. Repeat steps 2 through 5 as needed to ensure good shape and linearity.
6. Use any combination of adjustment modes to complete convergence.
7. **Store Data often**, using the Store Key (**7** on remote) and Enter Key (**ACTION** button).

❑ = **R** (RED), **G** (GREEN),or **B** (BLUE).

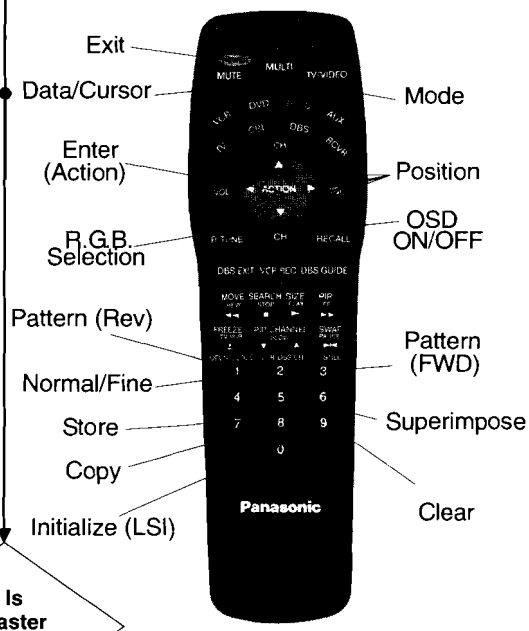

Digital Convergence (cont.)

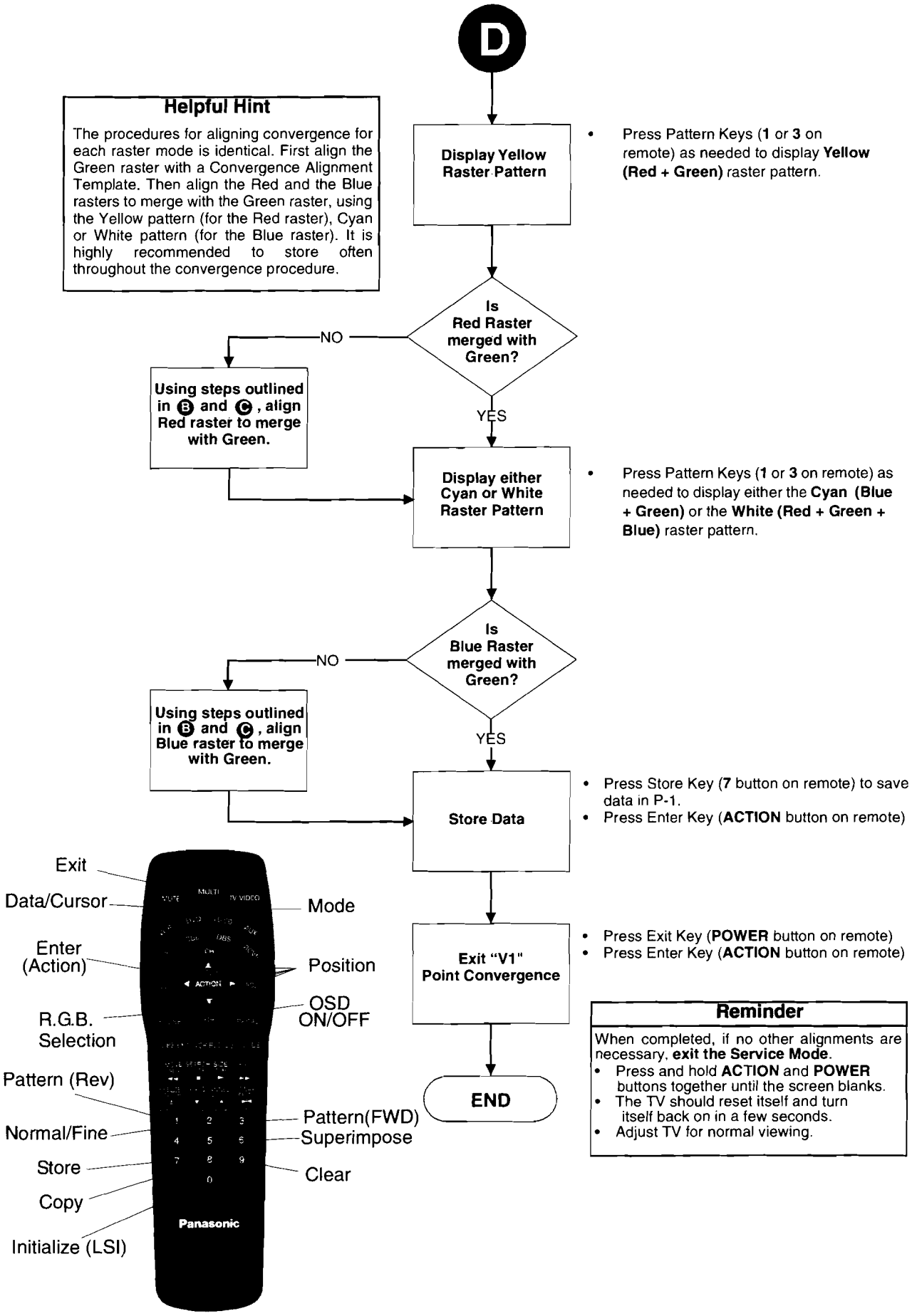

Serviceman Mode (Electronic Controls)

This Receiver has electronic technology using the I²C Bus Concept. It performs as a control function and it replaces many mechanical controls. Instead of adjusting mechanical controls individually, many of the control functions are now performed by using "On Screen Display Menu". (The **Serviceman Adjustment Mode**.)

Note: *It is suggested that the technician reads all the way through and understand the following procedure for Entering/Exiting the **Serviceman Adjustment Mode**; then proceed with the instructions working with the Receiver. When becoming familiar with the procedure, the Flow Chart for Serviceman Mode may be used as a quick guide.*

Quick Entry to Serviceman Mode:

At times when minor adjustments need to be done to the electronic controls, the method of Entering the serviceman Mode without removal of the cabinet back is as follows using the Remote Control:

1. Select SET-UP icon and select CABLE mode.
2. Select TIMER icon and set SLEEP time for 30 Min.
3. Press ACTION button twice to exit menus.
4. Tune to the Channel 124.
5. Adjust VOLUME to minimum (0).
6. Press the VOL ◀ button (decrease) **on Receiver**. Red "CHK" appears in upper corner

To toggle between Aging and Serviceman modes:

While the "CHK" is displayed on the left top corner of the CRT, pressing the Action and the Volume Up buttons on the Receiver simultaneously will toggle between the modes. Red "CHK" for Serviceman and yellow "CHK" for Aging.

7. **Press** the **Power** Button on the **Remote Control** to select one of six Serviceman Adjustment Modes.
   1) **B**= Serviceman VCJ SUB-DATA ADJUSTEMENT.
   2) **C**= Serviceman VCJ CUT-OFF ADJUSTMENT.
   3) **S**= Serviceman OPTIONS (PIP and CLOCK) ADJUSTMENT.
   4) **M**= Serviceman MTS ADJUSTMENTS.
   5) **V** = Serviceman OPTIONAL ADJUSTMENT.
   6) "**CHK**" = Normal operation of CHANNEL ▲▼ and VOLUME ◀ ▶.

Note: *Only the applicable settings for the Receiver serviced will be available (See **a** in Figure 27).*

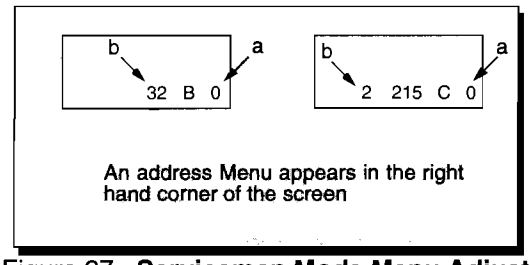

Figure 27. **Serviceman Mode Menu Adjustments.**

Exiting the Serviceman Mode:

Press the **Action** and the **Power** buttons on the **Receiver** simultaneously for at least 2 seconds.

THE RECEIVER EXITS SERVICEMAN MODE.

The Receiver momentarily shuts off; then comes back on tuned to channel 3 with a preset level of sound. Any programmed channels, channels caption data and some others user defined settings will be erased.

IMPORTANT NOTE:
Always Exit the Serviceman Mode Following Adjustments.

To Check Purity:

Press the **Recall** Button on the **Remote Control** when in Serviceman Mode (red "CHK" is displayed) to enter the Purity Field Check Mode.

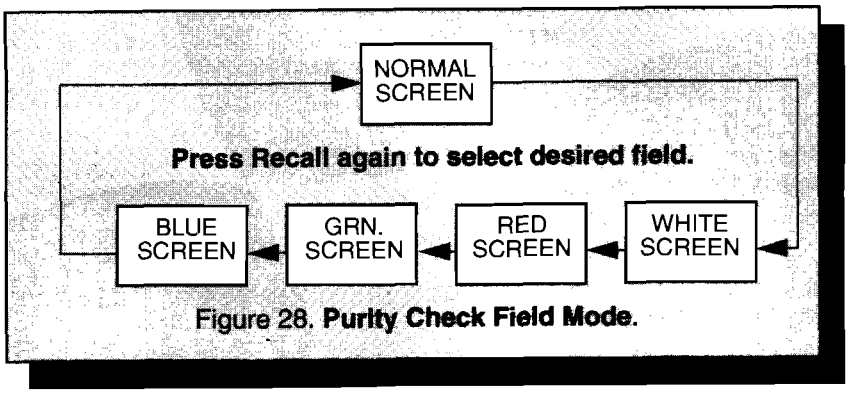

Figure 28. **Purity Check Field Mode.**

Serviceman Mode (Electronic Controls, Cont.)

Important Note:
Write down the original values ("b" in the adjustment mode details, Figure 27) for each address adjustment before modifying values.

Serviceman Sub Adjustments

a. Press

CH ▲▼ buttons on the Remote Control to select any of the 6 Service Sub Adjustment Addresses. ("a" in Figure 27)

b. Press

The ◀ ▶ buttons on the Remote Control to adjust the level of the selected Service Adjustment.

.

Service Adjustment	Adj. Range	Default Level
B0 Sub Color	0 ~ 63	27
B1 Sub Tint	0 ~ 63	50
B2 Sub Brightness	0 ~ 255	50
B3 Sub Contrast	0 ~ 63	25
B4 Sub ETC1	0 ~ 7	5
B5 Video Adjust	0 ~ 15	8
B6 Audio Adjust	0 ~ 31	23

Serviceman VCJ Cut-Off Adjustments

a. Press

CH ▲▼ buttons on the Remote Control to select any of the Service VCJ Cut-Off Adjustment Addresses. ("a" in Figure 27)

b. Press

The ◀ ▶ buttons on the Remote Control to adjust the level of the selected Service Adjustment.

Service Adjustment	Adj. Range	Default Level
C0 RED Cutoff (Low Light)	0~1 0 ~ 255	0 0 ~ 150
C1 GRN Cutoff (Low Light)	0 ~ 255	74
C2 BLU Cutoff (Low Light)	0~1 0 ~ 255	0 78
C3 Red Drive	0 ~ 127	32
C4 BLU Drive	0 ~ 127	43
C5 YNR Switch	0 ~ 1	0
C6 AFT	0~1 0 ~ 255	1 122
C7 RF-AGC	0 ~ 127	64
C8 YNR	0 ~ 7	14
C9 Horizontal-center	0 ~ 31	14
CA Beam limit	0 ~ 7	5
CB Y delay	0 ~ 2	0
CC B.P.F. Switch	0 ~ 1	1

Serviceman MTS Adjustments

Service Adjustment	Adj. Range	Def. Level
M0 MTS input level	0 ~ 63	35
M1 MTS stereo PLL/VCO	0 ~ 63	34
M2 MTS filter	0 ~ 63	27
M3 MTS low level separation	0 ~ 63	37
M4 MTS high level separation	0 ~ 63	23

Sub-Brightness Adjustment

1. This adjustment will require a jumper from TP22 (J107) to ground.

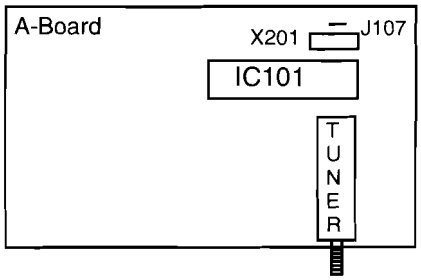

2. Use the one line convergence pattern from the NTSC generator.
3. Set C0 : 0_128, C1 : 100 and C2 : 0_128.
4. Place the scope probe on test point TPA47G (video).
5. Adjust B2 for 3 volts from ground to black level

.

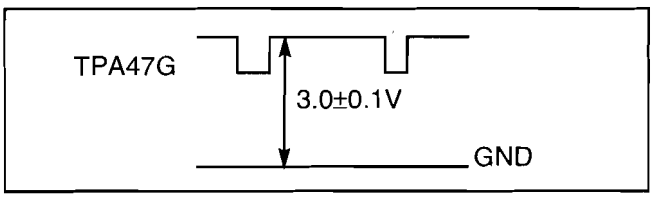

Sub-Contrast Adjustment

1. Apply a cross hatch pattern from the NTSC generator.
2. Confirm that C0 and C2 are 0_128.
3. Connect the scope probe to test point TPA47G.
4. Adjust DAC B3 for 2.6 volts from the horizontal line to black.

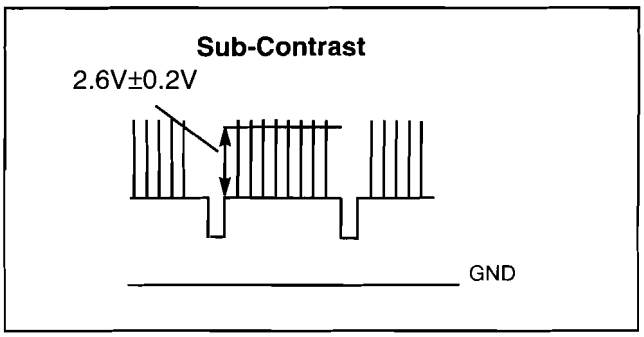

Serviceman Mode (Electronic Controls, Cont.)

CRT DC Bias

1. Use the one line convergence pattern from the NTSC generator.
2. Check the green and red cathode voltages at TPLG1 & TPLR1 for 200 volts from ground to black
3. Check the blue cathode voltage at TPLB1 for 210 volts from ground to black.

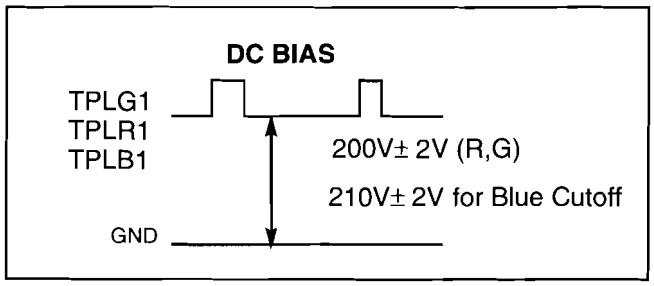

Red, Green & Blue Screen Cutoff

1. Use either a no input signal condition or raster from the NTSC generator.
2. Observing the green tube directly or via a reflective surface, adjust the VR on the green tube for minimum noise.
3. Adjust the noise level in the red and blue tubes to match the noise level in the green tube.

Service Adjustment	Adj Range	Default Level
S0 = PIP color	0~127	125
S1 = PIP contrast	0~127	37
S2 =Upper (1/9)	0~255	25
S3 = Lower (1/9)	0~255	149
S4 = Left (1/9)	0~255	7
S5 = Right (1/9)	0~255	107
S6 = Upper (1/16)	0~255	25
S7 = Lower (1/16)	0~255	165
S8 = Left (1/16)	0~255	7
S9 = Right (1/16)	0~255	124
SA = (Not Applicable)	-	-
SB = Clock adjust	0~255	161
SC = PIP tint	0~63	50
SD = Loudness Comp.	0~63	52

Service Adjustment	Adj Range	Default Level
V0 = Static Digital convergence	-	-
V1 = Dynamic Digital convergence	0~99	0
V2 = Blue gamma	0~255	15
V3 = Vertical size	0~255	89
V4 = Horizontal size	0~255	95
V5 = Sub sharpness	0~99	33

White Balance Adjustment

This adjustment requires that the serviceman use skills in observing what a screen without color should look like.

1. Enter the serviceman mode.
2. Apply a monoscope pattern to one of the video inputs.

High Light White Balance Adjustment

1. Adjust DAC C3 for Red and C4 for Blue adjustments.
2. Make sure the screen is not blue or red. The screen should be white in all areas.
3. Check the monoscope pattern for a black and white picture with even shades of gray and no color tint in the picture.

Low Light White Balance Adjustment

1. Adjust DAC C0 for red and DAC C2 for blue.
2. Check the screen for even white in all areas, no color.
3. Check the monoscope pattern for a black and white picture, even shades of gray and no color tint in the low light areas.
4. Repeat the High Light and Low Light White Balance again until the white balance tracks from high light to low light.

Tint and Color Check

Again, the serviceman ability to see color and the balance of color is important for theses adjustments.

Tint Check

1. In Picture Menu set Picture Norm to YES.
2. Apply color bars to the video input.
3. Magenta is composed of two colors, blue and red.
4. Check to see that magenta does not have too much blue or too much red.
5. Check Cyan. Cyan is composed of blue and green. It should not have too much blue or green.
6. Use a test signal from a VCR or laser disk that has a pre-recorded close up of a signal that has good flesh tones.
7. The signal on the VCR or laser disk should look normal.

Color Check

Using a clean RF or video signal, set the color level so that it does not saturate or appear harsh. Make sure that color is not set so that it appears dull and washed out. Look for natural colors, try to adjust the picture to appear as a normal photograph.

Serviceman Mode (Electronic Controls, Cont.)

Audio Adjustment

Serviceman DAC Adjustment (B6)

This adjustment is factory set and needs to be performed only when IC002 or IC101 is replaced.

Preparation:

1. Apply the following signal at the antenna (70dB ±5dB, 75Ω open P/S 10dB): audio signal set to monaural, 300Hz. 100% modulation; video input of 100 IRE flat field, 30% modulation.
2. Connect the RMS Meter with filter jig as shown in Figure 29.

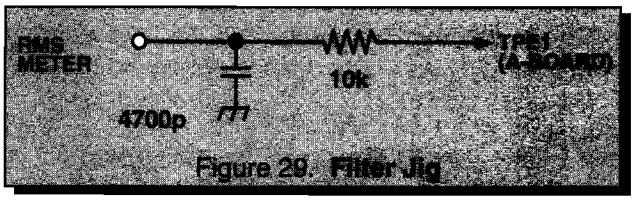

Figure 29. Filter Jig

Procedure:

1. In the Serviceman Mode for making electronic adjustments, select the Audio Adjustment DAC (B6) and adjust until 150mV RMS ± 7.5mV RMS is measured.
2. EXIT the Serviceman Adjustment Mode.

MTS Circuit Adjustments

Note: *It is important to adjust the MTS circuit in the order shown below.*

The MTS Circuit Adjustments require four steps:

1. Stereo VCO Adjustment.
2. Filter Adjustment.
3. Input Level Adjustment.
4. Stereo Separation Adjustment.

Stereo VCO Adjustment (M1)

Preparation:

1. Connect a 1KΩ resistor between TP14 and TPA14(GND)
2. Connect a 22μf, 16V Capacitor between TPE1 ("+" Pin of Cap.) and TPA13 GND (Pin "-" of Cap.)
3. Connect a frequency counter as follows: Positive lead (+) to TPE10 (R-Out), negative lead (-) to TPA13 (GND).

Note: *15 seconds aging is required prior to performing the following procedure.*

Procedure:

Adjust (M1) *MTS-VCO* data (in the Serviceman Adjustment Menu) until the frequency counter measures 15.734kHz ± 50Hz.

Filter Adjustment (M2)

Preparation:

1. Connect a signal generator (sine wave) to antenna.
2. Connect a DVM (AC Range) as follows: Positive lead (+) to TPE1 and negative lead (-) to GND.
3. Connect a scope as follows: Positive lead (+) to TPE11, negative lead (-) to TPA13(GND).

Procedure:

1. Apply the following signal from the signal generator:
   Field strength: 70 ± 5dB, 75Ω OPEN, P/S 10dB
   Video: 100 IRE flat field, 30% modulation.
   Audio: 15.734kHz sine wave.
2. Adjust sine wave signal generator output level (15.734KHz) to obtain 100mV± 5mVrms at TPE1.
3. Adjust MTS filter (M2) data (in the Serviceman Adjustment Menu) until the amplitude of the measured waveform on the oscilloscope is minimum.

Input Level Adjustment (M0)

Preparation:

1. Connect an RMS meter (AC Range) with filter jig as shown in Figure 30.

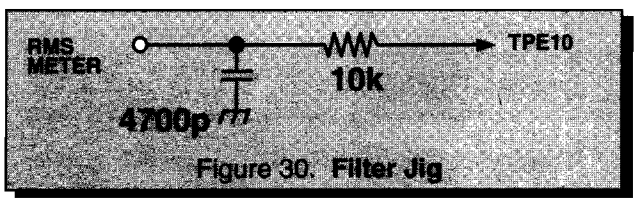

Figure 30. Filter Jig

2. Connect an RF signal generator to the RF antenna input.

Procedure:

1. Apply the following signal from the RF signal generator:
   Video: 100 IRE flat field, 30% modulation.
   Audio: 300Hz, 100% modulation, monaural (70 ± 5dB, 75Ω OPEN, P/S 10dB)
2. Adjust M0 data in the Serviceman Adjustment Menu) until the voltage measured is 190mV ± 10.0mV rms.

Serviceman Mode (Electronic Controls, Cont.)

Stereo Separation Adjustment (M3 & M4)

Preparation:

1. Connect an RF signal generator to the RF antenna input.
2. Connect an oscilloscope probe to TPE10 and GND wire to TPA13 (GND).

Procedure:

1. Apply the following signal from the RF signal generator:
   Video: 100 IRE flat field, 30% modulation.
   Audio: 300Hz, 30% modulation, stereo (left only) (70dB ± 5dB, 75Ω OPEN).
   Note: *Set Audio mode to* ***Stereo.***
2. Adjust M3 (MTS Low-Level Separation) data (in the Serviceman Adjustment Menu) until the amplitude of the measured waveform on the scope is minimum.
3. Apply the following signal from the RF signal generator:
   Video: 100 IRE flat field, 30% modulation.
   Audio: 3KHz, 30% modulation, stereo (left only).
   (70dB ± 5dB, 75Ω OPEN, P/S 10dB).
4. Adjust M4 (MTS High-Level Separation) data (in the Serviceman Adjustment Menu) until the amplitude of the waveform measured on the scope is minimum.
5. Repeat above steps 2 through 4 until the amplitude is at minimum for both signals.

Serviceman Mode (Mechanical Controls)

2nd Tuner - VCO Adjustment, Mechanical (S-Board)

Note: *Allow 20 seconds of aging prior to making the flowing adjustments.*

Preparation:

1. Apply color bars to the video input.
2. Connect an oscilloscope to TP12 (on S-Board). Use cold ground for scope connection. Set the scope at Horizontal Sweep rate (20µs) time base.
3. Connect a DVM to TP10 (on S-Board).
4. Connect a jumper between TPA7 and TPA13 (GND) on the A-Board.

Procedure:

1. Adjust L2109 (on S-Board) to measure 2.4V± 0.1V on the DVM. Confirm that the scope reading is within 1.0 ± 0.25V_{P-P} from sync tip to white level. See Figure 31

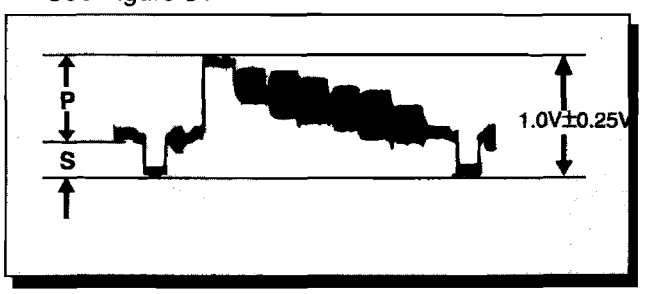

Figure 31. TP12 Waveform

2. Check that the sync signal amplitude (ratio between the sync signal to detection output) is within the range of 30 ±5% (S/(S+P) = 30 ±5%).

2nd Tuner - RF-AGC Adjustment, Mechanical (S-Board)

Preparation:

1. Connect a DVM to 2nd tuner AGC terminal.
2. Apply color bar with 63±2dB (75Ω open).

Procedure:

1. Rotate R2118 (on S-Board) fully clockwise and confirm that noise disappears. Record the reference voltage.
2. Rotate R2118 fully counter-clockwise and confirm that noise appears.
3. Slowly turn R2118 clockwise until the reference voltage is obtained.
4. Confirm RF-AGC voltage (the reference voltage) is lower when the incoming field signal strength is increased by 3dB.

REPLACEMENT PARTS LIST

Models: PT-51G44A/CA, PT-51G54A/CA & PT-61G54A/CA

Important Safety Notice: Components printed in **BOLD TYPE** have special characteristics important for safety. When replacing any of these components use only manufacturer's specified parts.

REF NO.	PART NO.	DESCRIPTION
		CAPRISTORS
CR2801	**EXNG131P365**	**RES-CAP 130PF/3.6 MEG**
CR2802	**EXNG131P365**	**RES-CAP 130PF/3.6 MEG**
		CAPACITORS
C004	**ECA1HM010**	**CAP,E 1.0UF/50V**
C006	ECUX1H331KBX	CAP,C 330PF-K-50V
C008	**TCUX1H103ZFN**	**CAP,C .01UF-Z-50V**
C009	ECA1CM101	CAP,E 100UF/16V
C010	**TCUX1H103ZFN**	**CAP,C .01UF-Z-50V**
C013	ECA1CM101	CAP,E 100UF/16V
C014	**ECUX1H221KBX**	**CAP,C 220PF-K-50V**
C017	ECUX1H330JCX	CAP,C 33PF-J-50V
C018	**ECUX1H330JCX**	**CAP,C 33PF-J-50V**
C019	ECA1CM101	CAP,E 100UF/16V
C020	**ECA0JM331**	**CAP,E 330UF/6.3V**
C021	ECUX1H392KBX	CAP,C .0039UF-K-50V
C022	**ECA1CM471**	**CAP,E 470UF/16V**
C023	TCUX1H103ZFN	CAP,C .01UF-Z-50V
C026	**ECA1CM102**	**CAP,E 1000UF/16V**
C027	ECA1CM221	CAP,E 220UF/16V
C028	**ECA1HM010**	**CAP,E 1.0UF/50V**
C033	ECA1VM470	CAP,E 47UF/35V
C034	**ECA1VM470**	**CAP,E 47UF/35V**
C035	ECA1CM101	CAP,E 100UF/16V
C036	**ECUX1H101JCX**	**CAP,C 100PF-J-50V**
C045	TCUX1H103ZFN	CAP,C .01UF-Z-50V
C046	**ECUX1H101JCX**	**CAP,C 100PF-J-50V**
C047	ECUX1H101JCX	CAP,C 100PF-J-50V
C048	**ECUX1H101JCX**	**CAP,C 100PF-J-50V**
C049	ECUX1H101JCX	CAP,C 100PF-J-50V
C051	**EEUFC1E470B**	**CAP,E 47UF/16V**
C052	TACCX103T50V	CAP,C .01UF/50V
C101	**ECJ2VF1H223Z**	**CAP,C .022UF-Z050V**
C102	ECA1HM100	CAP,E 10UF/50V
C103	**ECUX1H300JCX**	**CAP,C 30PF-J-50V**
C105	ECUX1H221JCX	CAP,C 220PF-J-50V
C106	**ECA1HMR47**	**CAP,E .47UF/50V**
C107	ECUX1H470JCX	CAP,C 47PF-J-50V
C108	**ECA1HMR22**	**CAP,E .22UF/50V**
C109	ECEA1HN100U	CAP,E 10UF/50V
C113	**ECA1HM100**	**CAP,E 10UF/50V**
C114	ECA1CM101	CAP,E 100UF/16V
C117	**ECUX1H040CCX**	**CAP,C 4PF-C-50V**
C126	ECA1CM331	CAP,E 330UF/16V
C151	**ECA1HMR22**	**CAP,E .22UF/50V**
C201	TCUX1H103ZFN	CAP,C .01UF-Z-50V
C202	**ECUX1H101JCX**	**CAP,C 100PF-J-50V**
C203	ECA1HM100	CAP,E 10UF/50V
C301	**ECUX1H390JCX**	**CAP,C 39PF-J-50V**
C302	ECEA1HN010U	CAP,E 1UF/50V
C304	**ECEA1HN010U**	**CAP,E 1UF/50V**

REF NO.	PART NO.	DESCRIPTION
C305	ECA1HMR47	CAP,E .47UF/50V
C306	**ECA0JM331**	**CAP,E 330UF/6.3V**
C308	ECQB1H823JM	CAP,P .082UF-J-50V
C309	**ECA1CM101**	**CAP,E 100UF/16V**
C310	ECA1HM4R7	CAP,E 4.7UF/50V
C311	**ECA1HM010**	**CAP,E 1.0UF/50V**
C312	ECA1HM100	CAP,E 10UF/50V
C313	**ECQB1H473JM**	**CAP,P .047UF-J-50V**
C351	ECA2EM100	CAP,E 10UF/250V
C353	**ECKD2H103PU**	**CAP,C .01UF-P-500V**
C354	ECA1HM100	CAP,E 10UF/50V
C356	**ECKD3D332KB**	**CAP,C .0033UF-K-2KV**
C357	ECEA1HN3R3U	CAP,E 3.3UF-50V
C359	**ECKD3D102KB**	**CAP,C .001UF-K-2KV**
C360	ECA1VM470	CAP,E 47UF/35V
C361	**TACCW101T50V**	**CAP,C 100PF/50V**
C363	ECKD3D102KB	CAP,C .001UF-K-2KV
C364	**ECA1VM470**	**CAP,E 47UF/35V**
C365	TACCW101T50V	CAP,C 100PF/50V
C366	**ECA2EM100**	**CAP,E 10UF/250V**
C371	ECA2EM100	CAP,E 10UF/250V
C373	**ECKD2H103PU**	**CAP,C .01UF-P-500V**
C374	ECA1HM100	CAP,E 10UF/50V
C376	**ECKD3D332KB**	**CAP,C .0033UF-K-2KV**
C377	ECEA1HN3R3U	CAP,E 3.3UF-50V
C379	**ECKD3D102KB**	**CAP,C .001UF-K-2KV**
C380	ECA1VM470	CAP,E 47UF/35V
C381	**TACCW101T50V**	**CAP,C 100PF/50V**
C391	ECA2EM100	CAP,E 10UF/250V
C393	**ECKD2H103PU**	**CAP,C .01UF-P-500V**
C394	ECA1HM100	CAP,E 10UF/50V
C396	**ECKD3D332KB**	**CAP,C .0033UF-K-2KV**
C397	ECEA1HN3R3U	CAP,E 3.3UF-50V
C401	**ECQB1H682JM**	**CAP,P .0068UF-J-50V**
C402	ECUX1H471KBX	CAP,C 470PF-K-50V
C403	**ECA1HMR47**	**CAP,E .47UF/50V**
C451	ECA1CM221	CAP,E 220UF/16V
C452	**ECSF1EE105**	**CAP,T 1.0UF/25V**
C453	ECEA1HFSR33	CAP,E .33UF/50V
C454	**ECA1EHG222E**	**CAP,E 2200UF/25V**
C455	ECA1VM101	CAP,E 100UF/35V
C456	**ECQM1104KZ**	**CAP,P .1UF-K-100V**
C457	ECEA1HFSR47	CAP,E .47UF/50V
C458	**ECEA1HFSR47**	**CAP,E .47UF/50V**
C459	ECA1VM471	CAP,E 470UF/35V
C460	**ECQM1103KZ**	**CAP,P .01UF-K-100V**
C461	ECCD2H180JC	CAP,C 18UF/500V
C463	**ECQB1H103JM**	**CAP,P .01UF-J-50V**
C464	TACCX103T50V	CAP,C .01UF/50V
C465	**ECQB1H334KF**	**CAP,P .33UF-K-50V**
C466	TACCX103T50V	CAP,C .01UF/50V

REPLACEMENT PARTS LIST

Models: PT-51G44A/CA, PT-51G54A/CA & PT-61G54A/CA

Important Safety Notice: Components printed in **BOLD TYPE** have special characteristics important for safety. When replacing any of these components use only manufacturer's specified parts.

REF NO.	PART NO.	DESCRIPTION
C467	**ECA1CM470**	**CAP,E 47UF/16V**
C487	ECA1VM470	CAP,E 47UF/35V
C502	**ECQB1H223JM**	**CAP,P .022UF-J-50V**
C503	ECA1HM2R2	CAP,E 2.2UF/50V
C505	**ECUX1H221JUX**	**CAP,C 220PF-J-50V**
C506	ECA1CM101	CAP,E 100UF/16V
C521	**ECKD2H332KB**	**CAP,C .0033UF-K-500V**
C522	ECKD2H332KB	CAP,C .0033UF-K-500V
C551	**ECKD3D221JB**	**CAP,C 220PF-J-2KV**
C552	**ECKD3D152JB**	**CAP,C .0015UF-J-2KV**
C553	**ECKD3D152JB**	**CAP,C .0015UF-J-2KV**
C554	**ECQB1H563JM**	**CAP,P .056UF-J-50V**
C555	**ECWH12H392JS**	**CAP,P .0039UF-J-1.2KV**
C556	**ECKD3D181JB**	**CAP,C 180PF-J-2KV**
C557	**ECWH12H103JS**	**CAP,P .01UF-J-1.2KV**
C558	**ECQF4273JZH**	**CAP,P .027UF-J-400V**
C559	**ECKD3D391JB**	**CAP,C 390PF-J-2KV**
C560	**TAC7A2D474JC**	**CAP,P .47UF/200V**
C561	**ECEA1HN2R2U**	**CAP,E 2.2UF/50V**
C564	ECEA1CN220U	CAP,E 22UF-16V
C565	**ECEA1HNR47U**	**CAP,E .47UF-50V**
C581	**ECEA160V33Z**	**CAP,E 33UF/160V**
C582	**ECKD2H102KB**	**CAP,C .001UF-K-500V**
C583	**ECA2EM470**	**CAP,E 47UF-250V**
C584	**ECKD2H471KB**	**CAP,C 470PF-K-500V**
C585	**ECA1VM102**	**CAP,E 1000UF/35V**
C586	**ECQE12473KF**	**CAP,P .047UF-K-1.25KV**
C601	ECUX1H680JCX	CAP,C 68PF-J-50V
C604	**ECUX1H120JUX**	**CAP,C 12PF-J-50V**
C605	ECUX1H332KBX	CAP,C .0033UF-K-50V
C606	**ECA1HM010**	**CAP,E 1.0UF/50V**
C607	ECUX1H560JCX	CAP,C 56PF-J-50V
C608	**TCUX1H103KBN**	**CAP,C .01UF-K-50V**
C751	ECQE1335KF	CAP,P 3.3UF-K-100V
C752	**ECA1CM101**	**CAP,E 100UF/16V**
C755	ECA1VM470	CAP,E 47UF/35V
C804	**ECKD2H103ZF**	**CAP,C .01UF-Z-500V**
C805	**ECKD2H103ZF**	**CAP,C .01UF-Z-500V**
C806	**ECKD2H103ZF**	**CAP,C .01UF-Z-500V**
C809	ECQB1H223JM	CAP,P .022UF-J-50V
C815	**ECQB1H152JM**	**CAP,P .0015UF-J-50V**
C816	**EC0S2DA471BB**	**CAP,E 470UF/160V**
C817	**EC0S2DA471BB**	**CAP,E 470UF/160V**
C818	ECKD3A392KB	CAP,C 3900PF-K-1KV
C819	**ECQB1H102JM**	**CAP,P .001UF-J-50V**
C820	ECA1VM470	CAP,E 47UF/35V
C821	**ECQB1H102JM**	**CAP,P .001UF-J-50V**
C822	TACCW391T50V	CAP,C 390PF/50V
C823	**ECQB1H471JF**	**CAP,P .0047UF-J-50V**
C824	ECA1VHG101B	CAP,E 100UF-35V
C825	**ECQB1H473JM**	**CAP,P .047UF-J-50V**

REF NO.	PART NO.	DESCRIPTION
C826	ECQB1H683JM	CAP,P .068UF-J-50V
C827	**ECQB1H104JM**	**CAP,P .1UF-J-50V**
C828	ECQB1H473JM	CAP,P .047UF-J-50V
C829	**ECKCNB472ME**	**CAP,C 4700PF-M-250V**
C830	**ECKCNB472ME**	**CAP,C 4700PF-M-250V**
C831	**ECKD3D681KB**	**CAP,C 680PF-K-2KV**
C832	**ECES2DU221EG**	**CAP,E 220UF-200V**
C833	**ECKD3A471KB**	**CAP,C 470PF-K-1KV**
C834	ECA1EM102	CAP,E 1000UF/25V
C835	**ECKD3A471KB**	**CAP,C 470PF-K-1KV**
C836	ECA1CM102	CAP,E 1000UF/16V
C837	**ECKD3A471KB**	**CAP,C 470PF-K-1KV**
C838	**ECA1VM222**	**CAP,E 2200UF/35V**
C839	**ECKD3A471KB**	**CAP,C 470PF-K-1KV**
C840	**ECA1VM222**	**CAP,E 2200UF/35V**
C841	**ECKD3A471KB**	**CAP,C 470PF-K-1KV**
C842	**ECA1HM102**	**CAP,E 1000UF/50V**
C844	**ECKD3D681KB**	**CAP,C 680PF-K-2KV**
C845	ECQB1H104JM	CAP,P .1UF-J-50V
C846	**ECA1CM101**	**CAP,E 100UF/16V**
C847	ECA0JM331	CAP,E 330UF/6.3V
C848	**ECA1CM101**	**CAP,E 100UF/16V**
C849	ECA1HM100	CAP,E 10UF/50V
C850	**ECA1EM220**	**CAP,E 22UF/25V**
C851	ECA1CM470	CAP,E 47UF/16V
C852	**ECA1CM470**	**CAP,E 47UF/16V**
C870	**ECKCNB472ME**	**CAP,C 4700PF-M-250V**
C880	**ECA1CM101**	**CAP,E 100UF/16V**
C881	ECA1CM101	CAP,E 100UF/16V
C882	**ECA1CM101**	**CAP,E 100UF/16V**
C883	ECA1CM101	CAP,E 100UF/16V
C884	**ECA1VM470**	**CAP,E 47UF/35V**
C885	ECEA1CN101U	CAP,E 100UF-16V
C886	**ECA1CM221**	**CAP,E 220UF/16V**
C888	ECA1VM470	CAP,E 47UF/35V
C889	**TCUX1H103KBN**	**CAP,C .01UF-K-50V**
C890	TCUX1H103KBN	CAP,C .01UF-K-50V
C1551	**ECEA1EN101U**	**CAP,E 100UF-25V**
C1552	ECA1CM101	CAP,E 100UF/16V
C1553	**ECQB1H683JM**	**CAP,P .068UF-J-50V**
C1571	ECKD2H181KB	CAP,C 180PF-K-500V
C1572	**ECEA1HN100U**	**CAP,E 10UF/50V**
C1582	**ECA1HM470**	**CAP,E 47UF/50V**
C1583	**ECA1HM220**	**CAP,E 22UF/50V**
C1584	ECA1VM470	CAP,E 47UF/35V
C1585	**ECA1CM221**	**CAP,E 220UF/16V**
C1586	TACCX103T50V	CAP,C .01UF/50V
C1587	**ECA1HM4R7**	**CAP,E 4.7UF/50V**
C1588	TCUX1H103ZFN	CAP,C .01UF-Z-50V
C1801	**TCUX1H103ZFN**	**CAP,C .01UF-Z-50V**
C1802	ECQV1H154JM	CAP,P .15UF-J-50V

REPLACEMENT PARTS LIST

Models: PT-51G44A/CA, PT-51G54A/CA & PT-61G54A/CA

Important Safety Notice: Components printed in **BOLD TYPE** have special characteristics important for safety. When replacing any of these components use only manufacturer's specified parts.

C1803	**ECEA1HKAR22**	**CAP,E .22UF/50V**
C1804	ECEA1HKAR22	CAP,E .22UF/50V
C1805	**ECJ2VF1H333Z**	**CAP,C .033UF-Z-50V**
C1806	TCUX1H103ZFN	CAP,C .01UF-Z-50V
C1807	**ECEA1CKA470**	**CAP,E 47UF/16V**
C1808	TCUX1H103ZFN	CAP,C .01UF-Z-50V
C1809	**ECEA1CKA470**	**CAP,E 47UF/16V**
C1810	ECJ2VF1H104Z	CAP,C .1UF-Z-50V
C1811	**TCUX1H103ZFN**	**CAP,C .01UF-Z-50V**
C1812	TCUX1H103ZFN	CAP,C .01UF-Z-50V
C1813	**TCUX1H103ZFN**	**CAP,C .01UF-Z-50V**
C1814	ECEA1CKA470	CAP,E 47UF/16V
C1815	**ECJ2VF1H104Z**	**CAP,C .1UF-Z-50V**
C1816	TCUX1H103ZFN	CAP,C .01UF-Z-50V
C1817	**TCUX1H103ZFN**	**CAP,C .01UF-Z-50V**
C1818	ECEA1CKA100	CAP,E 10UF/16V
C1819	**TCUX1H103ZFN**	**CAP,C .01UF-Z-50V**
C1820	ECEA1CKA470	CAP,E 47UF/16V
C1821	**ECUX1H150JCX**	**CAP,C 15PF-J-50V**
C1822	ECUX1H120JCX	CAP,C 12PF-J-50V
C1825	**ECUX1H680JCX**	**CAP,C 68PF-J-50V**
C1826	TCUX1H103ZFN	CAP,C .01UF-Z-50V
C1827	**TCUX1H103ZFN**	**CAP,C .01UF-Z-50V**
C1828	TCUX1H103ZFN	CAP,C .01UF-Z-50V
C1829	**ECJ2VF1H104Z**	**CAP,C .1UF-Z-50V**
C1830	ECUX1H151JCX	CAP,C 150PF-J-50V
C1831	**ECJ2VF1H104Z**	**CAP,C .1UF-Z-50V**
C1832	ECJ2VF1H104Z	CAP,C .1UF-Z-50V
C1833	**ECJ2VF1H104Z**	**CAP,C .1UF-Z-50V**
C1835	ECEA1CKA100	CAP,E 10UF/16V
C1836	**ECUX1H560JCX**	**CAP,C 56PF-J-50V**
C1839	ECUX1H101JCX	CAP,C 100PF-J-50V
C1840	**ECUX1H101JCX**	**CAP,C 100PF-J-50V**
C1901	ECA1HM100	CAP,E 10UF/50V
C1902	**ECQB1H223JM**	**CAP,P .022UF-J-50V**
C1903	ECA1CM101	CAP,E 100UF/16V
C1904	**ECA1CM101**	**CAP,E 100UF/16V**
C1905	ECEA1HN010U	CAP,E 1UF/50V
C1906	**ECUX1H821JCX**	**CAP,C 820PF-J-50V**
C1907	ECJ2VF1H104Z	CAP,C .1UF-Z-50V
C1908	**ECA1HM010**	**CAP,E 1.0UF/50V**
C1909	ECUX1H102JCX	CAP,C .001UF-J-50V
C1910	**ECJ2VF1H104Z**	**CAP,C .1UF-Z-50V**
C1911	ECEA1HN010U	CAP,E 1UF/50V
C1915	**ECQB1H184JF**	**CAP,P .18UF-J-50V**
C1917	ECA1HM3R3	CAP,E 3.3UF/50V
C1922	**ECEA1HN010U**	**CAP,E 1UF/50V**
C2104	ECA1CM102	CAP,E 1000UF/16V
C2105	**ECA0JM101**	**CAP,E 100UF/6.3V**
C2106	ECA1HMR47	CAP,E .47UF/50V
C2108	**ECA1CM330**	**CAP,E 33UF/16V**

C2109	TCUX1H103ZFN	CAP,C .01UF-Z-50V
C2111	**ECEA1HFSR22**	**CAP,E .22UF/50V**
C2114	TCUX1H103ZFN	CAP,C .01UF-Z-50V
C2115	**ECA1HM100**	**CAP,E 10UF/50V**
C2116	TCUX1H103ZFN	CAP,C .01UF-Z-50V
C2117	**ECUX1H820JCX**	**CAP,C 82PF-J-50V**
C2118	ECUX1H270JCX	CAP,C 27PF-J-50V
C2119	**TCUX1H103ZFN**	**CAP,C .01UF-Z-50V**
C2120	ECEA1HFSR47	CAP,E .47UF/50V
C2121	**TCUX1H103ZFN**	**CAP,C .01UF-Z-50V**
C2123	ECUX1H270JCX	CAP,C 27PF-J-50V
C2124	**TCUX1H103ZFN**	**CAP,C .01UF-Z-50V**
C2125	ECA1CM100	CAP,E 10UF/16V
C2126	**ECA1HMR22**	**CAP,E .22UF/50V**
C2201	ECSF16E3R3	CAP,T 3.3UF/16V
C2202	**ECA1HM4R7**	**CAP,E 4.7UF/50V**
C2203	ECA1HM010	CAP,E 1.0UF/50V
C2204	**ECA1HM4R7**	**CAP,E 4.7UF/50V**
C2205	ECA1HM4R7	CAP,E 4.7UF/50V
C2206	**ECA1HM4R7**	**CAP,E 4.7UF/50V**
C2207	ECA1HM4R7	CAP,E 4.7UF/50V
C2208	**ECA1HM4R7**	**CAP,E 4.7UF/50V**
C2209	ECA1CM101	CAP,E 100UF/16V
C2210	**ECA1HMR33**	**CAP,E .33UF/50V**
C2211	ECEA1HFSR68	CAP,E .68UF-50V
C2212	**ECA1HM2R2**	**CAP,E 2.2UF/50V**
C2213	ECA1HM100	CAP,E 10UF/50V
C2214	**ECQB1H104JM**	**CAP,P .1UF-J-50V**
C2215	ECQB1H223JM	CAP,P .022UF-J-50V
C2216	**ECUX1H332KBX**	**CAP,C .0033UF-K-50V**
C2219	ECSF16E10VB	CAP,T 10PF-16V
C2222	**TCUX1H103KBN**	**CAP,C .01UF-K-50V**
C2231	TCUX1H103KBN	CAP,C .01UF-K-50V
C2232	**ECUX1H472KBX**	**CAP,C .0047UF-K-50V**
C2301	ECA1HM102	CAP,E 1000UF/50V
C2302	**ECA1HM010**	**CAP,E 1.0UF/50V**
C2303	ECUX1H821KBX	CAP,C 820PF-K-50V
C2304	**ECUX1H821KBX**	**CAP,C 820PF-K-50V**
C2305	ECA1HM010	CAP,E 1.0UF/50V
C2306	**ECA1HM102**	**CAP,E 1000UF/50V**
C2307	ECA1HM102	CAP,E 1000UF/50V
C2309	**ECQB1H104JM**	**CAP,P .1UF-J-50V**
C2310	ECEA1CN100U	CAP,E 10UF-16V
C2312	**ECA1VM101**	**CAP,E 100UF/35V**
C2313	ECA1VM101	CAP,E 100UF/35V
C2314	**ECQB1H104JM**	**CAP,P .1UF-J-50V**
C2315	TCUX1H103KBN	CAP,C .01UF-K-50V
C2316	**ECA1HM220**	**CAP,E 22UF/50V**
C2331	ECEA1CKA100	CAP,E 10UF/16V
C2332	**ECEA1CKA100**	**CAP,E 10UF/16V**
C2333	ECEA1HKA010	CAP,E 1.0UF/50V

REPLACEMENT PARTS LIST

Models: PT-51G44A/CA, PT-51G54A/CA & PT-61G54A/CA

Important Safety Notice: Components printed in **BOLD TYPE** have special characteristics important for safety. When replacing any of these components use only manufacturer's specified parts.

REF NO.	PART NO.	DESCRIPTION
C2334	ECEA1HKA010	CAP,E 1.0UF/50V
C2335	ECEA1HKN010	CAP,E 1.0UF/50V
C2336	ECEA1HKN010	CAP,E 1.0UF/50V
C2344	ECEA1AKA221	CAP,E 220UF/10V
C2404	ECA1HM4R7	CAP,E 4.7UF/50V
C2405	ECA1HM4R7	CAP,E 4.7UF/50V
C2406	ECA1HM4R7	CAP,E 4.7UF/50V
C2407	ECA1HM2R2	CAP,E 2.2UF/50V
C2408	ECA1HM100	CAP,E 10UF/50V
C2409	TCUX1H103KBN	CAP,C .01UF-K-50V
C2417	ECA1HM100	CAP,E 10UF/50V
C2419	ECA1HM0R1	CAP,E 0.1UF/50V
C2420	ECQB1H104JM	CAP,P .1UF-J-50V
C2421	ECA1HM470	CAP,E 47UF/50V
C2422	ECUX1H472KBX	CAP,C .0047UF-K-50V
C2423	ECA1HM0R1	CAP,E 0.1UF/50V
C2425	ECA1HM4R7	CAP,E 4.7UF/50V
C2432	ECEA1CN100U	CAP,E 10UF-16V
C2433	ECEA1CN100U	CAP,E 10UF-16V
C2802	**ECQU2A224MV**	**CAP,P .22UF-M-250VAC**
C2805	**ECKDNA471MB**	**CAP,C 470PF-M-125VAC**
C2806	**ECKDNA471MB**	**CAP,C 470PF-M-125VAC**
C2807	ECA1EHG102E	CAP,E 1000UF-25V
C2808	ECKF1H103ZF	CAP,C .01UF-Z-50V
C3001	ECEA1CKA100	CAP,E 10UF/16V
C3002	ECEA1CKA100	CAP,E 10UF/16V
C3003	ECEA1HKA010	CAP,E 1.0UF/50V
C3004	ECEA1HKA010	CAP,E 1.0UF/50V
C3005	ECEA1CKA100	CAP,E 10UF/16V
C3008	ECEA1HKA010	CAP,E 1.0UF/50V
C3009	ECEA1CKA100	CAP,E 10UF/16V
C3012	ECEA1CKA101	CAP,E 100UF/16V
C3013	ECEA1HKA010	CAP,E 1.0UF/50V
C3014	ECEA1CKA220	CAP,E 22UF/16V
C3016	ECEA1CKA470	CAP,E 47UF/16V
C3020	TACCW103T50V	CAP,C .01UF/50V
C3021	TACCW103T50V	CAP,C .01UF/50V
C3023	TACCW103T50V	CAP,C .01UF/50V
C3026	TACCW103T50V	CAP,C .01UF/50V
C3030	ECEA1CKN100	CAP,E 10UF/16V
C3050	ECA1HM0R1	CAP,E 0.1UF/50V
C3051	ECUX1H472KBX	CAP,C .0047UF-K-50V
C3105	TACCX103T50V	CAP,C .01UF/50V
C3200	ECA1CM101	CAP,E 100UF/16V
C3201	TCUX1H103ZFN	CAP,C .01UF-Z-50V
C3206	TCUX1H103KBN	CAP,C .01UF-K-50V
C3207	ECUX1H820JCX	CAP,C 82PF-J-50V
C3208	ECUX1H102KBX	CAP,C .001UF-K-50V
C3209	ECUX1H820JCX	CAP,C 82PF-J-50V
C3210	ECUX1H220JCX	CAP,C 22PF-J-50V
C3230	ECEA1EN470U	CAP,E 47UF/25V

REF NO.	PART NO.	DESCRIPTION
C3231	ECEA1EN470U	CAP,E 47UF/25V
C3301	ECA1VM470	CAP,E 47UF/35V
C3580	TCUX1H103KBN	CAP,C .01UF-K-50V
C3581	ECEA1CN470U	CAP,E 47UF-16V
C4107	ECUX1H331JCX	CAP,C 330PF-J-50V
C4108	TCUX1H103ZFN	CAP,C .01UF-Z-50V
C4109	ECUX1H271JCX	CAP,C 270PF-J-50V
C4110	ECA1HM100	CAP,E 10UF/50V
C4112	ECA1CM101	CAP,E 100UF/16V
C4131	ECUX1H471JCX	CAP,C 470PF-J-50V
C4141	ECUX1H471JCX	CAP,C 470PF-J-50V
C4142	TCUX1H103ZFN	CAP,C .01UF-Z-50V
C4151	ECUX1H561JCX	CAP,C 560PF-J-50V
C4251	ECJ2VF1H104Z	CAP,C .1UF-Z-50V
C4303	ECUX1H151JCX	CAP,C 150PF-J-50V
C4304	ECEA1CKA100	CAP,E 10UF/16V
C4313	ECUX1H391KBX	CAP,C 390PF-K-50V
C4314	ECEA1HKA010	CAP,E 1.0UF/50V
C4315	ECUX1H152JCX	CAP,C .0015UF-J-50V
C4316	ECEA0JKA331	CAP,E 330UF/6.3V
C4317	TCUX1H103ZFN	CAP,C .01UF-Z-50V
C4319	ECUX1H391JCX	CAP,C 390PF-J-50V
C4320	ECUX1H271JCX	CAP,C 270PF-J-50V
C6501	TCUX1H103ZFN	CAP,C .01UF-Z-50V
C6504	ECEA1CKA470	CAP,E 47UF/16V
C6505	TCUX1H103ZFN	CAP,C .01UF-Z-50V
C6506	ECEA1CKA470	CAP,E 47UF/16V
C6507	TCUX1H103ZFN	CAP,C .01UF-Z-50V
C6508	ECEA1CKA470	CAP,E 47UF/16V
C6509	ECEA1CKA100	CAP,E 10UF/16V
C6510	TCUX1H103ZFN	CAP,C .01UF-Z-50V
C6511	TCUX1H103ZFN	CAP,C .01UF-Z-50V
C6512	ECEA1CKA100	CAP,E 10UF/16V
C6513	TCUX1H103ZFN	CAP,C .01UF-Z-50V
C6514	ECEA1CKA100	CAP,E 10UF/16V
C6515	ECEA1CKA101	CAP,E 100UF/16V
C6516	ECUX1H472KBX	CAP,C .0047UF-K-50V
C6517	TCUX1H103ZFN	CAP,C .01UF-Z-50V
C6518	ECEA1CKA470	CAP,E 47UF/16V
C6519	ECUX1H150JCX	CAP,C 15PF-J-50V
C6520	ECUX1H470JCX	CAP,C 47PF-J-50V
C6521	ECUX1H150JCX	CAP,C 15PF-J-50V
C6522	ECEA1CKA470	CAP,E 47UF/16V
C6523	TCUX1H103ZFN	CAP,C .01UF-Z-50V
C6524	TCUX1H103ZFN	CAP,C .01UF-Z-50V
C6526	TCUX1H103ZFN	CAP,C .01UF-Z-50V
C6527	ECEA1CKA470	CAP,E 47UF/16V
C6528	TCUX1H103ZFN	CAP,C .01UF-Z-50V
C6530	ECUX1H470JCX	CAP,C 47PF-J-50V
C6533	TCUX1H103ZFN	CAP,C .01UF-Z-50V
C6539	ECEA1CKA470	CAP,E 47UF/16V

REPLACEMENT PARTS LIST

Models: PT-51G44A/CA, PT-51G54A/CA & PT-61G54A/CA

Important Safety Notice: Components printed in **BOLD TYPE** have special characteristics important for safety. When replacing any of these components use only manufacturer's specified parts.

REF NO.	PART NO.	DESCRIPTION
C6542	**ECEA1CKA100**	**CAP,E 10UF/16V**
C6543	ECUX1H470JCX	CAP,C 47PF-J-50V
C6546	**ECUX1H150JCX**	**CAP,C 15PF-J-50V**
C6547	ECUX1H470JCX	CAP,C 47PF-J-50V
C6548	**ECUX1H150JCX**	**CAP,C 15PF-J-50V**
C6549	ECEA1CKA100	CAP,E 10UF/16V
C7001	**ECA1HM2R2**	**CAP,E 2.2UF/50V**
C7002	ECA1HM2R2	CAP,E 2.2UF/50V
C7003	**ECA1HM101**	**CAP,E 100UF/50V**
C7004	ECA1HM101	CAP,E 100UF/50V
C7005	**ECA1HM101**	**CAP,E 100UF/50V**
C7006	ECA1HM101	CAP,E 100UF/50V
C7011	**ECUX1H151JCX**	**CAP,C 150PF-J-50V**
C7012	ECUX1H151JCX	CAP,C 150PF-J-50V
C7013	**ECUX1H151JCX**	**CAP,C 150PF-J-50V**
C7014	ECUX1H151JCX	CAP,C 150PF-J-50V
C7015	**ECUX1H151JCX**	**CAP,C 150PF-J-50V**
C7016	ECUX1H151JCX	CAP,C 150PF-J-50V
C7023	**TCUX1H103KBN**	**CAP,C .01UF-K-50V**
C7024	TCUX1H103KBN	CAP,C .01UF-K-50V
C7025	**TCUX1H103KBN**	**CAP,C .01UF-K-50V**
C7026	TCUX1H103KBN	CAP,C .01UF-K-50V
C7101	**TCUY1C105KBM**	**CAP,C 1UF-K-16V**
C7102	TCUX1H103ZFN	CAP,C .01UF-Z-50V
C7103	**ECJ2VF1H473Z**	**CAP,C .047-Z-50V**
C7104	ECA1CM101	CAP,E 100UF/16V
C7105	**TCUX1H103ZFN**	**CAP,C .01UF-Z-50V**
C7106	TCUX1H103ZFN	CAP,C .01UF-Z-50V
C7107	**TCUX1H103ZFN**	**CAP,C .01UF-Z-50V**
C7108	TCUX1H103ZFN	CAP,C .01UF-Z-50V
C7109	**ECA1CM101**	**CAP,E 100UF/16V**
C7110	ECA1CM101	CAP,E 100UF/16V
C7112	**TCUX1H103ZFN**	**CAP,C .01UF-Z-50V**
C7113	TCUX1H103ZFN	CAP,C .01UF-Z-50V
C7114	**ECA1CM101**	**CAP,E 100UF/16V**
C7117	TCUX1H103ZFN	CAP,C .01UF-Z-50V
C7118	**TCUX1H103ZFN**	**CAP,C .01UF-Z-50V**
C7120	TCUX1H103ZFN	CAP,C .01UF-Z-50V
C7122	**ECUX1H101JCX**	**CAP,C 100PF-J-50V**
C7123	TCUX1H103ZFN	CAP,C .01UF-Z-50V
C7124	**ECUX1H101JCX**	**CAP,C 100PF-J-50V**
C7125	ECJ2VF1H104Z	CAP,C .1UF-Z-50V
C7126	**TCUX1H103ZFN**	**CAP,C .01UF-Z-50V**
C7127	ECJ2VF1H104Z	CAP,C .1UF-Z-50V
C7128	**ECA1CM101**	**CAP,E 100UF/16V**
C7130	TCUX1H103ZFN	CAP,C .01UF-Z-50V
C7131	**ECA1CM101**	**CAP,E 100UF/16V**
C7132	TCUX1H103ZFN	CAP,C .01UF-Z-50V
C7133	**TCUX1H103ZFN**	**CAP,C .01UF-Z-50V**
C7134	ECA1CM101	CAP,E 100UF/16V
C7136	**TCUX1H103ZFN**	**CAP,C .01UF-Z-50V**

REF NO.	PART NO.	DESCRIPTION
C7137	TCUX1H103ZFN	CAP,C .01UF-Z-50V
C7138	**ECUX1H331JCX**	**CAP,C 330PF-J-50V**
C7139	TCUX1H103ZFN	CAP,C .01UF-Z-50V
C7140	**ECA1CM101**	**CAP,E 100UF/16V**
C7141	ECA1CM101	CAP,E 100UF/16V
C7142	**ECUX1H220JCX**	**CAP,C 22PF-J-50V**
C7143	ECUX1H220JCX	CAP,C 22PF-J-50V
C7144	**TCUX1H103ZFN**	**CAP,C .01UF-Z-50V**
C7145	ECUX1H151JCX	CAP,C 150PF-J-50V
C7146	**ECA1CM101**	**CAP,E 100UF/16V**
C7147	TCUX1H103ZFN	CAP,C .01UF-Z-50V
C7148	**ECUX1H471JCX**	**CAP,C 470PF-J-50V**
C7149	TCUX1H103ZFN	CAP,C .01UF-Z-50V
C7150	**ECA1CM101**	**CAP,E 100UF/16V**
C7151	ECA1CM101	CAP,E 100UF/16V
C7152	**TCUX1H103ZFN**	**CAP,C .01UF-Z-50V**
C7153	ECA1CM101	CAP,E 100UF/16V
C7154	**TCUX1H103ZFN**	**CAP,C .01UF-Z-50V**
C7155	TCUX1H103ZFN	CAP,C .01UF-Z-50V
C7156	**TCUX1H103ZFN**	**CAP,C .01UF-Z-50V**
C7157	TCUX1H103ZFN	CAP,C .01UF-Z-50V
C7158	**TCUX1H103ZFN**	**CAP,C .01UF-Z-50V**
C7159	TCUX1H103ZFN	CAP,C .01UF-Z-50V
C7160	**ECA1CM101**	**CAP,E 100UF/16V**
C7161	ECA1CM101	CAP,E 100UF/16V
C7162	**ECA1CM101**	**CAP,E 100UF/16V**
C7163	ECA1CM101	CAP,E 100UF/16V
C7164	**ECA1CM101**	**CAP,E 100UF/16V**
C7165	ECA1CM101	CAP,E 100UF/16V
C7166	**ECA1CM101**	**CAP,E 100UF/16V**
C7168	ECA1CM101	CAP,E 100UF/16V
C7169	**ECUX1H181JCX**	**CAP,C 180PF-J-50V**
C7170	ECUX1H181JCX	CAP,C 180PF-J-50V
C7171	**ECUX1H181JCX**	**CAP,C 180PF-J-50V**
C7172	TCUX1H103ZFN	CAP,C .01UF-Z-50V
C7173	**ECUX1H331JCX**	**CAP,C 330PF-J-50V**
C7174	ECUX1H331JCX	CAP,C 330PF-J-50V
C7175	**ECUX1H331JCX**	**CAP,C 330PF-J-50V**
C7176	ECUX1H331JCX	CAP,C 330PF-J-50V
C7177	**ECUX1H331JCX**	**CAP,C 330PF-J-50V**
C7178	ECUX1H331JCX	CAP,C 330PF-J-50V
C7179	**ECUX1H181JCX**	**CAP,C 180PF-J-50V**
C7180	ECUX1H181JCX	CAP,C 180PF-J-50V
C7181	**ECUX1H181JCX**	**CAP,C 180PF-J-50V**
C7182	ECUX1H682KBX	CAP,C .0068UF-K-50V
C7183	**ECA1CM101**	**CAP,E 100UF/16V**
C7184	TCUX1H103ZFN	CAP,C .01UF-Z-50V
C7185	**ECUX1H682KBX**	**CAP,C .0068UF-K-50V**
C7186	ECUX1H682KBX	CAP,C .0068UF-K-50V
C7187	**ECUX1H682KBX**	**CAP,C .0068UF-K-50V**
C7188	ECUX1H682KBX	CAP,C .0068UF-K-50V

REPLACEMENT PARTS LIST

Models: PT-51G44A/CA, PT-51G54A/CA & PT-61G54A/CA

Important Safety Notice: Components printed in **BOLD TYPE** have special characteristics important for safety. When replacing any of these components use only manufacturer's specified parts.

REF NO.	PART NO.	DESCRIPTION
C7189	**ECUX1H682KBX**	**CAP,C .0068UF-K-50V**
C7190	ECA1CM101	CAP,E 100UF/16V
C7191	**TCUX1H103ZFN**	**CAP,C .01UF-Z-50V**
C7197	ECUX1H101JCX	CAP,C 100PF-J-50V
C7198	**ECJ2VF1H103Z**	**CAP,C .01UF-Z-50V**
		DIODES
D003	**MA4047M**	**DIODE, ZENER**
D005	MA151K	DIODE
D007	**MA151K**	**DIODE**
D008	MA151K	DIODE
D009	**MA4043M**	**DIODE, ZENER**
D010	MA4062M	DIODE, ZENER
D011	**MA4062M**	**DIODE, ZENER**
D024	MA4330M	DIODE
D025	**MA4051L**	**DIODE, ZENER**
D026	MA4051L	DIODE, ZENER
D027	**MA4051L**	**DIODE, ZENER**
D030	MA4051L	DIODE, ZENER
D039	**MA151K**	**DIODE**
D059	MA151K	DIODE
D201	**MA4110M**	**DIODE, ZENER**
D356	MA165	DIODE
D357	**MA185**	**DIODE**
D359	MA165	DIODE
D360	**MA165**	**DIODE**
D361	MA165	DIODE
D363	**MA4100M**	**DIODE, ZENER**
D364	MA167	DIODE
D365	**MA29T-ATA**	**DIODE**
D376	MA165	DIODE
D377	**MA185**	**DIODE**
D396	MA165	DIODE
D397	**MA185**	**DIODE**
D399	TVSRM1	DIODE
D451	**ERA15-01**	**DIODE**
D452	MA2330-B	DIODE
D453	**MA2330-B**	**DIODE**
D454	MA4360M	DIODE
D455	**MA4062L**	**DIODE**
D456	MA4062L	DIODE
D457	**MA4120M**	**DIODE**
D458	MA165	DIODE
D459	**MA165**	**DIODE**
D460	MA165	DIODE
D461	**MA165**	**DIODE**
D462	MA165	DIODE
D463	**MA165**	**DIODE**
D464	MA165	DIODE
D501	**MA4082L**	**DIODE**
D532	**MA4062L**	**DIODE**
D551	**RH3FLFS1**	**DIODE**

REF NO.	PART NO.	DESCRIPTION
D552	**S2L60P1518**	**DIODE**
D553	**MA4270M**	**DIODE**
D561	MA165	DIODE
D562	**MA4039M**	**DIODE, ZENER**
D564	MA165	DIODE
D581	**ERA22-04**	**DIODE, ZENER**
D582	**AU02**	**DIODE**
D583	**RP1H**	**DIODE**
D756	MA165	DIODE
D802	**RBV-408**	**BRIDGE, RECTIFIER**
D804	MA165	DIODE
D816	**MA700**	**DIODE**
D817	AU01Z	DIODE
D818	**MA4220L**	**DIODE, ZENER**
D819	**TMPG10G3**	**DIODE**
D821	**MA165**	**DIODE**
D822	ERA22-02	DIODE
D831	**RU30ALFS1**	**DIODE, RECTIFIER**
D832	**RU3YX-M**	**DIODE**
D833	**RU3YX-MLF-C4**	**DIODE**
D834	**RL3ZLFS1**	**DIODE**
D835	**RL3ZLFS1**	**DIODE**
D836	**RL4ZLF-L1**	**DIODE**
D837	**MA165**	**DIODE**
D838	MA4047L	DIODE, ZENER
D839	**MA4033M**	**DIODE, ZENER**
D840	MA167	DIODE
D841	**MA165**	**DIODE**
D843	MA165	DIODE
D844	**MA4020**	**DIODE**
D845	MA151K	DIODE
D846	**MA151K**	**DIODE**
D847	MA165	DIODE
D848	**MA165**	**DIODE**
D849	MA165	DIODE
D1110	**MA151K**	**DIODE**
D1551	MA165	DIODE
D1552	**MA29-B**	**DIODE**
D1571	MA165	DIODE
D1581	**AS01**	**DIODE**
D1583	**MA4062L**	**DIODE**
D1584	**MA4330M**	**DIODE**
D1585	**MA4330M**	**DIODE**
D1901	MA4110M	DIODE, ZENER
D2101	MA3330M	DIODE
D2301	**MA4390M**	**DIODE**
D2354	MA4180M	DIODE, ZENER
D2801	**ERZC10VK361G**	**VARISTOR**
D2803	ERA15-01	DIODE
D3001	MA151K	DIODE
D3004	MA165	DIODE

REPLACEMENT PARTS LIST

Models: PT-51G44A/CA, PT-51G54A/CA & PT-61G54A/CA

Important Safety Notice: Components printed in **BOLD TYPE** have special characteristics important for safety. When replacing any of these components use only manufacturer's specified parts.

REF NO.	PART NO.	DESCRIPTION
D3012	**MA4110**	**DIODE, ZENER**
D3013	MA4110	DIODE, ZENER
D3014	**MA4110**	**DIODE, ZENER**
D3015	MA4110	DIODE, ZENER
D3016	**MA4110**	**DIODE, ZENER**
D3017	MA4110	DIODE, ZENER
D3018	**MA4110**	**DIODE, ZENER**
D3020	MA4110	DIODE, ZENER
D3022	**MA4110**	**DIODE, ZENER**
D3023	MA4110	DIODE, ZENER
D3024	**MA4110**	**DIODE, ZENER**
D3025	MA4110	DIODE, ZENER
D3100	**MA151K**	**DIODE**
D3101	MA151K	DIODE
D3200	**MA151K**	**DIODE**
D3201	MA151K	DIODE
D3580	**MA151K**	**DIODE**
D4104	MA151W	DIODE
D4105	**MA151K**	**DIODE**
D4106	MA4056M	DIODE
D4107	**MA151K**	**DIODE**
D4109	MA151K	DIODE
D4110	**MA151K**	**DIODE**
D4111	MA151K	DIODE
D4112	**MA151K**	**DIODE**
D4134	MA151K	DIODE
D4144	**MA151K**	**DIODE**
D4154	MA151K	DIODE
D4301	**MA3036H**	**DIODE**
		FUSES
F2801	**0BA1C63NU100**	**FUSE (6.3A-125V)**
		INTEGRATED CIRCUITS
IC001	**MN1874085TP1**	**INT CKT**
IC002	24LC04BIP	INT CKT
IC101	**AN5165K**	**INT CKT**
IC451	**LA7838**	**INT CKT**
IC452	**BA15218N**	**INT CKT**
IC801	**AN8026**	**INT CKT**
IC802	**SE139NLF4**	**ERROR AMP**
IC811	**TLP621GR**	**PHOTO COUPLER**
IC831	**AN7812**	**INT CKT**
IC832	AN7809	INT CKT
IC833	**AN7805**	**INT CKT**
IC834	AN79M12	INT CKT
IC1801	**M65617SP**	**INT CKT**
IC2101	AN5170K	INT CKT
IC2201	**AN5819K**	**INT CKT**
IC2202	TC4066BP	INT CKT
IC2301	**AN5275**	**INT CKT**
IC2331	BA15218N	INT CKT
IC2401	**CXA2021S**	**INT CKT**

REF NO.	PART NO.	DESCRIPTION
IC3031	M52055P	INT CKT
IC3301	**AN5862K**	**INT CKT**
IC3580	TC4066BP	INT CKT
IC4301	**TC74HC4066AL**	**INT CKT**
IC4402	TC4066BP	INT CKT
IC6501	**MC141622AFT**	**INT CKT**
IC7001	STK392-110	INT CKT
IC7002	**STK392-110**	**INT CKT**
IC7101	24LC32TI/SM	EPROM
IC7102	**SN74HC74NSTL**	**INT CKT**
IC7103	JLC1562BFEL	INT CKT
IC7104	**TLC2932IPWL**	**INT CKT**
IC7105	MC33064D-5R2	RST IC
IC7106	**SC430409CFC**	**INT CKT**
IC7107	TVSA0030	INT CKT
IC7108	**TVSA0342**	**INT CKT**
IC7109	M62354FP-E2	INT CKT
IC7110	**TVSA0036**	**INT CKT**
IC7111	LC78815M-TLM	INT CKT
IC7112	**LC78815M-TLM**	**INT CKT**
IC7113	LC78815M-TLM	INT CKT
IC7116	**UPC4570G2-E2**	**INT CKT**
IC7117	UPC4570G2-E2	INT CKT
IC7118	**UPC4570G2-E2**	**INT CKT**
IC7120	SN74HC00NSL	INT CKT
		COILS
LC3201	EXCEMT101BTS	L-C NETWORK
LC3202	**EXCEMT101BTS**	**L-C NETWORK**
LC3203	EXCEMT101BTS	L-C NETWORK
LC3204	**EXCEMT101BTS**	**L-C NETWORK**
L001	EXCELSA35T	FERRITE BEAD
L003	**TLUABTA4R7K**	**COIL, PEAKING 4.7UH**
L004	TLUABTA4R7K	COIL, PEAKING 4.7UH
L005	**TLUABTA100K**	**COIL, PEAKING 10UH**
L008	TLUABTA120K	COIL, PEAKING 12UH
L009	**EXCELSA35T**	**FERRITE BEAD**
L013	EXCELSA35T	FERRITE BEAD
L014	**EXCELSA35T**	**FERRITE BEAD**
L021	TLTACT390K	COIL, PEAKING 39UH
L103	**TLTACT120J**	**COIL, PEAKING 12UH**
L104	TLUABTA1R0K	COIL, PEAKING 1.0UH
L105	**EIV7EN053B**	**COIL, VCO**
L106	TLTACT180J	COIL, PEAKING 18UH
L107	**TLUABTA1R0K**	**COIL, PEAKING 1.0UH**
L108	TLUABTA1R0K	COIL, PEAKING 1.0UH
L109	**EXCELSA35T**	**FERRITE BEAD**
L110	TLUABTA1R0K	COIL, PEAKING 1.0UH
L351	**ELEBD101KA**	**COIL, PEAKING 100UH**
L352	TLTACT820K	COIL, PEAKING 82UH
L353	**TLTACT820K**	**COIL, PEAKING 82UH**
L371	ELEBD101KA	COIL, PEAKING 100UH

REPLACEMENT PARTS LIST

Models: PT-51G44A/CA, PT-51G54A/CA & PT-61G54A/CA

Important Safety Notice: Components printed in **BOLD TYPE** have special characteristics important for safety. When replacing any of these components use only manufacturer's specified parts.

REF NO.	PART NO.	DESCRIPTION
L372	**TLTACT820K**	**COIL, PEAKING 82UH**
L373	TLTACT820K	COIL, PEAKING 82UH
L391	**ELEBD101KA**	**COIL, PEAKING 100UH**
L392	TLTACT820K	COIL, PEAKING 82UH
L393	**TLTACT820K**	**COIL, PEAKING 82UH**
L552	EXCELSA35B	FERRITE BEAD
L553	**EXCELSA35B**	**FERRITE BEAD**
L581	EXCELDR35C	FERRITE BEAD
L751	**TLH15733M**	**COIL, TOP/BOTTOM PHASING**
L805	EXCELSA35T	FERRITE BEAD
L806	**EXCELSA35T**	**FERRITE BEAD**
L808	EXCELDR35	FERRITE BEAD
L810	**EXCELSA35T**	**FERRITE BEAD**
L811	EXCELSA35T	FERRITE BEAD
L812	**EXCELSA35B**	**FERRITE BEAD**
L831	EXCELSA35B	FERRITE BEAD
L832	**EXCELSA39E**	**FERRITE BEAD**
L833	TLP15103S	COIL, CHOKE
L834	**EXCELSA35T**	**FERRITE BEAD**
L835	EXCELSA35T	FERRITE BEAD
L836	**EXCELSA35T**	**FERRITE BEAD**
L837	EXCELSA35T	FERRITE BEAD
L838	**EXCELSA35T**	**FERRITE BEAD**
L839	EXCELSA35T	FERRITE BEAD
L841	**ELEIE220KA**	**COIL 22UH**
L842	ELEIE220KA	COIL 22UH
L843	**EXCELSA35T**	**FERRITE BEAD**
L883	TLUABTA100K	COIL, PEAKING 10UH
L884	**TLTACT100K**	**COIL, PEAKING 10UH**
L1109	TLTACT100J	COIL, PEAKING 10UH
L1110	**TLTACT100J**	**COIL, PEAKING 10UH**
L1801	TLTACT1R5K	COIL, PEAKING 1.5UH
L1803	**TLTACT2R2K**	**COIL, PEAKING 2.2UH**
L1804	TLTACT150J	COIL, PEAKING 15UH
L1806	**TLTACT1R0K**	**COIL, PEAKING 1UH**
L1807	TLTACT1R0K	COIL, PEAKING 1UH
L1808	**EXCELDR25**	**FERRITE BEAD**
L2101	TLTACT120K	COIL, PEAKING 12UH
L2103	**TLTACT150K**	**COIL, PEAKING 15UH**
L2104	TLTACT330K	COIL, PEAKING 33UH
L2105	**TLTACT1R2K**	**COIL, PEAKING 1.2UH**
L2106	TLTACT560K	COIL, PEAKING 56UH
L2107	**TLTACT1R2K**	**COIL, PEAKING 1.2UH**
L2109	EIV7EN053B	COIL, VCO
L2201	**ELESN102JA**	**COIL, PEAKING 1000UH**
L2202	ELESN471JA	COIL, PEAKING 470UH
L2801	**ELF18D850B**	**LINE FILTER**
L2802	**ELF18D650M**	**LINE FILTER**
L3204	**TLTACT120K**	**COIL, PEAKING 12UH**
L3210	TLUABTA100K	COIL, PEAKING 10UH
L3308	**TLTACT100K**	**COIL, PEAKING 10UH**

REF NO.	PART NO.	DESCRIPTION
L3333	TLTACT100K	COIL, PEAKING 10UH
L4301	**TLTACT2R2K**	**COIL, PEAKING 2.2UH**
L6501	TLTACT220K	COIL, PEAKING 22UH
L6505	**TLTACT390K**	**COIL, PEAKING 39UH**
L6506	TLTACT390K	COIL, PEAKING 39UH
L6507	**TLTACT220K**	**COIL, PEAKING 22UH**
L6508	TLTACT220K	COIL, PEAKING 22UH
L6509	**TLTACT3R3K**	**COIL, PEAKING 3.3UH**
L6511	TLTACT390K	COIL, PEAKING 39UH
L6512	**TLTACT390K**	**COIL, PEAKING 39UH**
L6517	EXCELDR25C	FERRITE BEAD
L7032	**TLUABTA1R0K**	**COIL, PEAKING 1.0UH**
L7101	EXCELDR35	FERRITE BEAD
L7103	**EXCELDR35**	**FERRITE BEAD**
L7104	EXCELDR35	FERRITE BEAD
L7105	**EXCELDR35**	**FERRITE BEAD**
L7106	TLTACT330J	COIL, PEAKING 33UH
		TRANSISTORS
Q001	2SB709ARTX	TRANSISTOR
Q002	**2SD601ARTX**	**TRANSISTOR**
Q004	2SB709ARTX	TRANSISTOR
Q005	**2SD601ARTX**	**TRANSISTOR**
Q302	2SD601ARTX	TRANSISTOR
Q303	**2SB709ARTX**	**TRANSISTOR**
Q304	2SB709ARTX	TRANSISTOR
Q305	**2SD601ARTX**	**TRANSISTOR**
Q306	2SD601ARTX	TRANSISTOR
Q353	**2SC3063**	**TRANSISTOR**
Q356	2SB1011	TRANSISTOR
Q373	**2SC3063**	**TRANSISTOR**
Q376	2SB1011	TRANSISTOR
Q393	**2SC3063**	**TRANSISTOR**
Q396	2SB1011	TRANSISTOR
Q397	**2SC1473A**	**TRANSISTOR**
Q398	2SC1473A	TRANSISTOR
Q401	**2SD601ARTX**	**TRANSISTOR**
Q402	2SB709ARTX	TRANSISTOR
Q410	**2SD601ARTX**	**TRANSISTOR**
Q411	2SD601ARTX	TRANSISTOR
Q451	**2SC1685QRS**	**TRANSISTOR**
Q452	2SC1685QRS	TRANSISTOR
Q453	**2SC1685QRS**	**TRANSISTOR**
Q501	2SC4212H	TRANSISTOR
Q551	**2SD2553MA**	**TRANSISTOR**
Q561	2SC1685QRS	TRANSISTOR
Q601	**2SD601ARTX**	**TRANSISTOR**
Q602	2SD601ARTX	TRANSISTOR
Q751	**2SD1499P**	**TRANSISTOR**
Q752	2SA564AQRSTA	TRANSISTOR
Q753	**2SC1685QRS**	**TRANSISTOR**
Q801	**FS18SM-10-AB**	**TRANSISTOR**

REPLACEMENT PARTS LIST

Models: PT-51G44A/CA, PT-51G54A/CA & PT-61G54A/CA

Important Safety Notice: Components printed in **BOLD TYPE** have special characteristics important for safety. When replacing any of these components use only manufacturer's specified parts.

REF NO.	PART NO.	DESCRIPTION
Q802	2SC1685QRS	TRANSISTOR
Q803	2SA564AQRSTA	TRANSISTOR
Q810	2SC1685QRS	TRANSISTOR
Q831	2SA19610QAHW	TRANSISTOR
Q832	2SA564AQRSTA	TRANSISTOR
Q833	2SC1473R	TRANSISTOR
Q834	2SB709ARTX	TRANSISTOR
Q1110	2SD601ARTX	TRANSISTOR
Q1551	2SA564AQRSTA	TRANSISTOR
Q1552	2SC4635-YB7	TRANSISTOR
Q1553	2SC1685QRS	TRANSISTOR
Q1571	2SC1473R	TRANSISTOR
Q1572	2SC1473R	TRANSISTOR
Q1581	2SC1685QRS	TRANSISTOR
Q1582	2SD601ARTX	TRANSISTOR
Q1583	2SA564AQRSTA	TRANSISTOR
Q1801	2SD601ARTX	TRANSISTOR
Q1802	2SD601ARTX	TRANSISTOR
Q1803	2SD601ARTX	TRANSISTOR
Q1804	2SB709ARTX	TRANSISTOR
Q1805	2SB709ARTX	TRANSISTOR
Q1901	2SC1685QRS	TRANSISTOR
Q1902	2SC1685QRS	TRANSISTOR
Q1903	2SD601ARTX	TRANSISTOR
Q1904	2SD601ARTX	TRANSISTOR
Q1905	2SD601ARTX	TRANSISTOR
Q1906	2SD601ARTX	TRANSISTOR
Q1907	2SD601ARTX	TRANSISTOR
Q1908	2SD601ARTX	TRANSISTOR
Q1909	2SD601ARTX	TRANSISTOR
Q2101	2SD601ARTX	TRANSISTOR
Q2201	2SD601ARTX	TRANSISTOR
Q2202	2SD601ARTX	TRANSISTOR
Q2203	2SD601ARTX	TRANSISTOR
Q2204	2SD601ARTX	TRANSISTOR
Q2331	2SC1685QRS	TRANSISTOR
Q2332	2SC1685QRS	TRANSISTOR
Q2333	2SA564AQRSTA	TRANSISTOR
Q3001	2SC1685QRS	TRANSISTOR
Q3003	2SC1685QRS	TRANSISTOR
Q3004	2SC1685QRS	TRANSISTOR
Q3005	2SC1685QRS	TRANSISTOR
Q3006	2SC1685QRS	TRANSISTOR
Q3010	2SC1685QRS	TRANSISTOR
Q3015	2SC1685QRS	TRANSISTOR
Q3200	2SD601ARTX	TRANSISTOR
Q3201	2SD601ARTX	TRANSISTOR
Q3203	2SD601ARTX	TRANSISTOR
Q3206	2SD601ARTX	TRANSISTOR
Q3208	2SB709ARTX	TRANSISTOR
Q3209	2SD601ARTX	TRANSISTOR

REF NO.	PART NO.	DESCRIPTION
Q3210	2SD601ARTX	TRANSISTOR
Q3211	2SD601ARTX	TRANSISTOR
Q3212	2SD601ARTX	TRANSISTOR
Q3220	2SD601ARTX	TRANSISTOR
Q3221	2SD601ARTX	TRANSISTOR
Q3222	2SD601ARTX	TRANSISTOR
Q3223	2SD601ARTX	TRANSISTOR
Q3580	2SB709ARTX	TRANSISTOR
Q3581	2SD601ARTX	TRANSISTOR
Q3582	2SD601ARTX	TRANSISTOR
Q3583	2SD601ARTX	TRANSISTOR
Q3584	2SD601ARTX	TRANSISTOR
Q3585	2SD601ARTX	TRANSISTOR
Q3586	2SD601ARTX	TRANSISTOR
Q4108	2SD601ARTX	TRANSISTOR
Q4109	2SD601ARTX	TRANSISTOR
Q4110	2SD601ARTX	TRANSISTOR
Q4111	2SD601ARTX	TRANSISTOR
Q4131	2SB709ARTX	TRANSISTOR
Q4132	2SD601ARTX	TRANSISTOR
Q4141	2SB709ARTX	TRANSISTOR
Q4142	2SD601ARTX	TRANSISTOR
Q4151	2SB709ARTX	TRANSISTOR
Q4152	2SD601ARTX	TRANSISTOR
Q4154	2SB709ARTX	TRANSISTOR
Q4155	2SD601ARTX	TRANSISTOR
Q4156	2SB709ARTX	TRANSISTOR
Q4251	2SB709ARTX	TRANSISTOR
Q4302	2SD601ARTX	TRANSISTOR
Q4309	2SB709ARTX	TRANSISTOR
Q4310	2SD601ARTX	TRANSISTOR
Q4311	2SB709ARTX	TRANSISTOR
Q4312	2SD601ARTX	TRANSISTOR
Q4313	2SD601ARTX	TRANSISTOR
Q4315	2SC1384QR	TRANSISTOR
Q6501	2SB709ARTX	TRANSISTOR
Q6502	2SD601ARTX	TRANSISTOR
Q6503	2SD601ARTX	TRANSISTOR
Q6504	2SD601ARTX	TRANSISTOR
Q6505	2SD601ARTX	TRANSISTOR
Q6506	2SD601ARTX	TRANSISTOR
Q6507	2SD601ARTX	TRANSISTOR
Q6508	2SB709ARTX	TRANSISTOR
Q6510	2SD601ARTX	TRANSISTOR
Q6511	2SD601ARTX	TRANSISTOR
Q6513	2SD601ARTX	TRANSISTOR
Q6514	2SD601ARTX	TRANSISTOR
Q6515	2SD601ARTX	TRANSISTOR
Q7006	2SD601ARTX	TRANSISTOR
Q7007	2SD601ARTX	TRANSISTOR
Q7031	2SB709ARTX	TRANSISTOR

REPLACEMENT PARTS LIST

Models: PT-51G44A/CA, PT-51G54A/CA & PT-61G54A/CA

Important Safety Notice: Components printed in **BOLD TYPE** have special characteristics important for safety. When replacing any of these components use only manufacturer's specified parts.

REF NO.	PART NO.	DESCRIPTION
Q7103	2SB709ARTX	TRANSISTOR
Q7104	2SB709ARTX	TRANSISTOR
Q7105	2SB709ARTX	TRANSISTOR
Q7106	2SD601ARTX	TRANSISTOR
Q7107	2SD601ARTX	TRANSISTOR
		RELAYS
RL801	**TSEH8007**	**RELAY**
		RESISTORS
R002	ERJ6GEYJ182	RES,M 1.8K-J-1/10
R003	ERJ6GEYJ221	RES,M 220-J-1/10
R004	ERJ6GEYJ331	RES,M 330-J-1/10
R005	ERJ6GEYJ101	RES,M 100-J-1/10
R006	ERJ6GEYJ473	RES,M 47K-J-1/10
R007	ERJ6GEYJ101	RES,M 100-J-1/10
R014	ERJ6GEYJ103	RES,M 10K-J-1/10
R015	ERJ6GEYJ473	RES,M 47K-J-1/10
R016	ERJ6GEYJ472	RES,M 4.7K-J-1/10
R017	ERJ6GEYJ472	RES,M 4.7K-J-1/10
R019	ERJ6GEYJ151	RES,M 150-J-1/10
R020	ERJ6GEYJ474	RES,M 470K-J-1/10
R021	ERJ6GEYJ101	RES,M 100-J-1/10
R022	ERJ6GEYJ101	RES,M 100-J-1/10
R023	ERJ6GEYJ101	RES,M 100-J-1/10
R025	ERJ6GEYJ682	RES,M 6.8K-J-1/10
R026	ERJ6GEYJ222	RES,M 2.2K-J-1/10
R028	ERJ6GEYJ331	RES,M 330-J-1/10
R029	ERJ6GEYJ562	RES,M 5.6K-J-1/10
R030	ERJ6ENF1002	RES,M 10K-F-1/10
R031	ERJ6GEYJ121	RES,M 120-J-1/10
R032	ERJ6GEYJ222	RES,M 2.2K-J-1/10
R033	ERJ6GEYJ562	RES,M 5.6K-J-1/10
R034	ERJ6GEYJ102	RES,M 1K-J-1/10
R035	ERJ6GEYJ103	RES,M 10K-J-1/10
R036	ERJ6GEYJ103	RES,M 10K-J-1/10
R037	ERJ6GEYJ101	RES,M 100-J-1/10
R038	ERJ6GEYJ182	RES,M 1.8K-J-1/10
R040	ERJ6GEYJ103	RES,M 10K-J-1/10
R041	ERJ6GEYJ122	RES,M 1.2K-J-1/10
R042	ERJ6GEYJ391	RES,M 390-J-1/10
R043	ERJ6GEYJ103	RES,M 10K-J-1/10
R044	ERJ6GEYJ154	RES,M 150K-J-1/10
R045	ERJ6GEYJ684	RES,M 680K-J-1/10
R046	ERJ6GEYJ102	RES,M 1K-J-1/10
R047	ERJ6GEYJ333	RES,M 33K-J-1/10
R048	ERJ6GEYJ221	RES,M 220-J-1/10
R049	ERJ6GEYJ221	RES,M 220-J-1/10
R050	ERJ6GEYJ103	RES,M 10K-J-1/10
R052	ERJ6GEYJ103	RES,M 10K-J-1/10
R053	ERJ6GEYJ101	RES,M 100-J-1/10
R054	ERJ6GEYJ101	RES,M 100-J-1/10
R055	ERJ6GEYJ101	RES,M 100-J-1/10

REF NO.	PART NO.	DESCRIPTION
R056	ERJ6GEYJ101	RES,M 100-J-1/10
R057	**ERJ6GEYJ152**	**RES,M 1.5K-J-1/10**
R058	ERJ6GEYJ101	RES,M 100-J-1/10
R059	**ERJ6GEYJ392**	**RES,M 3.9K-J-1/10**
R060	ERJ6GEYJ101	RES,M 100-J-1/10
R061	**ERJ6GEYJ101**	**RES,M 100-J-1/10**
R062	ERJ6GEYJ123	RES,M 12K-J-1/10
R063	**ERJ6GEYJ123**	**RES,M 12K-J-1/10**
R064	ERJ6GEYJ222	RES,M 2.2K-J-1/10
R065	**ERJ6GEYJ103**	**RES,M 10K-J-1/10**
R066	ERJ6GEYJ103	RES,M 10K-J-1/10
R067	**ERJ6GEYJ103**	**RES,M 10K-J-1/10**
R068	ERJ6GEYJ103	RES,M 10K-J-1/10
R069	**ERJ6GEYJ103**	**RES,M 10K-J-1/10**
R070	ERJ6GEYJ102	RES,M 1K-J-1/10
R071	**ERJ6GEYJ101**	**RES,M 100-J-1/10**
R072	ERDS2TJ101	RES,C 100-J-1/4
R072	**ERDS2TJ222**	**RES,C 2.2K-J-1/4**
R073	ERDS2TJ222	RES,C 2.2K-J-1/4
R073	**ERDS2TJ471**	**RES,C 470-J-1/4**
R074	ERDS1FJ473	RES,C 47K-J-1/2W
R075	**ERJ6GEYJ103**	**RES,M 10K-J-1/10**
R078	ERDS1FJ473	RES,C 47K-J-1/2W
R080	**ERDS2TJ222**	**RES,C 2.2K-J-1/4**
R081	ERDS2TJ222	RES,C 2.2K-J-1/4
R082	**ERDS2TJ332**	**RES,C 3.3K-J-1/4**
R083	ERDS2TJ562	RES,C 5.6K-J-1/4
R084	**ERDS2TJ103**	**RES,C 10K-J-1/4**
R085	ERDS2TJ223	RES,C 22K-J-1/4
R086	**ERDS2TJ101**	**RES,C 100-J-1/4**
R089	ERJ6GEYJ103	RES,M 10K-J-1/10
R093	**ERJ6GEYJ101**	**RES,M 100-J-1/10**
R099	ERJ6GEYJ332	RES,M 3.3K-J-1/10
R101	**ERJ6GEYJ750**	**RES,M 75-J-1/10**
R102	ERJ6GEYJ683	RES,M 68K-J-1/10
R103	**ERJ6GEYJ183**	**RES,M 18K-J-1/10**
R104	ERJ6GEYJ561	RES,M 560-J-1/10
R105	**ERJ6GEYJ561**	**RES,M 560-J-1/10**
R107	ERJ6GEYJ222	RES,M 2.2K-J-1/10
R108	**ERJ6GEYJ471**	**RES,M 470-J-1/10**
R111	ERJ6GEYJ101	RES,M 100-J-1/10
R152	**ERJ6GEYJ183**	**RES,M 18K-J-1/10**
R153	ERJ6GEYJ223	RES,M 22K-J-1/10
R154	**ERJ6GEYJ393**	**RES,M 39K-J-1/10**
R201	ERJ6GEYJ221	RES,M 220-J-1/10
R303	**ERJ6GEYJ682**	**RES,M 6.8K-J-1/10**
R304	ERJ6GEYJ332	RES,M 3.3K-J-1/10
R305	**ERJ6ENF3001**	**RES,M 3K-F-1/10**
R306	ERJ6ENF1431	RES,M 1.43K-F-1/10
R308	**ERJ6GEYJ332**	**RES,M 3.3K-J-1/10**
R309	ERJ6GEYJ273	RES,M 27K-J-1/10

REPLACEMENT PARTS LIST

Models: PT-51G44A/CA, PT-51G54A/CA & PT-61G54A/CA

Important Safety Notice: Components printed in **BOLD TYPE** have special characteristics important for safety. When replacing any of these components use only manufacturer's specified parts.

REF NO.	PART NO.	DESCRIPTION
R310	**ERJ6GEYJ393**	**RES,M 39K-J-1/10**
R313	ERJ6GEYJ471	RES,M 470-J-1/10
R314	**ERJ6GEYJ122**	**RES,M 1.2K-J-1/10**
R317	ERJ6GEYJ224	RES,M 220K-J-1/10
R321	**ERJ6GEYJ471**	**RES,M 470-J-1/10**
R322	ERJ6GEYJ122	RES,M 1.2K-J-1/10
R325	**ERDS2TJ102**	**RES,C 1K-J-1/4**
R326	ERDS2TJ102	RES,C 1K-J-1/4
R327	**ERDS2TJ102**	**RES,C 1K-J-1/4**
R331	ERC12GK102	RES,S 1K-K-1/2
R332	**ERC12GK102**	**RES,S 1K-K-1/2**
R333	ERC12GK102	RES,S 1K-K-1/2
R349	**ERDS2TJ124**	**RES,C 120K-J-1/4**
R350	ERDS2TJ563	RES,C 56K-J-1/4
R351	**ERDS2TJ225**	**RES,C 2.2MEG-J-1/4**
R352	ERDS1TJ823	RES,C 82K-J-1/2
R353	**ERDS2TJ334**	**RES,C 330K-J-1/4**
R354	ERDS2TJ122	RES,C 1.2K-J-1/4
R355	**ERDS1TJ101**	**RES,C 100-J-1/2**
R356	ERDS2TJ124	RES,C 120K-J-1/4
R358	**ERDS2TJ273**	**RES,C 27K-J-1/4**
R359	ERDS2TJ472	RES,C 4.7K-J-1/4
R360	**ER0S2CKF3901**	**RES,M 3.9K-F-1/4**
R362	ERC12GK102	RES,S 1K-K-1/2
R363	**ERG3SJS562H**	**RES,M 5.6K-J-3W**
R364	ERG3SJS472H	RES,M 4.7K-J-3W
R370	**ER0S2CKF3901**	**RES,M 3.9K-F-1/4**
R372	ERC12GK102	RES,S 1K-K-1/2
R373	**ERG3SJS562H**	**RES,M 5.6K-J-3W**
R374	ERG3SJS472H	RES,M 4.7K-J-3W
R375	**ERDS1TJ101**	**RES,C 100-J-1/2**
R376	ERDS2TJ124	RES,C 120K-J-1/4
R377	**ERDS2TJ105**	**RES,C 1MEG-J-1/4**
R378	ERDS2TJ273	RES,C 27K-J-1/4
R379	**ERDS2TJ472**	**RES,C 4.7K-J-1/4**
R380	ER0S2CKF3901	RES,M 3.9K-F-1/4
R382	**ERC12GK102**	**RES,S 1K-K-1/2**
R383	ERG3SJS562H	RES,M 5.6K-J-3W
R384	**ERG3SJS472H**	**RES,M 4.7K-J-3W**
R395	ERDS1TJ101	RES,C 100-J-1/2
R396	**ERDS2TJ124**	**RES,C 120K-J-1/4**
R398	ERDS2TJ273	RES,C 27K-J-1/4
R399	**ERDS2TJ472**	**RES,C 4.7K-J-1/4**
R401	ERJ6GEYJ102	RES,M 1K-J-1/10
R405	**ERJ6GEYJ471**	**RES,M 470-J-1/10**
R406	ERJ6GEYJ102	RES,M 1K-J-1/10
R407	**ERJ6GEYJ471**	**RES,M 470-J-1/10**
R408	ERJ6GEYJ102	RES,M 1K-J-1/10
R410	**ERJ6GEYJ223**	**RES,M 22K-J-1/10**
R411	ERJ6GEYJ103	RES,M 10K-J-1/10
R412	**ERJ6GEYJ222**	**RES,M 2.2K-J-1/10**
R413	ERJ6GEYJ222	RES,M 2.2K-J-1/10
R414	**ERJ6GEYJ103**	**RES,M 10K-J-1/10**
R452	ERDS2TJ563	RES,C 56K-J-1/4
R453	**ERQ12HJ1R0**	**RES,F 1.0-J-1/2**
R454	ERDS2TJ153	RES,C 15K-J-1/4
R455	**ERDS2TJ562**	**RES,C 5.6K-J-1/4**
R456	ERDS2TJ681	RES,C 680-J-1/4
R457	**ERDS2TJ153**	**RES,C 15K-J-1/4**
R458	ERDS1FJ391	RES,C 390-J-1/2
R459	**ERQ14AJ2R2**	**RES,F 2.2-J-1/4**
R460	ERDS2TJ683	RES,C 68K-J-1/4
R461	**ERDS1FJ122**	**RES,C 1.2K-J-1/2**
R462	ERDS2TJ333	RES,C 33K-J-1/4
R463	**ERDS2TJ224**	**RES,C 220K-J-1/4**
R465	ERDS2TJ471	RES,C 470-J-1/4
R466	**ERDS2TJ153**	**RES,C 15K-J-1/4**
R467	ERDS2TJ564	RES,C 560K-J-1/4
R468	**ERDS2TJ332**	**RES,C 3.3K-J-1/4**
R469	ERDS2TJ123	RES,C 12K-J-1/4
R470	**ERDS2TJ331**	**RES,C 330-J-1/4**
R471	ERDS2TJ331	RES,C 330-J-1/4
R472	**ERDS2TJ331**	**RES,C 330-J-1/4**
R473	ER0S2CKF4701	RES,M 4.7K-F-1/4
R474	**ER0S2CKF7151**	**RES,M 7.15K-F-1/4**
R476	ER0S2CKF1431	RES,M 1.43K-F-1/4W
R477	**ER0S2CKF1911**	**RES,M 1.91K-F-1/4W**
R478	ER0S2CKF3242	RES,M 32.4K-F-1/4W
R479	**ER0S2CKF1502**	**RES,M 15K-F-1/4**
R480	ER0S2CKF1202	RES,M 12K-F-1/4
R481	**ERDS2TJ103**	**RES,C 10K-J-1/4**
R483	ERDS2TJ103	RES,C 10K-J-1/4
R484	**ERDS2TJ102**	**RES,C 1K-J-1/4**
R487	ERDS2TJ562	RES,C 5.6K-J-1/4
R488	**ERDS2TJ184**	**RES,C 180K-J-1/4**
R489	ERDS2TJ102	RES,C 1K-J-1/4
R501	**ERJ6GEYJ102**	**RES,M 1K-J-1/10**
R502	ERJ6GEYJ562	RES,M 5.6K-J-1/10
R503	**ERJ6GEYJ822**	**RES,M 8.2K-J-1/10**
R504	ERJ6GEYJ101	RES,M 100-J-1/10
R506	**ERJ6GEYJ182**	**RES,M 1.8K-J-1/10**
R507	ERJ6GEYJ392	RES,M 3.9K-J-1/10
R508	**ERJ6GEYJ562**	**RES,M 5.6K-J-1/10**
R509	ERDS1FJ821	RES,C 820-J-1/2
R521	**ERQ3CJ182L**	**RES,F 1.8K-J-3W**
R522	ERG3SJ332	RES,M 3.3K-J-3W
R523	**ERDS2TJ471**	**RES,C 470-J-1/4**
R524	ERDS2TJ561	RES,C 560-J-1/4
R540	**ERJ6GEYJ101**	**RES,M 100-J-1/10**
R543	ERJ6GEYJ183	RES,M 18K-J-1/10
R552	**ERF5ZK2R2**	**RES,W 2.2-K-5W**
R553	ER0S2CKF1002	RES,M 10K-F-1/4

REPLACEMENT PARTS LIST

Models: PT-51G44A/CA, PT-51G54A/CA & PT-61G54A/CA

Important Safety Notice: Components printed in **BOLD TYPE** have special characteristics important for safety. When replacing any of these components use only manufacturer's specified parts.

REF NO.	PART NO.	DESCRIPTION
R556	ER0S2CKF4752	RES,M 47.5K-F-1/4W
R557	ER0S2CKF3322	RES,M 33.2K-F-1/4W
R560	ERDS2TJ392	RES,C 3.9K-J-1/4
R561	ERDS2TJ222	RES,C 2.2K-J-1/4
R562	ERDS2TJ273	RES,C 27K-J-1/4
R581	ERDS1TJ394	RES,C 390K-J-1/2
R583	**ERQ2CJP1R0**	**RES,F 1.0-J-2W**
R584	**ERQ12HKR33**	**RES,F .33-K-1/2**
R585	ERG1SJ471	RES,M 470-J-1W
R608	ERJ6GEYJ221	RES,M 220-J-1/10
R609	ERJ6GEYJ221	RES,M 220-J-1/10
R610	ERJ6GEYJ221	RES,M 220-J-1/10
R611	ECUX1H181JCX	CAP,C 180PF-J-50V
R612	ECUX1H181JCX	CAP,C 180PF-J-50V
R613	ECUX1H181JCX	CAP,C 180PF-J-50V
R614	ERJ6GEYJ332	RES,M 3.3K-J-1/10
R615	ERJ6GEYJ562	RES,M 5.6K-J-1/10
R616	ERJ6GEYJ102	RES,M 1K-J-1/10
R617	ERJ6GEYJ222	RES,M 2.2K-J-1/10
R618	ERJ6GEYJ223	RES,M 22K-J-1/10
R619	ERJ6GEYJ682	RES,M 6.8K-J-1/10
R620	ERJ6GEYJ471	RES,M 470-J-1/10
R754	ERDS2TJ562	RES,C 5.6K-J-1/4
R755	ERDS2TJ122	RES,C 1.2K-J-1/4
R755	ERDS2TJ562	RES,C 5.6K-J-1/4
R756	ERDS2TJ561	RES,C 560-J-1/4
R757	ERDS2TJ222	RES,C 2.2K-J-1/4
R758	ERQ2CJ270L	RES,F 27-J-2W
R760	ERDS2TJ103	RES,C 10K-J-1/4
R802	**TAR26FJ1R5Z**	**RES,W 1.5-J-15W**
R804	ERDS1TJ104	RES,C 100K-J-1/2
R805	ERDS1TJ104	RES,C 100K-J-1/2
R806	ERDS1TJ104	RES,C 100K-J-1/2
R807	ERDS2TJ472	RES,C 4.7K-J-1/4
R809	ERDS2TJ104	RES,C 100K-J-1/4
R810	**ERX12SJR22**	**RES,M .22-J-1/2**
R811	**ERX12SJR22**	**RES,M .22-J-1/2**
R812	ERDS2TJ103	RES,C 10K-J-1/4
R813	ERDS1FJ471	RES,C 470-J-1/2
R814	ERDS2TJ4R7	RES,C 4.7-J-1/4
R815	ERDS2TJ222	RES,C 2.2K-J-1/4
R816	ERDS2TJ471	RES,C 470-J-1/4
R817	ERDS2TJ152	RES,C 1.5K-J-1/4
R818	ERDS2TJ100	RES,C 10-J-1/4
R819	**ERX12SJR22**	**RES,M .22-J-1/2**
R820	ERDS1FJ470	RES,C 47-J-1/2
R821	ERDS2TJ471	RES,C 470-J-1/4
R822	ERDS2TJ104	RES,C 100K-J-1/4
R823	ERDS2TJ222	RES,C 2.2K-J-1/4
R825	ERDS2TJ152	RES,C 1.5K-J-1/4
R826	ERDS2TJ333	RES,C 33K-J-1/4
R827	ERDS2TJ103	RES,C 10K-J-1/4
	ERC12GM825	RES,S 8.2MEG-M-1/2
R832	ERDS2TJ102	RES,C 1K-J-1/4
	ERX1SJ1R0	RES,M 1.0-J-1W
R836	ERX1SJ1R0	RES,M 1.0-J-1W
	ERDS1FJ122	RES,C 1.2K-J-1/2
R838	ERDS2TJ562	RES,C 5.6K-J-1/4
	ERDS2TJ563	RES,C 56K-J-1/4
R840	ERDS2TJ682	RES,C 6.8K-J-1/4
	ERX1SJR39	RES,M .39-J-1W
R842	ERDS2TJ102	RES,C 1K-J-1/4
	ERDS2TJ222	RES,C 2.2K-J-1/4
R844	ERDS2TJ562	RES,C 5.6K-J-1/4
	ERDS2TJ273	RES,C 27K-J-1/4
R846	ERDS2TJ102	RES,C 1K-J-1/4
	ERX1SJR39	RES,M .39-J-1W
R848	ERJ6GEYJ122	RES,M 1.2K-J-1/10
	ERJ6GEYJ391	RES,M 390-J-1/10
R850	ERJ6GEYJ333	RES,M 33K-J-1/10
	ERJ6GEYJ683	RES,M 68K-J-1/10
R852	ERG2SJS823H	RES,M 82K-J-2W
	ERDS2TJ561	RES,C 560-J-1/4
R860	ERDS2TJ222	RES,C 2.2K-J-1/4
	ERQ12HKR22	RES,F .22-K-1/2
R880	ERG2SJS150H	RES,M 15-J-2W
	ERG2SJS120H	RES,M 12-J-2W
R1023	ERJ6GEYJ102	RES,M 1K-J-1/10
	ERJ6GEYJ102	RES,M 1K-J-1/10
R1051	ERJ6GEYJ102	RES,M 1K-J-1/10
	ERJ6GEYJ222	RES,M 2.2K-J-1/10
R1111	ERJ6GEYJ103	RES,M 10K-J-1/10
	ERJ6GEYJ101	RES,M 100-J-1/10
R1243	ERJ6GEYJ102	RES,M 1K-J-1/10
	ERDS2TJ473	RES,C 47K-J-1/4
R1553	ERDS2TJ123	RES,C 12K-J-1/4
	ER0S2CKF2742	RES,M 27.4K-F-1/4W
R1555	ER0S2CKF2741	RES,M 2.74K-F-1/4
R1556	ERDS2TJ101	RES,C 100-J-1/4
R1557	ER0S2CKF3321	RES,M 3.32K-F-1/4W
R1558	ERDS2TJ101	RES,C 100-J-1/4
R1559	ERDS2TJ221	RES,C 220-J-1/4
R1560	ERDS2TJ221	RES,C 220-J-1/4
R1561	ERDS2TJ182	RES,C 1.8K-J-1/4
R1562	ERDS2TJ104	RES,C 100K-J-1/4
R1563	ERG2SJ823	RES,M 82K-J-2W
R1564	ERG2SJ823	RES,M 82K-J-2W
R1565	ERG2SJ823	RES,M 82K-J-2W
R1566	ERG2SJ823	RES,M 82K-J-2W
R1568	ERC12GK333	RES,S 33K-K-1/2
R1571	ERDS2TJ471	RES,C 470-J-1/4
R1572	ERDS2TJ102	RES,C 1K-J-1/4

REPLACEMENT PARTS LIST

Models: PT-51G44A/CA, PT-51G54A/CA & PT-61G54A/CA

Important Safety Notice: Components printed in **BOLD TYPE** have special characteristics important for safety. When replacing any of these components use only manufacturer's specified parts.

REF NO.	PART NO.	DESCRIPTION
R1574	ERDS2TJ123	RES,C 12K-J-1/4
R1575	ERDS2TJ275	RES,C 2.7MEG-J-1/4W
R1576	ERDS2TJ124	RES,C 120K-J-1/4
R1577	ERDS2TJ333	RES,C 33K-J-1/4
R1578	ERDS2TJ102	RES,C 1K-J-1/4
R1581	**ERQ12HJ330**	**RES,F 33-J-1/2**
R1582	**ER0S2CKF1782**	**RES,M 17.8K-F-1/4W**
R1584	**ER0S2CKF7151**	**RES,M 7.15K-F-1/4**
R1585	ERDS2TJ222	RES,C 2.2K-J-1/4
R1586	ERDS2TJ103	RES,C 10K-J-1/4
R1588	ERDS2TJ222	RES,C 2.2K-J-1/4
R1589	ERDS2TJ472	RES,C 4.7K-J-1/4
R1590	ERDS2TJ562	RES,C 5.6K-J-1/4
R1591	ERJ6GEYJ221	RES,M 220-J-1/10
R1593	ERDS2TJ682	RES,C 6.8K-J-1/4
R1594	ERDS2TJ222	RES,C 2.2K-J-1/4
R1801	ERJ6GEYJ301	RES,M 300-J-1/10
R1802	ERJ6GEYJ104	RES,M 100K-J-1/10
R1803	ERJ6GEYJ474	RES,M 470K-J-1/10
R1804	ERJ6GEYJ202	RES,M 2K-J-1/10
R1805	ERJ6GEYJ102	RES,M 1K-J-1/10
R1807	ERJ6GEYJ103	RES,M 10K-J-1/10
R1808	ERJ6GEYJ103	RES,M 10K-J-1/10
R1809	ERJ6GEYJ473	RES,M 47K-J-1/10
R1810	ERJ6GEYJ103	RES,M 10K-J-1/10
R1811	ERJ6GEYJ682	RES,M 6.8K-J-1/10
R1812	ERJ6GEYJ153	RES,M 15K-J-1/10
R1813	ERJ6GEYJ153	RES,M 15K-J-1/10
R1814	ERJ6GEYJ361	RES,M 360-J-1/10
R1815	ERJ6GEYJ471	RES,M 470-J-1/10
R1818	ERJ6GEYJ101	RES,M 100-J-1/10
R1819	ERJ6GEYJ101	RES,M 100-J-1/10
R1822	ERJ6GEYJ682	RES,M 6.8K-J-1/10
R1823	ERJ6GEYJ473	RES,M 47K-J-1/10
R1825	ERJ6GEYJ471	RES,M 470-J-1/10
R1827	ERJ6GEYJ102	RES,M 1K-J-1/10
R1828	ERJ6GEYJ471	RES,M 470-J-1/10
R1830	ERJ6GEYJ102	RES,M 1K-J-1/10
R1856	ERJ6GEYJ153	RES,M 15K-J-1/10
R1901	ERDS2TJ243	RES,C 24K-J-1/4
R1902	ERDS2TJ683	RES,C 68K-J-1/4
R1903	ERDS2TJ103	RES,C 10K-J-1/4
R1904	ERDS2TJ822	RES,C 8.2K-J-1/4
R1905	ERDS2TJ152	RES,C 1.5K-J-1/4
R1906	ERDS2TJ471	RES,C 470-J-1/4
R1907	ERDS2TJ102	RES,C 1K-J-1/4
R1908	ERDS2TJ821	RES,C 820-J-1/4
R1909	ERDS2TJ133	RES,C 13K-J-1/4
R1910	ERJ6GEYJ473	RES,M 47K-J-1/10
R1911	ERJ6GEYJ273	RES,M 27K-J-1/10
R1912	ERJ6GEYJ103	RES,M 10K-J-1/10

REF NO.	PART NO.	DESCRIPTION
R1913	ERJ6GEYJ823	RES,M 82K-J-1/10
R1914	**ERJ6GEYJ223**	**RES,M 22K-J-1/10**
R1915	ERJ6GEYJ332	RES,M 3.3K-J-1/10
R1916	**ERJ6GEYJ471**	**RES,M 470-J-1/10**
R1917	ERJ6GEYJ561	RES,M 560-J-1/10
R1918	ERJ6GEYJ102	RES,M 1K-J-1/10
R1919	ERJ6GEYJ562	RES,M 5.6K-J-1/10
R1920	ERJ6GEYJ683	RES,M 68K-J-1/10
R1921	ERJ6GEYJ103	RES,M 10K-J-1/10
R1922	ERJ6GEYJ682	RES,M 6.8K-J-1/10
R1923	ERJ6GEYJ821	RES,M 820-J-1/10
R1924	ERJ6GEYJ471	RES,M 470-J-1/10
R1925	ERJ6GEYJ182	RES,M 1.8K-J-1/10
R1927	ERJ6GEYJ392	RES,M 3.9K-J-1/10
R1931	ERDS2TJ822	RES,C 8.2K-J-1/4
R1932	ERDS2TJ152	RES,C 1.5K-J-1/4
R1940	ERJ6GEYJ473	RES,M 47K-J-1/10
R1941	ERJ6GEYJ223	RES,M 22K-J-1/10
R1942	ERJ6GEYJ822	RES,M 8.2K-J-1/10
R1943	ERJ6GEYJ122	RES,M 1.2K-J-1/10
R1945	ERJ6GEYJ272	RES,M 2.7K-J-1/10
R1949	ERJ6GEYJ562	RES,M 5.6K-J-1/10
R1950	ERJ6GEYJ182	RES,M 1.8K-J-1/10
R2106	ERJ6GEYJ183	RES,M 18K-J-1/10
R2109	ERJ6GEYJ683	RES,M 68K-J-1/10
R2110	ERJ6GEYJ331	RES,M 330-J-1/10
R2111	ERJ6GEYJ152	RES,M 1.5K-J-1/10
R2112	ERJ6GEYJ331	RES,M 330-J-1/10
R2113	ERJ6GEYJ102	RES,M 1K-J-1/10
R2114	ERJ6GEYJ681	RES,M 680-J-1/10
R2116	ERJ6GEYJ102	RES,M 1K-J-1/10
R2117	ERJ6GEYJ121	RES,M 120-J-1/10
R2118	EVND8AA03B14	CONTROL 10K
R2119	ERJ6GEYJ392	RES,M 3.9K-J-1/10
R2121	ERJ6GEYJ221	RES,M 220-J-1/10
R2122	ERJ6GEYJ473	RES,M 47K-J-1/10
R2123	ERJ6GEYJ473	RES,M 47K-J-1/10
R2124	ERJ6GEYJ332	RES,M 3.3K-J-1/10
R2127	ERJ6GEYJ101	RES,M 100-J-1/10
R2201	ERJ6GEYJ472	RES,M 4.7K-J-1/10
R2202	ERJ6GEYJ153	RES,M 15K-J-1/10
R2203	ERJ6GEYJ104	RES,M 100K-J-1/10
R2204	ERJ6GEYJ473	RES,M 47K-J-1/10
R2205	ERJ6GEYJ154	RES,M 150K-J-1/10
R2206	ERJ6GEYJ472	RES,M 4.7K-J-1/10
R2207	ERJ6GEYJ472	RES,M 4.7K-J-1/10
R2208	ERJ6ENF9102	RES,M 91K-F-1/10
R2212	ERJ6GEYJ682	RES,M 6.8K-J-1/10
R2220	ERJ6GEYJ682	RES,M 6.8K-J-1/10
R2221	ERJ6GEYJ562	RES,M 5.6K-J-1/10
R2231	ERJ6GEYJ223	RES,M 22K-J-1/10

REPLACEMENT PARTS LIST

Models: PT-51G44A/CA, PT-51G54A/CA & PT-61G54A/CA

Important Safety Notice: Components printed in **BOLD TYPE** have special characteristics important for safety. When replacing any of these **components use only** manufacturer's specified parts.

REF NO.	PART NO.	
R2232	ERJ6GEYJ333	**RES,M 33K-J-1/10**
R2233	ERJ6GEYJ153	RES,M 15K-J-1/10
R2234	ERJ6GEYJ154	**RES,M 150K-J-1/10**
R2235	ERJ6GEYJ223	RES,M 22K-J-1/10
R2301	ERJ6GEYJ153	**RES,M 15K-J-1/10**
R2302	ERJ6GEYJ153	RES,M 15K-J-1/10
R2305	ERD25FJ2R2	**RES,C 2.2-J-1/4**
R2306	ERD25FJ2R2	RES,C 2.2-J-1/4
R2310	ERJ6GEYJ682	**RES,M 6.8K-J-1/10**
R2311	ERJ6GEYJ682	RES,M 6.8K-J-1/10
R2315	ERJ6GEYJ822	**RES,M 8.2K-J-1/10**
R2316	ERJ6GEYJ103	RES,M 10K-J-1/10
R2320	ERJ6GEYJ471	**RES,M 470-J-1/10**
R2321	ERJ6GEYJ222	RES,M 2.2K-J-1/10
R2322	ERJ6GEYJ471	**RES,M 470-J-1/10**
R2323	ERJ6GEYJ222	RES,M 2.2K-J-1/10
R2331	ERDS2TJ332	**RES,C 3.3K-J-1/4**
R2332	ERDS2TJ332	RES,C 3.3K-J-1/4
R2333	ERDS2TJ183	**RES,C 18K-J-1/4**
R2334	ERDS2TJ183	RES,C 18K-J-1/4
R2335	ERDS2TJ472	**RES,C 4.7K-J-1/4**
R2336	ERDS2TJ472	RES,C 4.7K-J-1/4
R2337	ERDS2TJ103	**RES,C 10K-J-1/4**
R2338	ERDS2TJ103	RES,C 10K-J-1/4
R2339	ERDS2TJ102	**RES,C 1K-J-1/4**
R2340	ERDS2TJ102	RES,C 1K-J-1/4
R2341	ERDS2TJ473	**RES,C 47K-J-1/4**
R2342	ERDS2TJ473	RES,C 47K-J-1/4
R2343	ERDS2TJ102	**RES,C 1K-J-1/4**
R2344	ERDS2TJ102	RES,C 1K-J-1/4
R2345	ERDS2TJ102	**RES,C 1K-J-1/4**
R2346	ERDS2TJ102	RES,C 1K-J-1/4
R2347	ERDS2TJ223	**RES,C 22K-J-1/4**
R2348	ERDS2TJ101	RES,C 100-J-1/4
R2401	ERJ6GEYJ103	**RES,M 10K-J-1/10**
R2402	ERJ6GEYJ103	RES,M 10K-J-1/10
R2403	ERJ6GEYJ181	**RES,M 180-J-1/10**
R2405	ERJ6GEYJ560	RES,M 56-J-1/10
R2406	ERJ6GEYJ560	**RES,M 56-J-1/10**
R2409	ERJ6GEYJ105	RES,M 1.0MEG-J-1/10
R2801	**ERC12ZGM825**	**RES,S 8.2MEG-M-1/8**
R3001	ERJ6GEYJ473	RES,M 47K-J-1/10
R3002	ERJ6GEYJ104	**RES,M 100K-J-1/10**
R3009	ER0S2CKF82R0	RES,M 82-F-1/4W
R3010	ERDS2TJ184	**RES,C 180K-J-1/4**
R3011	ERDS2TJ184	RES,C 180K-J-1/4
R3012	ER0S2CKF82R0	**RES,M 82-F-1/4W**
R3013	ERDS2TJ184	RES,C 180K-J-1/4
R3014	ERDS2TJ184	**RES,C 180K-J-1/4**
R3015	ER0S2CKF75R0	RES,M 75-F-1/4
R3024	ER0S2CKF75R0	**RES,M 75-F-1/4**

R3027	ERDS2TJ101	RES.C 100-J-1/4
		RES,C 100-J-1/4
R3032	ERDS2TJ102	RES.C 1K-J-1 4
		RES,C 1K-J-1/4
R3034	ERDS2TJ101	RES.C 100-J-1/4
		RES,C 1K-J-1/4
R3038	ERDS2TJ102	RES.C 1K-J-1/4
		RES,C 100-J-1/4
R3040	ERDS2TJ683	RES.C 68K-J-1/4
		RES,C 1K-J-1/4
R3043	ERDS2TJ683	RES.C 68K-J-1/4
		RES,C 22K-J-1/4
R3045	ERDS2TJ101	RES.C 100-J-1/4
		RES,C 12K-J-1/4
R3048	ERDS2TJ392	RES.C 3.9K-J-1/4
		RES,C 100-J-1/4
R3050	ERDS2TJ471	RES.C 470-J-1/4
		RES,C 470-J-1/4
R3053	ERDS2TJ102	RES.C 1K-J-1/4
		RES,C 1K-J-1/4
R3056	ERDS2TJ102	RES.C 1K-J-1/4
		RES,C 470-J-1/4
R3058	ERDS2TJ152	RES.C 1.5K-J-1/4
		RES,C 6.8K-J-1/4
R3062	ERDS2TJ393	RES.C 39K-J-1/4
		RES,C 1K-J-1/4
R3067	ERDS2TJ471	RES,C 470-J-1/4
		RES,C 10K-J-1/4
R3069	ERDS2TJ683	RES,C 68K-J-1/4
		RES,C 1K-J-1/4
R3076	ERDS2TJ123	RES,C 12K-J-1/4
		RES,C 22K-J-1/4
R3082	ERDS2TJ223	RES,C 22K-J-1/4
		RES,C 470-J-1/4
R3088	ERDS2TJ102	RES,C 1K-J-1/4
		RES,C 47-J-1/4
R3200	ERJ6GEYJ471	RES,M 470-J-1/10
R3201	**ERJ6GEYJ152**	**RES,M 1.5K-J-1/10**
R3202	ERJ6GEYJ101	RES,M 100-J-1/10
R3203	**ERJ6GEYJ471**	**RES,M 470-J-1/10**
R3204	ERJ6GEYJ181	RES,M 180-J-1/10
R3211	**ERJ6GEYJ471**	**RES,M 470-J-1/10**
R3212	ERJ6GEYJ152	RES,M 1.5K-J-1/10
R3220	**ERJ6GEYJ473**	**RES,M 47K-J-1/10**
R3221	ERJ6GEYJ223	RES,M 22K-J-1/10
R3222	**ERJ6GEYJ103**	**RES,M 10K-J-1/10**
R3223	ERJ6GEYJ101	RES,M 100-J-1/10
R3230	**ERJ6GEYJ102**	**RES,M 1K-J-1/10**
R3231	ERJ6GEYJ681	RES,M 680-J-1/10
R3233	**ERJ6GEYJ471**	**RES,M 470-J-1/10**
R3234	ERJ6GEYJ621	RES,M 620-J-1/10

REPLACEMENT PARTS LIST

Models: PT-51G44A/CA, PT-51G54A/CA & PT-61G54A/CA

Important Safety Notice: Components printed in **BOLD TYPE** have special characteristics important for safety. When replacing any of these components use only manufacturer's specified parts.

REF NO.	PART NO.	DESCRIPTION
R3235	**ERJ6GEYJ103**	**RES,M 10K-J-1/10**
R3236	ERJ6GEYJ561	RES,M 560-J-1/10
R3237	**ERJ6GEYJ561**	**RES,M 560-J-1/10**
R3240	ERJ6GEYJ103	RES,M 10K-J-1/10
R3245	**ERJ6GEYJ122**	**RES,M 1.2K-J-1/10**
R3247	ERJ6GEYJ122	RES,M 1.2K-J-1/10
R3248	**ERJ6GEYJ182**	**RES,M 1.8K-J-1/10**
R3249	ERJ6GEYJ181	RES,M 180-J-1/10
R3250	**ERJ6GEYJ103**	**RES,M 10K-J-1/10**
R3251	ERJ6GEYJ473	RES,M 47K-J-1/10
R3252	**ERJ6GEYJ393**	**RES,M 39K-J-1/10**
R3253	ERJ6GEYJ223	RES,M 22K-J-1/10
R3254	**ERJ6GEYJ473**	**RES,M 47K-J-1/10**
R3255	ERJ6GEYJ471	RES,M 470-J-1/10
R3256	**ERJ6GEYJ152**	**RES,M 1.5K-J-1/10**
R3260	ERJ6GEYJ471	RES,M 470-J-1/10
R3261	**ERJ6GEYJ152**	**RES,M 1.5K-J-1/10**
R3262	ERJ6GEYJ152	RES,M 1.5K-J-1/10
R3263	**ERJ6GEYJ471**	**RES,M 470-J-1/10**
R3264	ERJ6GEYJ153	RES,M 15K-J-1/10
R3265	**ERJ6GEYJ103**	**RES,M 10K-J-1/10**
R3266	ERJ6GEYJ332	RES,M 3.3K-J-1/10
R3267	**ERJ6GEYJ683**	**RES,M 68K-J-1/10**
R3268	ERJ6GEYJ563	RES,M 56K-J-1/10
R3269	**ERJ6GEYJ562**	**RES,M 5.6K-J-1/10**
R3270	ERJ6GEYJ683	RES,M 68K-J-1/10
R3271	**ERJ6GEYJ393**	**RES,M 39K-J-1/10**
R3272	ERJ6GEYJ223	RES,M 22K-J-1/10
R3273	**ERJ6GEYJ472**	**RES,M 4.7K-J-1/10**
R3274	ERJ6GEYJ473	RES,M 47K-J-1/10
R3301	**ERJ6GEYJ101**	**RES,M 100-J-1/10**
R3302	ERJ6GEYJ101	RES,M 100-J-1/10
R3303	**ERJ6GEYJ101**	**RES,M 100-J-1/10**
R3351	ERJ6GEYJ152	RES,M 1.5K-J-1/10
R3352	**ERJ6GEYJ222**	**RES,M 2.2K-J-1/10**
R3353	ERJ6GEYJ222	RES,M 2.2K-J-1/10
R3419	**ERJ6GEYJ101**	**RES,M 100-J-1/10**
R3575	ERJ6GEYJ823	RES,M 82K-J-1/10
R3576	**ERJ6GEYJ103**	**RES,M 10K-J-1/10**
R3577	ERJ6GEYJ333	RES,M 33K-J-1/10
R3578	**ERJ6GEYJ333**	**RES,M 33K-J-1/10**
R3579	ERJ6GEYJ123	RES,M 12K-J-1/10
R3580	**ERJ6GEYJ222**	**RES,M 2.2K-J-1/10**
R3581	ERJ6GEYJ102	RES,M 1K-J-1/10
R3582	**ERJ6GEYJ222**	**RES,M 2.2K-J-1/10**
R3583	ERJ6GEYJ102	RES,M 1K-J-1/10
R3584	**ERJ6GEYJ471**	**RES,M 470-J-1/10**
R3585	ERJ6GEYJ152	RES,M 1.5K-J-1/10
R3586	**ERJ6GEYJ123**	**RES,M 12K-J-1/10**
R3587	ERJ6GEYJ822	RES,M 8.2K-J-1/10
R3588	**ERJ6GEYJ681**	**RES,M 680-J-1/10**

REF NO.	PART NO.	DESCRIPTION
R3593	ERJ6GEYJ102	RES,M 1K-J-1/10
R3594	**ERJ6GEYJ562**	**RES,M 5.6K-J-1/10**
R3595	ERJ6GEYJ471	RES,M 470-J-1/10
R3596	**ERJ6GEYJ153**	**RES,M 15K-J-1/10**
R3597	ERJ6GEYJ103	RES,M 10K-J-1/10
R4109	**ERJ6GEYJ223**	**RES,M 22K-J-1/10**
R4110	ERJ6GEYJ223	RES,M 22K-J-1/10
R4111	**ERJ6GEYJ223**	**RES,M 22K-J-1/10**
R4114	ERJ6GEYJ332	RES,M 3.3K-J-1/10
R4115	**ERJ6GEYJ332**	**RES,M 3.3K-J-1/10**
R4116	ERJ6GEYJ332	RES,M 3.3K-J-1/10
R4117	**ERJ6GEYJ223**	**RES,M 22K-J-1/10**
R4118	ERJ6GEYJ223	RES,M 22K-J-1/10
R4119	**ERJ6GEYJ101**	**RES,M 100-J-1/10**
R4120	ERJ6GEYJ102	RES,M 1K-J-1/10
R4121	**ERJ6GEYJ472**	**RES,M 4.7K-J-1/10**
R4122	ERJ6GEYJ473	RES,M 47K-J-1/10
R4124	**ERJ6GEYJ223**	**RES,M 22K-J-1/10**
R4125	ERJ6GEYJ223	RES,M 22K-J-1/10
R4126	**ERJ6GEYJ223**	**RES,M 22K-J-1/10**
R4127	ERJ6GEYJ223	RES,M 22K-J-1/10
R4131	**ERJ6GEYJ471**	**RES,M 470-J-1/10**
R4132	ERJ6GEYJ152	RES,M 1.5K-J-1/10
R4133	**ERJ6GEYJ221**	**RES,M 220-J-1/10**
R4134	ERJ6GEYJ301	RES,M 300-J-1/10
R4135	**ERJ6ENF1801**	**RES,M 1.8K-F-1/10W**
R4136	ERJ6GEYJ680	RES,M 68-J-1/10
R4138	**ERJ6GEYJ122**	**RES,M 1.2K-J-1/10**
R4139	ERJ6GEYJ472	RES,M 4.7K-J-1/10
R4140	**ERJ6GEYJ472**	**RES,M 4.7K-J-1/10**
R4141	ERJ6GEYJ471	RES,M 470-J-1/10
R4142	**ERJ6GEYJ152**	**RES,M 1.5K-J-1/10**
R4143	ERJ6GEYJ221	RES,M 220-J-1/10
R4144	**ERJ6GEYJ301**	**RES,M 300-J-1/10**
R4145	ERJ6GEYJ122	RES,M 1.2K-J-1/10
R4146	**ERJ6GEYJ680**	**RES,M 68-J-1/10**
R4151	ERJ6GEYJ471	RES,M 470-J-1/10
R4152	**ERJ6GEYJ152**	**RES,M 1.5K-J-1/10**
R4153	ERJ6GEYJ221	RES,M 220-J-1/10
R4154	**ERJ6GEYJ391**	**RES,M 390-J-1/10**
R4155	ERJ6GEYJ122	RES,M 1.2K-J-1/10
R4156	**ERJ6GEYJ680**	**RES,M 68-J-1/10**
R4158	ERJ6GEYJ101	RES,M 100-J-1/10
R4162	**ERJ6GEYJ101**	**RES,M 100-J-1/10**
R4165	ERJ6GEYJ221	RES,M 220-J-1/10
R4166	**ERJ6GEYJ222**	**RES,M 2.2K-J-1/10**
R4167	ERJ6GEYJ472	RES,M 4.7K-J-1/10
R4168	**ERJ6GEYJ151**	**RES,M 150-J-1/10**
R4170	ERJ6ENF1201	RES,M 1.2K-F-1/10
R4195	**ERJ6GEYJ151**	**RES,M 150-J-1/10**
R4218	ERJ6GEYJ301	RES,M 300-J-1/10

REPLACEMENT PARTS LIST

Models: PT-51G44A/CA, PT-51G54A/CA & PT-61G54A/CA

Important Safety Notice: Components printed in **BOLD TYPE** have special characteristics important for safety. When replacing any of these components use only manufacturer's specified parts.

REF NO.	PART NO.	DESCRIPTION
R4244	**ERJ6GEYJ151**	**RES,M 150-J-1/10**
R4246	ERJ6GEYJ151	RES,M 150-J-1/10
R4250	**ERJ6GEYJ563**	**RES,M 56K-J-1/10**
R4251	ERJ6GEYJ102	RES,M 1K-J-1/10
R4253	**ERJ6GEYJ682**	**RES,M 6.8K-J-1/10**
R4301	ERJ6GEYJ101	RES,M 100-J-1/10
R4308	**ERJ6GEYJ104**	**RES,M 100K-J-1/10**
R4309	ERJ6GEYJ103	RES,M 10K-J-1/10
R4326	**ERJ6GEYJ471**	**RES,M 470-J-1/10**
R4327	ERJ6GEYJ102	RES,M 1K-J-1/10
R4328	**ERJ6GEYJ560**	**RES,M 56-J-1/10**
R4329	ERJ6GEYJ222	RES,M 2.2K-J-1/10
R4330	**ERJ6GEYJ561**	**RES,M 560-J-1/10**
R4331	ERJ6GEYJ471	RES,M 470-J-1/10
R4332	**ERJ6GEYJ393**	**RES,M 39K-J-1/10**
R4333	ERJ6GEYJ334	RES,M 330K-J-1/10
R4334	**ERJ6GEYJ152**	**RES,M 1.5K-J-1/10**
R4336	ERJ6GEYJ680	RES,M 68-J-1/10
R4337	**ERJ6GEYJ222**	**RES,M 2.2K-J-1/10**
R4338	ERJ6GEYJ222	RES,M 2.2K-J-1/10
R4339	**ERJ6GEYJ102**	**RES,M 1K-J-1/10**
R4340	ERJ6GEYJ223	RES,M 22K-J-1/10
R4342	**ERJ6GEYJ223**	**RES,M 22K-J-1/10**
R4343	ERJ6GEYJ101	RES,M 100-J-1/10
R4344	**ERJ6GEYJ682**	**RES,M 6.8K-J-1/10**
R4345	ERJ6GEYJ103	RES,M 10K-J-1/10
R6501	**ERJ6GEYJ272**	**RES,M 2.7K-J-1/10**
R6502	ERJ6GEYJ221	RES,M 220-J-1/10
R6503	**ERJ6GEYJ102**	**RES,M 1K-J-1/10**
R6504	ERJ6GEYJ471	RES,M 470-J-1/10
R6505	**ERJ6GEYJ122**	**RES,M 1.2K-J-1/10**
R6506	ERJ6GEYJ471	RES,M 470-J-1/10
R6509	**ERJ6GEYJ123**	**RES,M 12K-J-1/10**
R6511	ERJ6GEYJ821	RES,M 820-J-1/10
R6512	**ERJ6GEYJ271**	**RES,M 270-J-1/10**
R6513	ERJ6GEYJ510	RES,M 51-J-1/10
R6514	**ERJ6GEYJ101**	**RES,M 100-J-1/10**
R6515	ERJ6GEYJ433	RES,M 43K-J-1/10
R6516	**ERJ6GEYJ224**	**RES,M 220K-J-1/10**
R6518	ERJ6GEYJ123	RES,M 12K-J-1/10
R6519	**ERJ6GEYJ103**	**RES,M 10K-J-1/10**
R6520	ERJ6GEYJ272	RES,M 2.7K-J-1/10
R6522	**ERJ6GEYJ102**	**RES,M 1K-J-1/10**
R6524	ERJ6GEYJ471	RES,M 470-J-1/10
R6525	**ERJ6GEYJ102**	**RES,M 1K-J-1/10**
R6526	ERJ6GEYJ471	RES,M 470-J-1/10
R6527	**ERJ6GEYJ122**	**RES,M 1.2K-J-1/10**
R6528	ERJ6GEYJ333	RES,M 33K-J-1/10
R6530	**ERJ6GEYJ473**	**RES,M 47K-J-1/10**
R6531	ERJ6GEYJ153	RES,M 15K-J-1/10
R6532	**ERJ6GEYJ821**	**RES,M 820-J-1/10**
R6533	ERJ6GEYJ102	RES,M 1K-J-1/10
R6534	**ERJ6GEYJ471**	**RES,M 470-J-1/10**
R6535	ERJ6GEYJ471	RES,M 470-J-1/10
R6536	**ERJ6GEYJ221**	**RES,M 220-J-1/10**
R6539	ERJ6GEYJ333	RES,M 33K-J-1/10
R6540	**ERJ6GEYJ103**	**RES,M 10K-J-1/10**
R6541	ERJ6GEYJ681	RES,M 680-J-1/10
R6542	**ERJ6GEYJ391**	**RES,M 390-J-1/10**
R6546	ERJ6GEYJ183	RES,M 18K-J-1/10
R6547	**ERJ6GEYJ122**	**RES,M 1.2K-J-1/10**
R6548	ERJ6GEYJ102	RES,M 1K-J-1/10
R6553	**ERJ6GEYJ333**	**RES,M 33K-J-1/10**
R6557	ERJ6GEYJ202	RES,M 2K-J-1/10
R6559	**ERJ6GEYJ151**	**RES,M 150-J-1/10**
R6560	ERJ6GEYJ471	RES,M 470-J-1/10
R6561	**ERJ6GEYJ272**	**RES,M 2.7K-J-1/10**
R6562	ERJ6GEYJ221	RES,M 220-J-1/10
R6563	**ERJ6GEYJ102**	**RES,M 1K-J-1/10**
R6564	ERJ6GEYJ102	RES,M 1K-J-1/10
R6565	**ERJ6GEYJ102**	**RES,M 1K-J-1/10**
R6566	ERJ6GEYJ471	RES,M 470-J-1/10
R7007	**ERJ6GEYJ273**	**RES,M 27K-J-1/10**
R7008	ERJ6GEYJ273	RES,M 27K-J-1/10
R7009	**ERJ6GEYJ472**	**RES,M 4.7K-J-1/10**
R7010	ERJ6GEYJ472	RES,M 4.7K-J-1/10
R7011	**ERJ6GEYJ332**	**RES,M 3.3K-J-1/10**
R7012	ERJ6GEYJ332	RES,M 3.3K-J-1/10
R7013	**ERJ6GEYJ332**	**RES,M 3.3K-J-1/10**
R7014	ERJ6GEYJ332	RES,M 3.3K-J-1/10
R7015	**ERJ6GEYJ332**	**RES,M 3.3K-J-1/10**
R7016	ERJ6GEYJ332	RES,M 3.3K-J-1/10
R7018	**ERJ6GEYJ562**	**RES,M 5.6K-J-1/10**
R7019	ERJ6GEYJ102	RES,M 1K-J-1/10
R7020	**ERJ6GEYJ562**	**RES,M 5.6K-J-1/10**
R7021	ERJ6GEYJ102	RES,M 1K-J-1/10
R7022	**ERJ6GEYJ562**	**RES,M 5.6K-J-1/10**
R7023	ERJ6GEYJ102	RES,M 1K-J-1/10
R7025	**ERX2SJ5R6**	**RES,M 5.6-J-2W**
R7030	ERX2SJ3R3	RES,M 3.3-J-2W
R7035	**ERX2SJ5R6**	**RES,M 5.6-J-2W**
R7040	ERX2SJ3R3	RES,M 3.3-J-2W
R7045	**ERX2SJ5R6**	**RES,M 5.6-J-2W**
R7050	ERX2SJ3R3	RES,M 3.3-J-2W
R7051	**ERDS1TJ271**	**RES,C 270-J-1/2**
R7052	ERDS1TJ271	RES,C 270-J-1/2
R7053	**ERDS1TJ271**	**RES,C 270-J-1/2**
R7054	ERDS1TJ271	RES,C 270-J-1/2
R7055	**ERDS1TJ271**	**RES,C 270-J-1/2**
R7056	ERDS1TJ271	RES,C 270-J-1/2
R7061	**ERJ6GEYJ152**	**RES,M 1.5K-J-1/10**
R7062	ERJ6GEYJ471	RES,M 470-J-1/10

REPLACEMENT PARTS LIST

Models: PT-51G44A/CA, PT-51G54A/CA & PT-61G54A/CA

Important Safety Notice: Components printed in **BOLD TYPE** have special characteristics important for safety. When replacing any of these components use only manufacturer's specified parts.

REF NO.	PART NO.	DESCRIPTION
R7107	**ERJ6GEYJ331**	**RES,M 330-J-1/10**
R7108	ERJ6GEYJ331	RES,M 330-J-1/10
R7109	**ERJ6GEYJ331**	**RES,M 330-J-1/10**
R7112	ERJ6GEYJ331	RES,M 330-J-1/10
R7113	**ERJ6GEYJ331**	**RES,M 330-J-1/10**
R7116	ERJ6GEYJ331	RES,M 330-J-1/10
R7117	**ERJ6GEYJ221**	**RES,M 220-J-1/10**
R7118	ERJ6GEYJ101	RES,M 100-J-1/10
R7119	**ERJ6GEYJ101**	**RES,M 100-J-1/10**
R7120	ERJ6GEYJ331	RES,M 330-J-1/10
R7127	**ERJ6GEYJ103**	**RES,M 10K-J-1/10**
R7130	ERJ6GEYJ103	RES,M 10K-J-1/10
R7131	**ERJ6GEYJ103**	**RES,M 10K-J-1/10**
R7132	ERJ6GEYJ103	RES,M 10K-J-1/10
R7133	**ERJ6GEYJ684**	**RES,M 680K-J-1/10**
R7136	ERJ6GEYJ103	RES,M 10K-J-1/10
R7139	**ERJ6GEYJ103**	**RES,M 10K-J-1/10**
R7140	ERJ6GEYJ221	RES,M 220-J-1/10
R7142	**ERJ6GEYJ103**	**RES,M 10K-J-1/10**
R7143	ERJ6GEYJ392	RES,M 3.9K-J-1/10
R7148	**ERJ6GEYJ103**	**RES,M 10K-J-1/10**
R7149	ERJ6GEYJ103	RES,M 10K-J-1/10
R7150	**ERJ6GEYJ272**	**RES,M 2.7K-J-1/10**
R7151	ERJ6GEYJ682	RES,M 6.8K-J-1/10
R7152	**ERJ6GEYJ103**	**RES,M 10K-J-1/10**
R7153	ERJ6GEYJ103	RES,M 10K-J-1/10
R7154	**ERJ6GEYJ103**	**RES,M 10K-J-1/10**
R7155	ERJ6GEYJ103	RES,M 10K-J-1/10
R7156	**ERJ6GEYJ103**	**RES,M 10K-J-1/10**
R7157	ERJ6GEYJ103	RES,M 10K-J-1/10
R7158	**ERJ6GEYJ103**	**RES,M 10K-J-1/10**
R7159	ERJ6GEYJ103	RES,M 10K-J-1/10
R7160	**ERJ6GEYJ103**	**RES,M 10K-J-1/10**
R7161	ERJ6GEYJ103	RES,M 10K-J-1/10
R7162	**ERJ6GEYJ103**	**RES,M 10K-J-1/10**
R7163	ERJ6GEYJ103	RES,M 10K-J-1/10
R7164	**ERJ6GEYJ103**	**RES,M 10K-J-1/10**
R7165	ERJ6GEYJ103	RES,M 10K-J-1/10
R7166	**ERJ6GEYJ103**	**RES,M 10K-J-1/10**
R7169	ERJ6GEYJ102	RES,M 1K-J-1/10
R7172	**ERJ6GEYJ103**	**RES,M 10K-J-1/10**
R7173	ERJ6GEYJ103	RES,M 10K-J-1/10
R7175	**ERJ6GEYJ103**	**RES,M 10K-J-1/10**
R7177	ERJ6GEYJ103	RES,M 10K-J-1/10
R7180	**ERJ6GEYJ153**	**RES,M 15K-J-1/10**
R7181	ERJ6GEYJ153	RES,M 15K-J-1/10
R7184	**ERJ6GEYJ103**	**RES,M 10K-J-1/10**
R7186	ERJ6GEYJ103	RES,M 10K-J-1/10
R7188	**ERJ6GEYJ103**	**RES,M 10K-J-1/10**
R7189	ERJ6GEYJ103	RES,M 10K-J-1/10
R7190	**ERJ6GEYJ103**	**RES,M 10K-J-1/10**
R7191	ERJ6GEYJ103	RES,M 10K-J-1/10
R7192	**ERJ6GEYJ103**	**RES,M 10K-J-1/10**
R7193	ERJ6GEYJ103	RES,M 10K-J-1/10
R7194	**ERJ6GEYJ473**	**RES,M 47K-J-1/10**
R7195	ERJ6GEYJ103	RES,M 10K-J-1/10
R7196	**ERJ6GEYJ103**	**RES,M 10K-J-1/10**
R7197	ERJ6GEYJ103	RES,M 10K-J-1/10
R7198	**ERJ6GEYJ103**	**RES,M 10K-J-1/10**
R7201	ERJ6GEYJ103	RES,M 10K-J-1/10
R7204	**ERJ6GEYJ103**	**RES,M 10K-J-1/10**
R7205	ERJ6GEYJ103	RES,M 10K-J-1/10
R7207	**ERJ6GEYJ103**	**RES,M 10K-J-1/10**
R7208	ERJ6GEYJ103	RES,M 10K-J-1/10
R7211	**ERJ6GEYJ103**	**RES,M 10K-J-1/10**
R7212	ERJ6GEYJ103	RES,M 10K-J-1/10
R7213	**ERJ6GEYJ103**	**RES,M 10K-J-1/10**
R7215	ERJ6GEYJ103	RES,M 10K-J-1/10
R7216	**ERJ6GEYJ103**	**RES,M 10K-J-1/10**
R7217	ERJ6GEYJ103	RES,M 10K-J-1/10
R7218	**ERJ6GEYJ103**	**RES,M 10K-J-1/10**
R7219	ERJ6GEYJ103	RES,M 10K-J-1/10
R7220	**ERJ6GEYJ103**	**RES,M 10K-J-1/10**
R7221	ERJ6GEYJ103	RES,M 10K-J-1/10
R7222	**ERJ6GEYJ102**	**RES,M 1K-J-1/10**
R7223	ERJ6GEYJ103	RES,M 10K-J-1/10
R7224	**ERJ6GEYJ103**	**RES,M 10K-J-1/10**
R7225	ERJ6GEYJ103	RES,M 10K-J-1/10
R7226	**ERJ6GEYJ222**	**RES,M 2.2K-J-1/10**
R7227	ERJ6GEYJ102	RES,M 1K-J-1/10
R7228	**ERJ6GEYJ103**	**RES,M 10K-J-1/10**
R7229	ERJ6GEYJ103	RES,M 10K-J-1/10
R7230	**ERJ6GEYJ103**	**RES,M 10K-J-1/10**
R7231	ERJ6GEYJ222	RES,M 2.2K-J-1/10
R7232	**ERJ6GEYJ103**	**RES,M 10K-J-1/10**
R7233	ERJ6GEYJ102	RES,M 1K-J-1/10
R7234	**ERJ6GEYJ103**	**RES,M 10K-J-1/10**
R7235	ERJ6GEYJ103	RES,M 10K-J-1/10
R7236	**ERJ6GEYJ222**	**RES,M 2.2K-J-1/10**
R7237	ERJ6GEYJ103	RES,M 10K-J-1/10
R7238	**ERJ6GEYJ103**	**RES,M 10K-J-1/10**
R7239	ERJ6GEYJ103	RES,M 10K-J-1/10
R7240	**ERJ6GEYJ103**	**RES,M 10K-J-1/10**
R7241	ERJ6GEYJ332	RES,M 3.3K-J-1/10
R7242	**ERJ6GEYJ103**	**RES,M 10K-J-1/10**
R7243	ERJ6GEYJ103	RES,M 10K-J-1/10
R7244	**ERJ6GEYJ103**	**RES,M 10K-J-1/10**
R7245	ERJ6GEYJ103	RES,M 10K-J-1/10
R7247	**ERJ6GEYJ221**	**RES,M 220-J-1/10**
R7248	ERJ6GEYJ221	RES,M 220-J-1/10
R7249	**ERJ6GEYJ221**	**RES,M 220-J-1/10**
R7250	ERJ6GEYJ221	RES,M 220-J-1/10

REPLACEMENT PARTS LIST

Models: PT-51G44A/CA, PT-51G54A/CA & PT-61G54A/CA

Important Safety Notice: Components printed in **BOLD TYPE** have special characteristics important for safety. When replacing any of these components use only manufacturer's specified parts.

REF NO.	PART NO.	DESCRIPTION
R7251	ERJ6GEYJ391	RES,M 390-J-1/10
R7252	ERJ6GEYJ103	RES,M 10K-J-1/10
R7253	ERJ6GEYJ223	RES,M 22K-J-1/10
R7254	ERJ6GEYJ223	RES,M 22K-J-1/10
R7255	ERJ6GEYJ103	RES,M 10K-J-1/10
R7256	ERJ6GEYJ223	RES,M 22K-J-1/10
R7257	ERJ6GEYJ223	RES,M 22K-J-1/10
R7258	ERJ6GEYJ103	RES,M 10K-J-1/10
R7259	ERJ6GEYJ103	RES,M 10K-J-1/10
R7260	ERJ6GEYJ103	RES,M 10K-J-1/10
R7261	ERJ6GEYJ103	RES,M 10K-J-1/10
R7262	ERJ6GEYJ223	RES,M 22K-J-1/10
R7263	ERJ6GEYJ223	RES,M 22K-J-1/10
R7264	ERJ6GEYJ104	RES,M 100K-J-1/10
R7265	ERJ6GEYJ104	RES,M 100K-J-1/10
R7266	ERJ6GEYJ104	RES,M 100K-J-1/10
R7267	ERJ6GEYJ104	RES,M 100K-J-1/10
R7268	ERJ6GEYJ104	RES,M 100K-J-1/10
R7269	ERJ6GEYJ104	RES,M 100K-J-1/10
R7270	ERJ6ENF2702	RES,M 27K-F-1/10
R7272	ERJ6ENF2702	RES,M 27K-F-1/10
R7273	ERJ6ENF2702	RES,M 27K-F-1/10
R7276	ERJ6ENF3902	RES,M 39K-F-1/10
R7277	ERJ6ENF3902	RES,M 39K-F-1/10
R7278	ERJ6ENF3902	RES,M 39K-F-1/10
R7280	ERJ6GEYJ103	RES,M 10K-J-1/10
R7281	ERJ6GEYJ103	RES,M 10K-J-1/10
R7282	ERJ6GEYJ103	RES,M 10K-J-1/10
R7283	ERJ6ENF4702	RES,M 47K-F-1/10
R7284	ERJ6ENF4702	RES,M 47K-F-1/10
R7285	ERJ6ENF4702	RES,M 47K-F-1/10
R7290	ERJ6ENF4702	RES.M 47K-F-1/10
R7292	ERJ6ENF4702	RES,M 47K-F-1/10
R7294	ERJ6ENF4702	RES.M 47K-F-1/10
R7295	ERJ6GEYJ103	RES,M 10K-J-1/10
R7296	ERJ6GEYJ103	RES.M 10K-J-1/10
R7297	ERJ6GEYJ103	RES,M 10K-J-1/10
R7298	ERJ6ENF1001	RES.M 1K-F-1/10
R7299	ERJ6ENF3902	RES,M 39K-F-1/10
R7300	ERJ6ENF3902	RES.M 39K-F-1/10
R7301	ERJ6ENF3902	RES,M 39K-F-1/10
R7304	ERJ6ENF2702	RES.M 27K-F-1/10
R7305	ERJ6ENF2702	RES,M 27K-F-1/10
R7306	ERJ6ENF2702	RES.M 27K-F-1/10
R7308	ERJ6ENF1001	RES,M 1K-F-1/10
R7309	ERJ6ENF1001	RES,M 1K-F-1/10
R7310	ERJ6ENF1001	RES,M 1K-F-1/10
R7311	ERJ6ENF1001	RES,M 1K-F-1/10
R7312	ERJ6ENF1001	RES,M 1K-F-1/10
R7319	ERJ6GEYJ221	RES,M 220-J-1/10
R7320	ERJ6GEYJ221	RES,M 220-J-1/10

	PART NO.	DESCRIPTION
R7321	ERJ6GEYJ221	RES,M 220-J-1/10
R7322	ERJ6GEYJ221	RES,M 220-J-1/10
R7326	ERJ6GEYJ103	RES,M 10K-J-1/10
R7340	ERJ6GEYJ105	RES,M 1.0MEG-J-1/10
R7341	ERJ6GEYJ102	RES,M 1K-J-1/10
R7345	ERJ6GEYJ221	RES,M 220-J-1/10
R7346	ERJ6GEYJ221	RES,M 220-J-1/10
R7347	ERJ6GEYJ471	RES,M 470-J-1/10
R7348	ERJ6GEYJ102	RES,M 1K-J-1/10
R7349	ERJ6GEYJ103	RES,M 10K-J-1/10
R7350	ERJ6GEYJ103	RES,M 10K-J-1/10
R7352	ERJ6GEYJ102	RES,M 1K-J-1/10
R7353	ERJ6GEYJ122	RES,M 1.2K-J-1/10
	SWITCHES	
S010	EVQQVC13T	SWITCH
[illegible]	EVQQVC13T	SWITCH
S012	EVQQVC13T	SWITCH
[illegible]	EVQQVC13T	SWITCH
S014	EVQQVC13T	SWITCH
[illegible]	EVQQVC13T	SWITCH
S016	EVQQVC13T	SWITCH
	TRANSFORMERS	
T501	ETH19Y70AYM	TRANSFORMER, HORIZONTAL DRIVER
[illegible]	KFT7AQ051F	TRANSFORMER, FLYBACK
T802	ETS42AD365AC	TRANSFORMER
[illegible]	TLP16297	TRANSFORMER, POWER SUPPLY
	CRYSTALS/FILTERS	
[illegible]	TSS2080MX	CRYSTAL, 12 MHZ CLOCK
X101	M1969M	SAW FILTER
X102	EFCWS4504AB	FILTER 4.5MHZ
X201	SFSH4R5MDB	CRYSTAL
X501	TAFCSB503F38	CRYSTAL, CLOCK
X601	TSS2AA001	CRYSTAL, 3.58MHZ
X1801	TSSA050	CRYSTAL OSCILLATOR
X2102	EFCWS4504AB	FILTER 4.5MHZ
X2103	EFCKM1958M	CERAMIC FILTER
X7101	EF0EC4004T4	CRYSTAL
	OTHERS	
M001	EASG12P525A2	SPEAKER
M002	ENPE625A	ANT SPLITTER (2 TUNER)
TNR001	ENV56D19G3	TUNER
TNR002	ENV56D19G3	TUNER
RM002	RPM-637CBRL	IR RECEIVER, REMOTE CONTROL
M003	EUR511110	REMOTE CONTROL *PT-51G44A/CA*
M004	EUR511171B	REMOTE CONTROL *PT-51G54A/CA PT-51G64A/CA*
M005	UR51EC883A	BATT. COVER, REMOTE CONTROL *PT-51G44A/CA*
M006	UR51EC892A	BATT. COVER, REMOTE CONTROL *PT-51G54A/CA PT-5164A/CA*
DY	KDY2AS631F	YOKE, DEFLECTION

REPLACEMENT PARTS LIST

Models: PT-51G44A/CA, PT-51G54A/CA & PT-61G54A/CA

Important Safety Notice: Components printed in **BOLD TYPE** have special characteristics important for safety. When replacing any of these components use only manufacturer's specified parts.

REF NO.	PART NO.	DESCRIPTION
M007	TBL2AH30031	CASTER
M008	TBL2A3106	CASTER
M009	TBM2AA0011	BADGE, PANASONIC
M010	TBX2A50191G	ASSY, 7 PUSHBUTTON
M011	TESA024	SPRING
M012	TES6183	RETAINER V OUT IC
M013	**TJS1A5160**	**CRT SOCKET**
M014	TKB2AA0101M	CABINET WOOD *PT-51G44A/CA PT-51G54A/CA*
M015	TKB2AA0111M	CABINET WOOD *PT-61G54A/CA*
M016	TKD2AX0171	BARRIER PANEL *PT-51G44A/CA PT-51G54A/CA*
M017	TXJTU108RC	ASSY CABLE
M018	TKGF5005	LENS, PTV
M019	TKG2AA50051	MIRROR GLASS *PT-51G44A/CA PT-51G54A/CA*
M020	TKG2AA50061	MIRROR GLASS *PT-61G54A/CA*
M021	TKG2AH50201	SCREEN, LENTICULAR *PT-51G44A/CA*
M022	TKG2AH50211	SCREEN, FRESNEL *PT-51G44A/CA*
M023	TKG2AH50221	SCREEN, LENTICULAR *PT-61G54A/CA*
M024	TKG2AH50231	SCREEN, FRESNEL *PT-61G54A/CA*
M025	TKU2AA00901	BACK COVER (LOWER) *PT-51G44A/CA PT-51G54A/CA*
M026	TKU2AA01011	BACK COVER (UPPER) *PT-51G44A/CA PT-51G54A/CA*
M027	TKU2AA01101	BACK COVER (LOWER) *PT-61G54A/CA*

REF NO.	PART NO.	DESCRIPTION
M028	TKU2AA01201	BACK COVER (UPPER) *PT-61G54A/CA*
M029	TNX2A1001	FOCUS BLOCK
M030	TQB2AA0304	MANUAL, OWNERS *PT-51G44A*
M031	TQB2AA0305	MANUAL, OWNERS *PT-51G44CA*
M032	TQB2AA0306	MANUAL, OWNERS *PT-51G54A PT-61G54A*
M033	TQB2AA0307	MANUAL, OWNERS *PT-51G54CA PT-61G54CA*
M034	TQB2AA7034	V-CHIP INSTRUCTIONS
M035	TQB2AA7038	REMOTE GUIDE *PT-51G54A/CA PT-61G54A/CA*
M036	TQB2AA7045	REMOTE GUIDE *PT-51G44A/CA*
M037	**TSX2AA0131**	**LINE CORD**
M038	TXFKG0198SER	ASSY, SCREEN FRAME *PT-51G44A/CA PT-51G54A/CA*
M039	TXFKG0298SER	ASSY, SCREEN FRAME *PT-61G54A/CA*
M040	TXFKP01CAZM	ASSY, SPEAKER GRILLE *PT-51G44A/CA PT-51G54A/CA*
M041	TXFKP017WFM	ASSY, SPEAKER GRILLE *PT-61G54A/CA*
M042	**TXFCRT70SER**	**ASSY, CRT (BLUE)**
M043	**TXFCRT71SER**	**ASSY, CRT (GREEN)**
M044	**TXFCRT72SER**	**ASSY, CRT (RED)**
M045	TXF3A01AAZ	ASSY DAG GND
JK3001	TJB2A10021	TERMINAL BACK A/V

DESCRIPTION OF ABBREVIATIONS GUIDE

RESISTOR	
Carbon	+/- 1%
Fuse	+/- 5%
Metal Oxide	+/- 10%
Solid	+/- 20%
Wire Wound	+/- 2%

RES, C 270-J-1/4

CAPACITOR	
Ceramic	+/- 0.25pF
Electrolytic	+/- 0.5pF
Polyester	+/- 1pF
Styrol	+/- 5%
Tantalum	+/- 10%
	+/- 15%
	+/- 20%
	+10% -0%
	+80% -20%

CAP, P .068UF-K-50V

SERVICEMAN MODE (ELECTRONIC CONTROL)
SERVICE ADJUSTMENT VALUES

Model _____ Ser #_____ Date_____

Note: Record the original settings PRIOR to modifying the registers.

Mode	Service Adjustment	Adjustment Range	Def. Val.	Original Value	New Value
Sub Adjustments					
B0	SUB-COLOR	0 ~ 63	27		
B1	SUB-TINT	0 ~ 63	50		
B2	SUB-BRIGHTNESS	0 ~ 255	50		
B3	SUB-PICTURE	0 ~ 63	25		
B4	KILLER/ABL/ GAMMA	0 ~ 7	5		
B5	VIDEO ADJUSTMENT	0 ~ 15	8		
B6	AUDIO ADJUSTMENT	0 ~ 31	23		
Cut-Off Adjustments					
C0	CUT-OFF R	0 ~ 1 0 ~ 255	0 150		
C1	CUT-OFF G	0 ~ 255	764		
C2	CUT-OFF B	0 ~ 1 0 ~ 255	0 78		
C3	DRIVE R	0 ~ 255	32		
C4	DRIVE B	0 ~ 255	43		
C5	YNR SWITCH	0 ~ 1	0		
C6	AFT	0 ~ 1 0 ~ 128	0 122		
C7	RF-AGC	0 ~ 255	64		
C8	YNR VIDEO ADJUSTMENT	0 ~ 7	0		
C9	HORIZONTAL CENTER	0 ~ 31	14		
Ca	BEAM LIMIT	0 ~ 7	5		
Cb	VCJ TEST H	0 ~ 2	0		
Cc	B.P.F. SWITCH	0 ~ 1	1		
MTS Adjustments					
M0	INPUT LEVEL	0 ~ 63	35		
M1	STEREO PLL/VCO	0 ~ 63	34		
M2	FILTER	0 ~63	25		
M3	LOW-LEVEL SEPARATION	0 ~ 63	37		
M4	HIGH-LEVEL SEPARATION	0 ~ 63	23		

Mode	Service Adjustment	Adjustment Range	Def. Val.	Original Value	New Value
Options Adjustments					
S0	PIP COLOR	0 ~ 127	125		
S1	PIP CONTRAST	0 ~ 127	37		
S2	UP 1/9	0 ~ 255	25		
S3	DOWN 1/9	0 ~ 255	149		
S4	LEFT 1/9	0 ~ 255	7		
S5	RIGH 1/9	0 ~ 255	107		
S6	UP 1/16	0 ~ 255	25		
S7	DOWN 1/16	0 ~ 255	165		
S8	LEFT 1/16	0 ~ 255	7		
S9	RIGH 1/16	0 ~ 255	124		
Sa	FREERUN	N/A	N/A		
Sb	CLOCK ADJUSTMENT	0 ~ 255	161		
Sc	PIP TINT	0 ~ 63	50		
Sd	LOUDNESS COMPENSATION	0 ~ 63	52		
Comb Filter Adjustments					
V0	Static Dig. Conv.	TOGGLE	0		
V1	Dinamic Digital Conv.	0 ~ 99	12		
V2	BLUE GAMMA	0 ~ 255	15		
V3	VERTICAL SIZE	0 ~ 255	89		
V4	HORIZONTAL SIZE	0 ~ 255	95		
V5	SUB SHARPNESS	0 ~ 99	33		

Printed in USA
V99032620CM0507