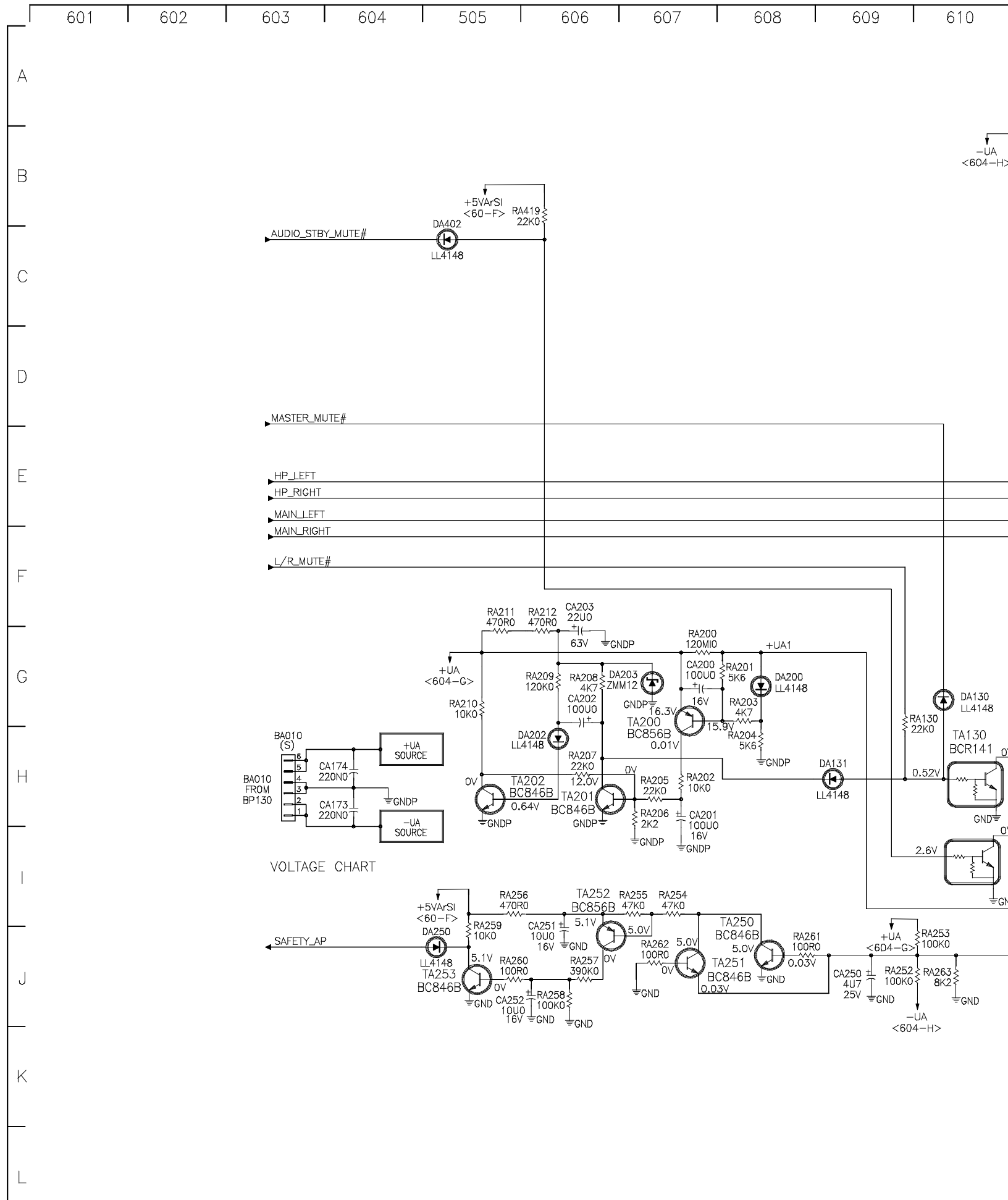

SCALE 1=1.5

12/16/03 11:11 74_SIGNAL_16

611 612 613 614 615 616 617 618 619 620

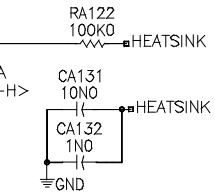

SCHEMATIC NOTES
1. RESISTANCE VALUES ARE IN OHMS; K=X1000, Meg=X1,000,000.
RESISTORS ARE 0.250W 5%, EXCEPT WHERE INDICATED.
[ ] INDICATES FLAT MAXI-CHIP COMPONENT, 1/8W EXCEPT WHERE INDICATED.
/ \ INDICATES FLAT MINI-CHIP COMPONENT, 1/16W EXCEPT WHERE INDICATED.
2. CAPACITANCE VALUES 1.0 AND ABOVE ARE IN pF, VALUES BELOW 1.0 ARE IN Fo
EXCEPT WHERE INDICATED. VOLTAGE RATING IS 50V EXCEPT WHERE INDICATED.
[ ] INDICATES FLAT MAXI-CHIP COMPONENT.
/ \ INDICATES FLAT MINI-CHIP COMPONENT.
\ / INDICATES FLAT MINI-CHIP COMPONENT.
3. ⏚ DENOTES CHASSIS GROUND. ⊗ INDICATES CONNECTION VIA POINT-TO-POINT WIRE.
⏚ DENOTES ISOLATED GROUND.
—INDICATES JUMPER WIRE.
—INDICATES ZERO OHM CHIP COMPONENT.

SERVICE NOTICE

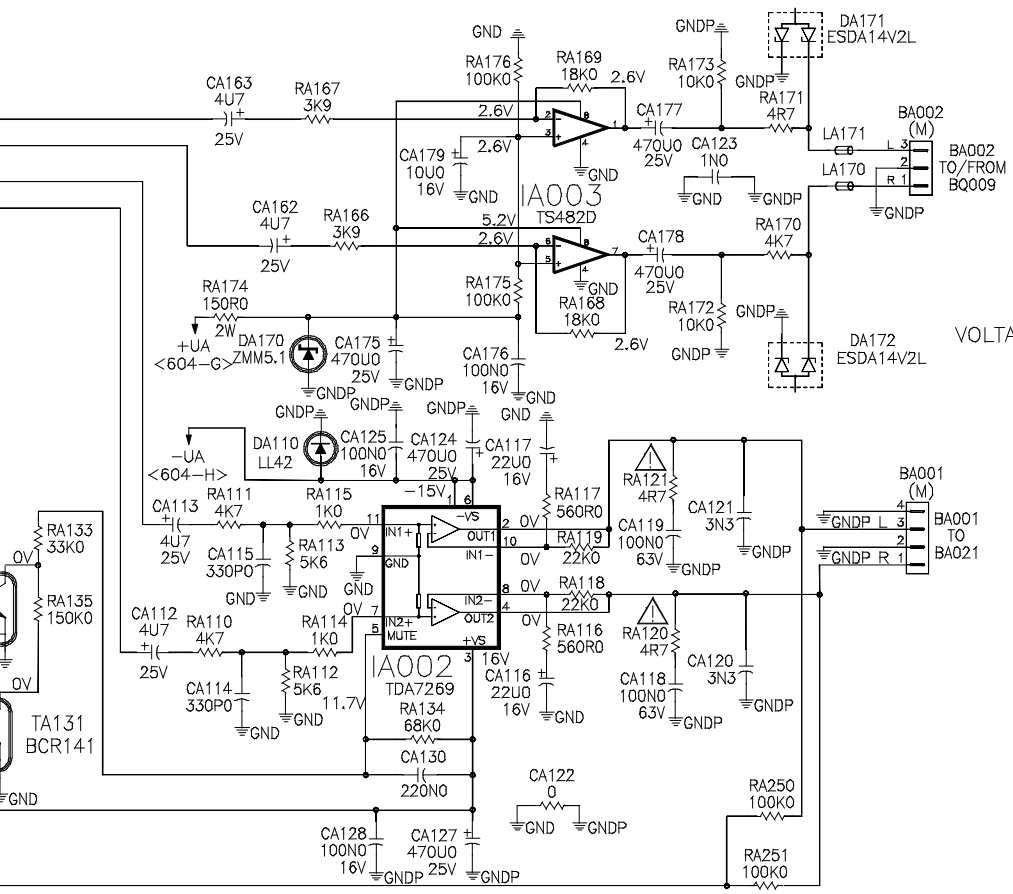

VOLTAGE CHART

ALL INTEGRATED CIRCUITS AND MANY OTHER SEMICONDUCTORS ARE ELECTROSTATICALLY SENSITIVE AND REQUIRE SPECIAL HANDLING TECHNIQUES DESCRIBED UNDER "ELECTROSTATICALLY SENSITIVE (ES) DEVICES" IN THE SAFETY AND SERVICING PRECAUTIONS PUBLICATION.

PRODUCT SAFETY NOTE

COMPONENTS WITH A ⚠ HAVE SPECIAL CHARACTERISTICS IMPORTANT TO SAFETY. BEFORE REPLACING ANY OF THESE COMPONENTS READ CAREFULLY THE PRODUCT SAFETY NOTICE IN THIS SERVICE DATA. DO NOT DEGRADE THE SAFETY OF THE SET THROUGH IMPROPER SERVICING.