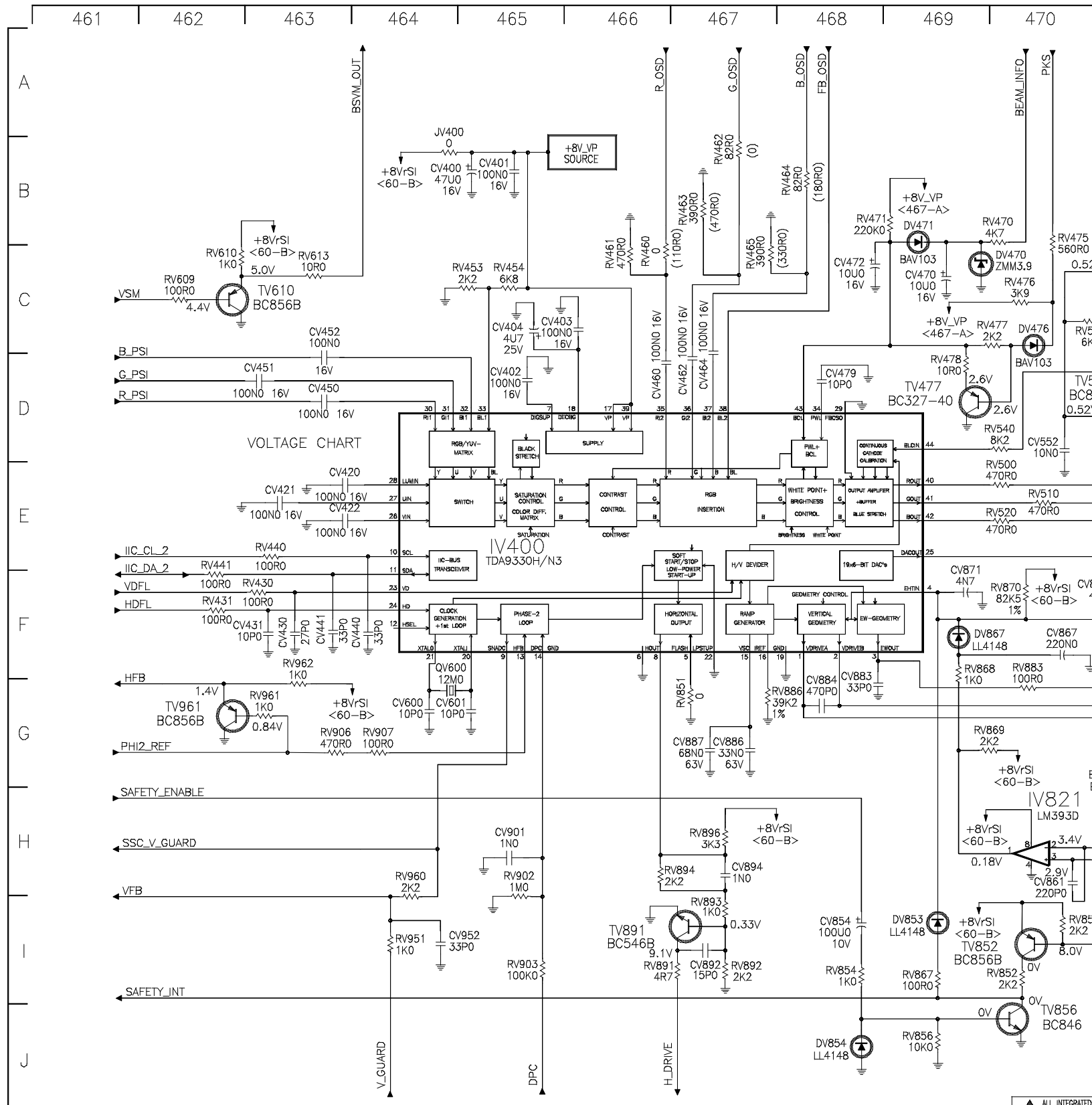

SCHEMATIC NOTES

1. RESISTANCE VALUES ARE IN OHMS; K=X1000, Meg=X1,000,000.
   RESISTORS ARE 0.250W 5%, EXCEPT WHERE INDICATED.
   [ ] INDICATES FLAT MAXI-CHIP COMPONENT, 1/8W EXCEPT WHERE INDICATED.
   / \ INDICATES FLAT MINI-CHIP COMPONENT, 1/16W EXCEPT WHERE INDICATED.
2. CAPACITANCE VALUES 1.0 AND ABOVE ARE IN pF, VALUES BELOW 1.0 ARE IN µF EXCEPT WHERE INDICATED. VOLTAGE RATING IS 50V EXCEPT WHERE INDICATED.
   [ ] INDICATES FLAT MAXI-CHIP COMPONENT.
   / \ INDICATES FLAT MINI-CHIP COMPONENT.
   \ / INDICATES FLAT MINI-CHIP COMPONENT.
3. ⏚ DENOTES CHASSIS GROUND. ⊗ INDICATES CONNECTION VIA POINT-TO-POINT WIRE.
   ⏚ DENOTES ISOLATED GROUND.
   —INDICATES JUMPER WIRE.
   —INDICATES ZERO OHM CHIP COMPONENT.

ALL INTEGRATED AND MANY OTHER DUCTORS ARE EL CALLY SENSITIVE AND SPECIAL HANDLING TE DESCRIBED UNDER "ELEC CALLY SENSITIVE (ES) DEVIC SAFETY AND SERVICING PR PUBLICATION.

PRODUCT SAFETY

COMPONENTS WITH A ⚠ CAL CHARACTERISTICS IMP SAFETY. BEFORE REPLAC THESE COMPONENTS REA THE PRODUCT SAFETY NOT SERVICE DATA. DO NOT D SAFETY OF THE SET IMPROPER SERVICING

SERVICE NOTICE

SCALE,2=.3
12/16/03 12:40 74_SIGNAL_9

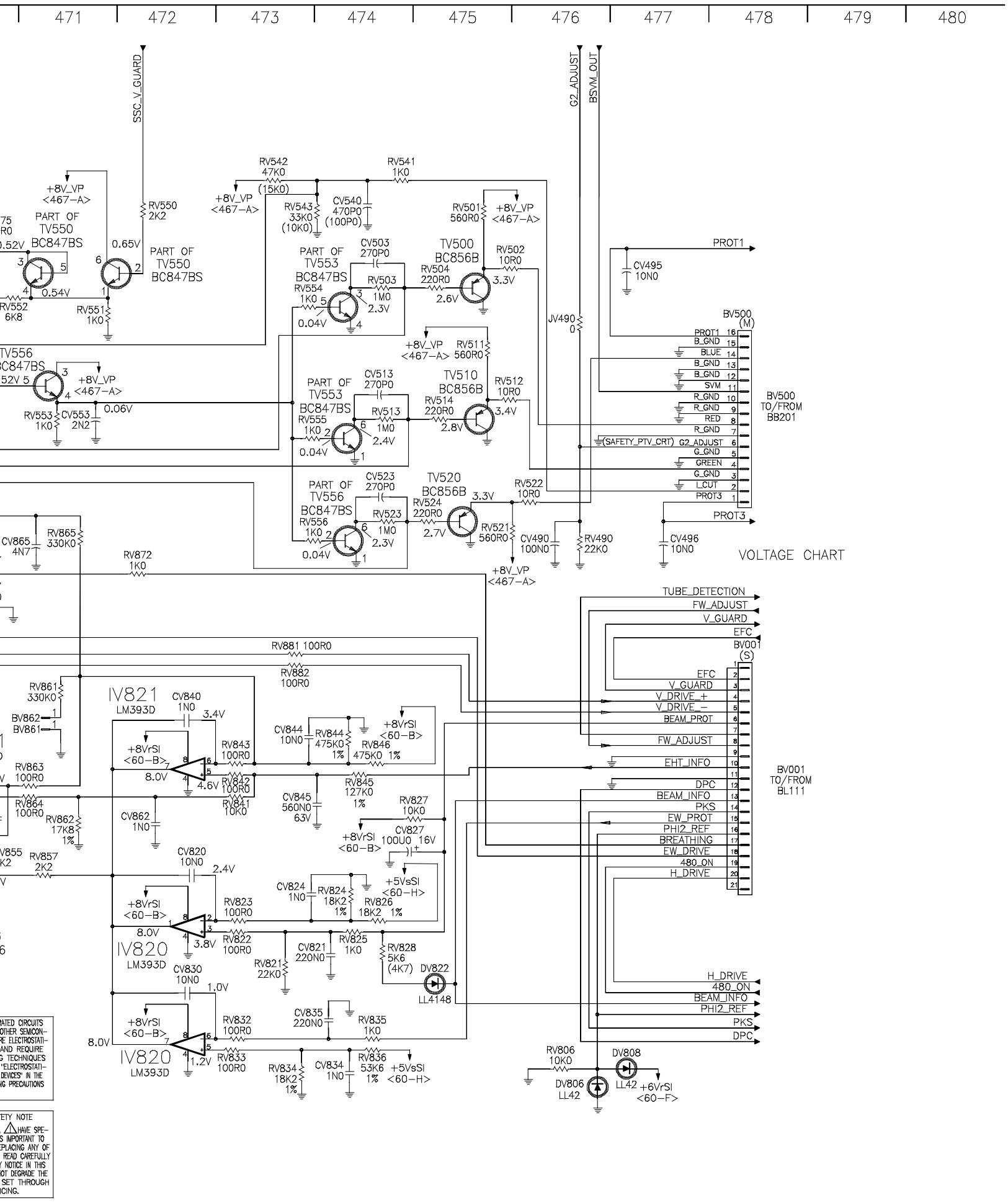
471
472
473
474
475
476
477
478
479
480
SSC_V_GUARD
G2_ADJUST
BSVM_OUT
+8V_VP <467-A>
PART OF TV550 BC847BS
RV550 2K2
RV552 6K8
RV551 1K0
0.65V
0.54V
RV542 47K0 (15K0)
RV541 1K0
RV543 33K0 (10K0)
CV540 470P0 (100P0)
RV501 560R0
PART OF TV553 BC847BS
CV503 270P0
RV503 1M0
RV554 1K0
0.04V
2.3V
TV500 BC856B
RV502 10R0
RV504 220R0
2.6V
3.3V
PROT1
CV495 10N0
JV490 0
BV500 (M)
PROT1 16
B_GND 15
BLUE 14
B_GND 13
B_GND 12
SVM 11
R_GND 10
R_GND 9
RED 8
R_GND 7
(SAFETY_PTV_CRT) G2_ADJUST 6
G_GND 5
GREEN 4
G_GND 3
LCUT 2
PROT3 1
BV500 TO/FROM BB201
TV556 BC847BS
RV553 1K0
CV553 2N2
0.06V
RV511 560R0
PART OF TV553 BC847BS
CV513 270P0
RV513 1M0
RV555 1K0
0.04V
2.4V
TV510 BC856B
RV512 10R0
RV514 220R0
2.8V
3.4V
PART OF TV556 BC847BS
CV523 270P0
RV523 1M0
RV556 1K0
0.04V
2.3V
TV520 BC856B
RV522 10R0
RV524 220R0
2.7V
3.3V
RV521 560R0
CV490 100N0
RV490 22K0
CV496 10N0
PROT3
VOLTAGE CHART
CV865 4N7
RV865 330K0
RV872 1K0
TUBE_DETECTION
FW_ADJUST
V_GUARD
EFC
BV001 (S)
RV881 100R0
RV882 100R0
RV861 330K0
BV862
BV861
IV821 LM393D
CV840 1N0
3.4V
CV844 10N0
RV844 475K0 1%
RV846 475K0 1%
+8VrSI <60-B>
RV843 100R0
RV842 100R0
RV841 10K0
8.0V
4.6V
RV863 100R0
RV864 100R0
RV862 17K8 1%
CV862 1N0
CV845 560N0 63V
RV845 127K0 1%
RV827 10K0
CV827 100U0 16V
V_GUARD
V_DRIVE_+
V_DRIVE_-
BEAM_PROT
FW_ADJUST
EHT_INFO
DPC
BEAM_INFO
PKS
EW_PROT
PHI2_REF
BREATHING
EW_DRIVE
480_ON
H_DRIVE
BV001 TO/FROM BL111
RV857 2K2
CV820 10N0
2.4V
CV824 1N0
RV824 18K2 1%
RV826 18K2 1%
+5VsSI <60-H>
RV823 100R0
RV822 100R0
3.8V
IV820 LM393D
CV821 220N0
RV825 1K0
RV828 5K6 (4K7)
DV822
LL4148
RV821 22K0
CV830 10N0
1.0V
CV835 220N0
RV835 1K0
RV832 100R0
RV833 100R0
1.2V
RV834 18K2 1%
CV834 1N0
RV836 53K6 1%
RV806 10K0
DV808
DV806 LL42
LL42
+6VrSI <60-F>
PATED CIRCUITS
OTHER SEMICON-
RE ELECTROSTATI-
AND REQUIRE
G TECHNIQUES
"ELECTROSTATI-
DEVICES" IN THE
NG PRECAUTIONS
ETY NOTE
HAVE SPE-
S IMPORTANT TO
PLACING ANY OF
READ CAREFULLY
NOTICE IN THIS
OT DEGRADE THE
SET THROUGH
CING.