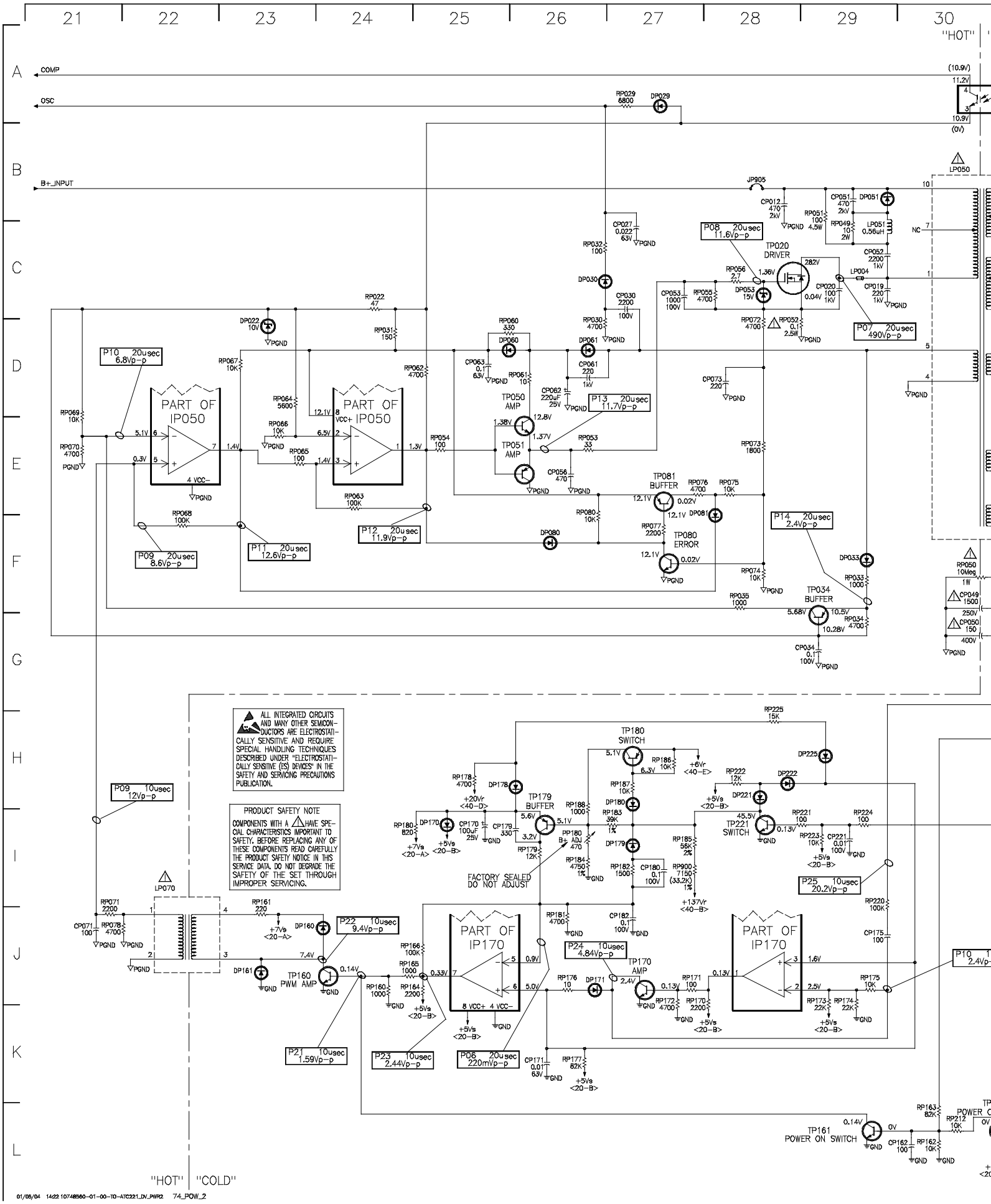

ALL INTEGRATED CIRCUITS AND MANY OTHER SEMICONDUCTORS ARE ELECTROSTATICALLY SENSITIVE AND REQUIRE SPECIAL HANDLING TECHNIQUES DESCRIBED UNDER "ELECTROSTATICALLY SENSITIVE (ES) DEVICES" IN THE SAFETY AND SERVICING PRECAUTIONS PUBLICATION.

PRODUCT SAFETY NOTE

COMPONENTS WITH A ⚠ HAVE SPECIAL CHARACTERISTICS IMPORTANT TO SAFETY. BEFORE REPLACING ANY OF THESE COMPONENTS READ CAREFULLY THE PRODUCT SAFETY NOTICE IN THIS SERVICE DATA. DO NOT DEGRADE THE SAFETY OF THE SET THROUGH IMPROPER SERVICING.

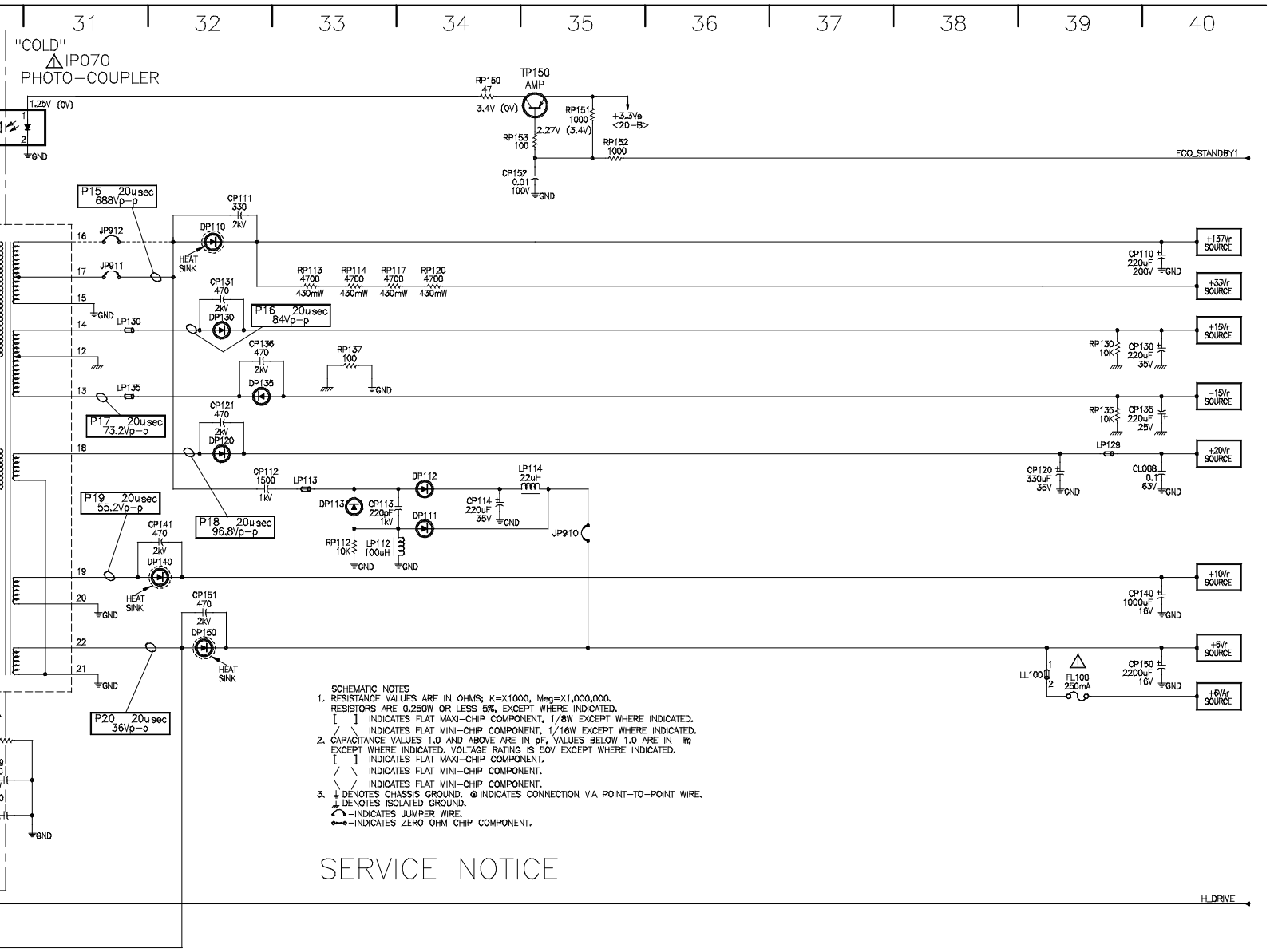
31
32
33
34
35
36
37
38
39
40
"COLD"
IP070
PHOTO-COUPLER
1.25V (0V)
TP150
AMP
RP150
47
3.4V (0V)
RP151
1000
2.27V (3.4V)
+3.3Vs
<20-B>
RP153
100
RP152
1000
CP152
0.01
100V
ECO_STANDBY1
P15 20usec
688Vp-p
CP111
330
DP110
2kV
JP912
JP911
HEAT SINK
RP113
4700
430mW
RP114
4700
430mW
RP117
4700
430mW
RP120
4700
430mW
CP131
470
2kV
DP130
P16 20usec
84Vp-p
LP130
CP136
470
2kV
DP135
RP137
100
LP135
P17 20usec
73.2Vp-p
CP121
470
2kV
DP120
CP112
1500
1kV
LP113
DP113
CP113
220pF
1kV
DP112
DP111
CP114
220uF
35V
LP114
22uH
JP910
RP112
10K
LP112
100uH
P19 20usec
55.2Vp-p
P18 20usec
96.8Vp-p
CP141
470
2kV
DP140
CP151
470
2kV
DP150
P20 20usec
36Vp-p
+137Vr SOURCE
CP110
220uF
200V
+33Vr SOURCE
+15Vr SOURCE
RP130
10K
CP130
220uF
35V
-15Vr SOURCE
RP135
10K
CP135
220uF
25V
LP129
+20Vr SOURCE
CP120
330uF
35V
CL008
0.1
63V
+10Vr SOURCE
CP140
1000uF
16V
+6Vr SOURCE
LL100
FL100
250mA
CP150
2200uF
16V
+6Ar SOURCE
SCHEMATIC NOTES
1. RESISTANCE VALUES ARE IN OHMS; K=X1000, Meg=X1,000,000.
RESISTORS ARE 0.250W OR LESS 5%, EXCEPT WHERE INDICATED.
[ ] INDICATES FLAT MAXI-CHIP COMPONENT, 1/8W EXCEPT WHERE INDICATED.
/ \ INDICATES FLAT MINI-CHIP COMPONENT, 1/16W EXCEPT WHERE INDICATED.
2. CAPACITANCE VALUES 1.0 AND ABOVE ARE IN pF, VALUES BELOW 1.0 ARE IN µf
EXCEPT WHERE INDICATED. VOLTAGE RATING IS 50V EXCEPT WHERE INDICATED.
[ ] INDICATES FLAT MAXI-CHIP COMPONENT.
/ \ INDICATES FLAT MINI-CHIP COMPONENT.
\ / INDICATES FLAT MINI-CHIP COMPONENT.
3. ⏚ DENOTES CHASSIS GROUND. ⊗ INDICATES CONNECTION VIA POINT-TO-POINT WIRE.
⏚ DENOTES ISOLATED GROUND.
-INDICATES JUMPER WIRE.
-INDICATES ZERO OHM CHIP COMPONENT.
SERVICE NOTICE
H_DRIVE

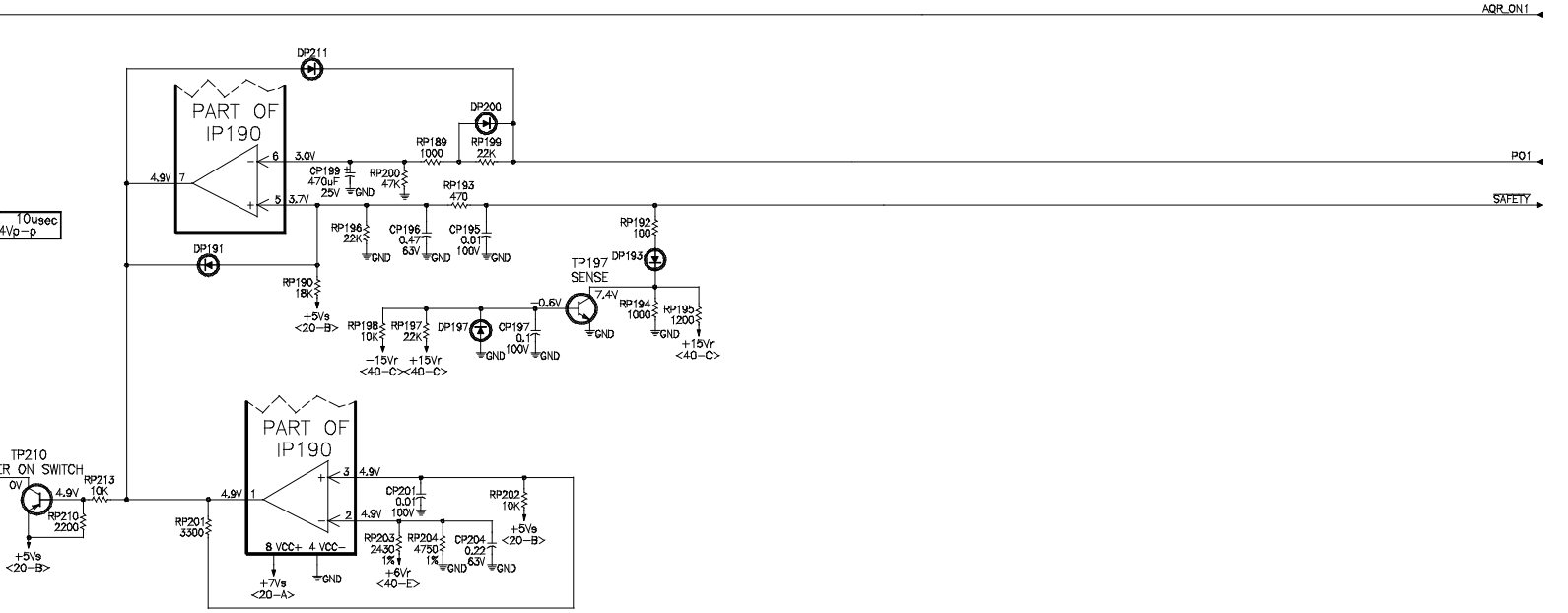
AQR_ON1
DP211
PART OF IP190
DP200
RP189
1000
RP199
22K
3.0V
CP199
470uF
25V
RP200
47K
3.7V
RP193
470
PO1
SAFETY
RP196
22K
CP196
0.47
63V
CP195
0.01
100V
DP191
RP190
18K
+5Vs
<20-B>
RP192
100
DP193
TP197
SENSE
7.4V
-0.6V
RP194
1000
RP195
1200
+15Vr
<40-C>
RP198
10K
RP197
22K
DP197
CP197
0.1
100V
-15Vr +15Vr
<40-C><40-C>
TP210
ON SWITCH
RP213
10K
RP210
2200
+5Vs
<20-B>
RP201
3300
PART OF IP190
CP201
0.01
100V
RP202
10K
+5Vs
<20-B>
RP203
2430
1%
RP204
4750
1%
CP204
0.22
63V
+6Vr
<40-E>
+7Vs
<20-A>