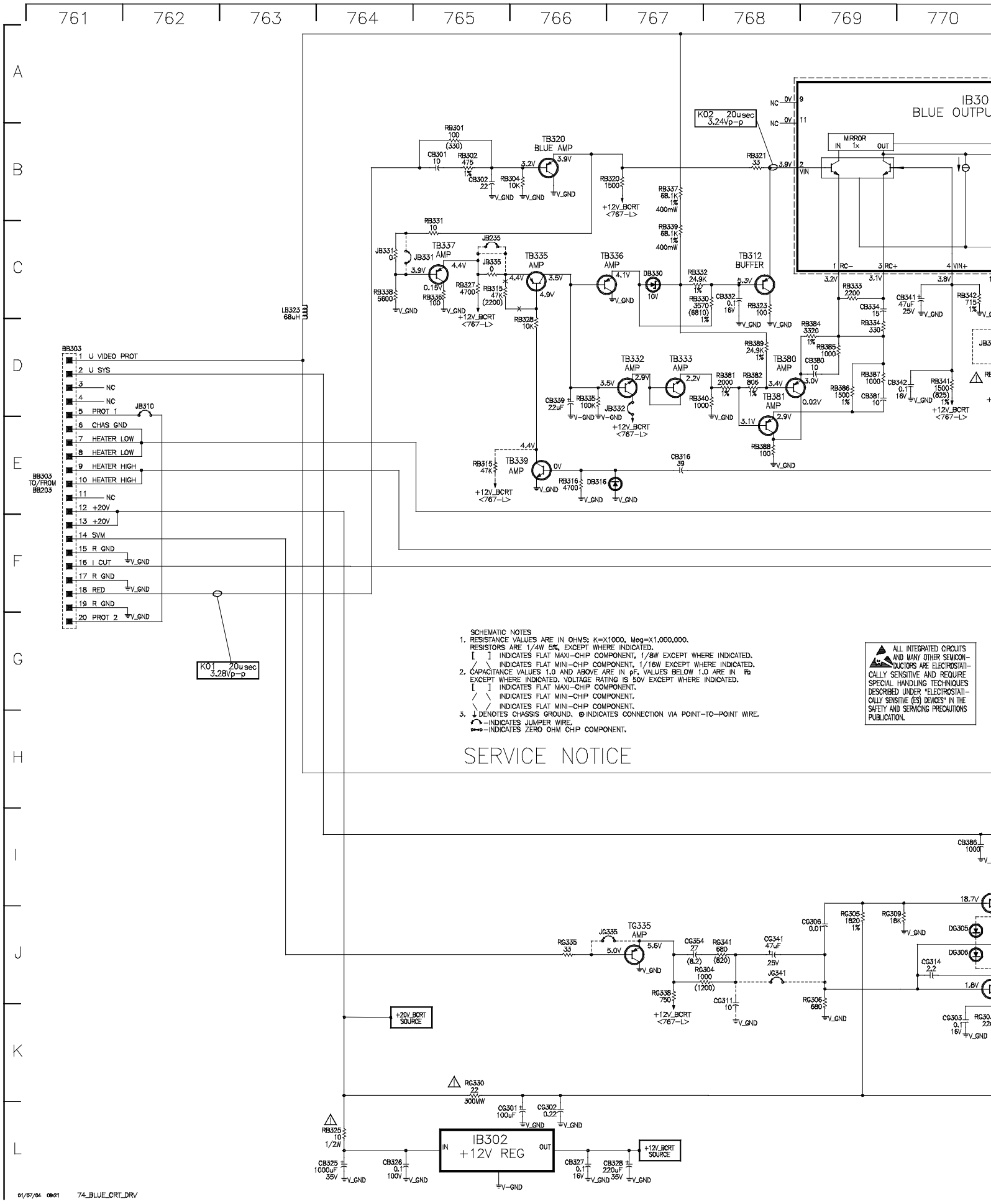
761
762
763
764
765
766
767
768
769
770
A
B
C
D
E
F
G
H
I
J
K
L
IB30
BLUE OUTPU
MIRROR
IN 1x OUT
K02 20usec
3.24Vp-p
TB320
BLUE AMP
TB337
AMP
TB335
AMP
TB336
AMP
TB312
BUFFER
TB332
AMP
TB333
AMP
TB380
AMP
TB381
AMP
TB339
AMP
TG335
AMP
BB303
1 U VIDEO PROT
2 U SYS
3 NC
4 NC
5 PROT 1
6 CHAS GND
7 HEATER LOW
8 HEATER LOW
9 HEATER HIGH
10 HEATER HIGH
11 NC
12 +20V
13 +20V
14 SVM
15 R GND
16 I CUT
17 R GND
18 RED
19 R GND
20 PROT 2
BB303 TO/FROM BB203
K01 20usec
3.28Vp-p
SCHEMATIC NOTES
1. RESISTANCE VALUES ARE IN OHMS: K=X1000, Meg=X1,000,000.
RESISTORS ARE 1/4W 5%, EXCEPT WHERE INDICATED.
[ ] INDICATES FLAT MAXI-CHIP COMPONENT, 1/8W EXCEPT WHERE INDICATED.
/ \ INDICATES FLAT MINI-CHIP COMPONENT, 1/16W EXCEPT WHERE INDICATED.
2. CAPACITANCE VALUES 1.0 AND ABOVE ARE IN pF. VALUES BELOW 1.0 ARE IN µF
EXCEPT WHERE INDICATED. VOLTAGE RATING IS 50V EXCEPT WHERE INDICATED.
[ ] INDICATES FLAT MAXI-CHIP COMPONENT.
/ \ INDICATES FLAT MINI-CHIP COMPONENT.
\ / INDICATES FLAT MINI-CHIP COMPONENT.
3. DENOTES CHASSIS GROUND. INDICATES CONNECTION VIA POINT-TO-POINT WIRE.
-INDICATES JUMPER WIRE.
-INDICATES ZERO OHM CHIP COMPONENT.
SERVICE NOTICE
ALL INTEGRATED CIRCUITS AND MANY OTHER SEMICONDUCTORS ARE ELECTROSTATICALLY SENSITIVE AND REQUIRE SPECIAL HANDLING TECHNIQUES DESCRIBED UNDER "ELECTROSTATICALLY SENSITIVE (ES) DEVICES" IN THE SAFETY AND SERVICING PRECAUTIONS PUBLICATION.
+20V_BCRT SOURCE
IB302
+12V REG
+12V_BCRT SOURCE
01/07/04 09:21 74_BLUE_CRT_DRV

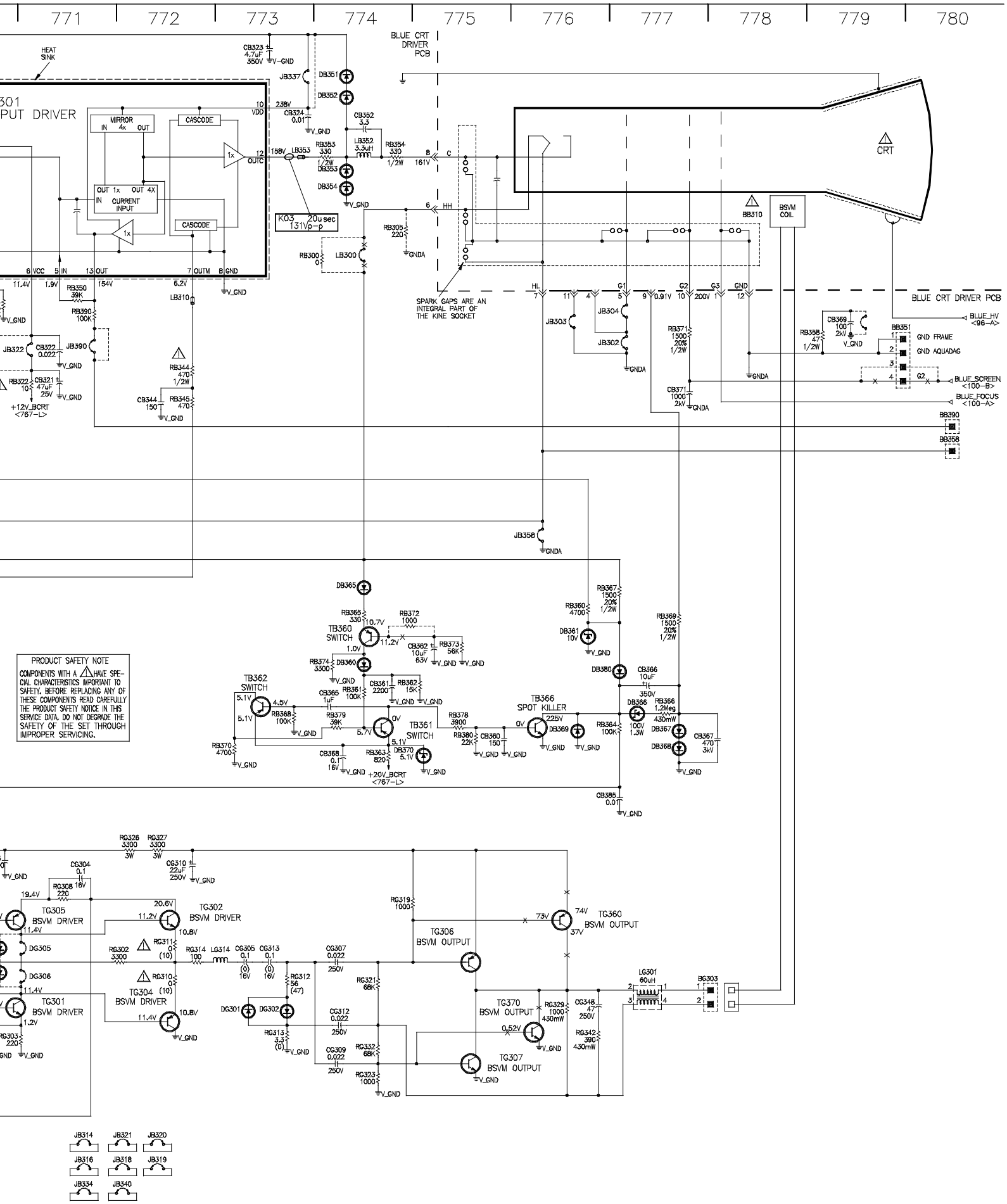
771
772
773
774
775
776
777
778
779
780
HEAT SINK
301
PUT DRIVER
MIRROR
CASCODE
CURRENT INPUT
BLUE CRT DRIVER PCB
CRT
BSVM COIL
SPARK GAPS ARE AN INTEGRAL PART OF THE KINE SOCKET
BLUE_HV <96-A>
GND FRAME
GND AQUADAG
BLUE_SCREEN <100-B>
BLUE_FOCUS <100-A>
TB360 SWITCH
TB362 SWITCH
TB361 SWITCH
TB366 SPOT KILLER
+12V_BCRT <767-L>
+20V_BCRT <767-L>
PRODUCT SAFETY NOTE
COMPONENTS WITH A ⚠ HAVE SPECIAL CHARACTERISTICS IMPORTANT TO SAFETY. BEFORE REPLACING ANY OF THESE COMPONENTS READ CAREFULLY THE PRODUCT SAFETY NOTICE IN THIS SERVICE DATA. DO NOT DEGRADE THE SAFETY OF THE SET THROUGH IMPROPER SERVICING.
TG305 BSVM DRIVER
TG302 BSVM DRIVER
TG304 BSVM DRIVER
TG301 BSVM DRIVER
TG306 BSVM OUTPUT
TG360 BSVM OUTPUT
TG370 BSVM OUTPUT
TG307 BSVM OUTPUT