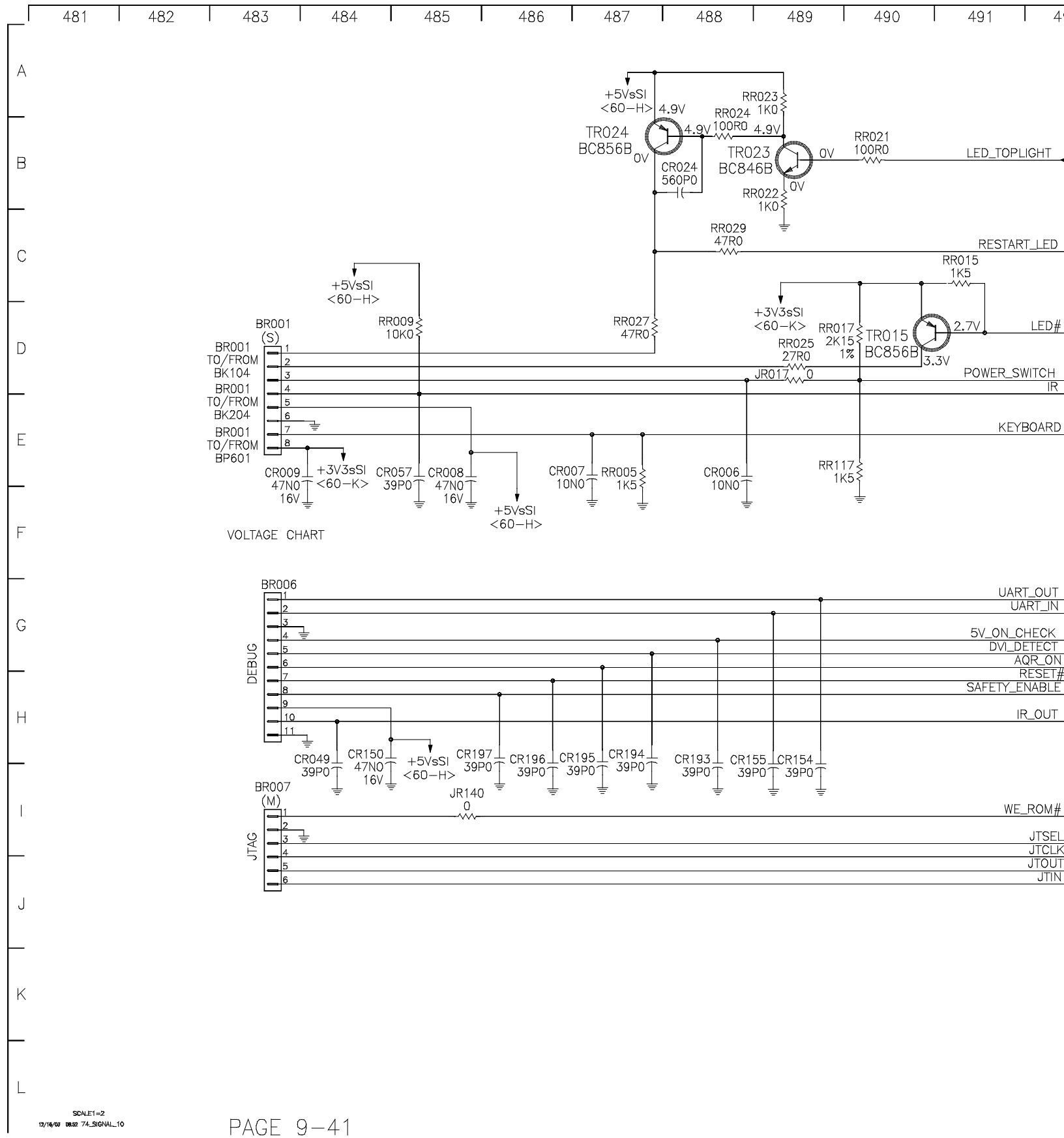


SCALE1=2
12/16/03 08:52 74_SIGNAL_10

492 | 493 | 494 | 495 | 496 | 497 | 498 | 499 | 500

SCHEMATIC NOTES
1. RESISTANCE VALUES ARE IN OHMS; K=X1000, Meg=X1,000,000.
RESISTORS ARE 0.250W 5%, EXCEPT WHERE INDICATED.
[ ] INDICATES FLAT MAXI-CHIP COMPONENT, 1/8W EXCEPT WHERE INDICATED.
/ \ INDICATES FLAT MINI-CHIP COMPONENT, 1/16W EXCEPT WHERE INDICATED.
2. CAPACITANCE VALUES 1.0 AND ABOVE ARE IN pF, VALUES BELOW 1.0 ARE IN F
EXCEPT WHERE INDICATED. VOLTAGE RATING IS 50V EXCEPT WHERE INDICATED.
[ ] INDICATES FLAT MAXI-CHIP COMPONENT.
/ \ INDICATES FLAT MINI-CHIP COMPONENT.
\ / INDICATES FLAT MINI-CHIP COMPONENT.
3. ⏚ DENOTES CHASSIS GROUND. ⊗ INDICATES CONNECTION VIA POINT-TO-POINT WIRE.
⏚ DENOTES ISOLATED GROUND.
—INDICATES JUMPER WIRE.
—INDICATES ZERO OHM CHIP COMPONENT.

SERVICE NOTICE

ALL INTEGRATED CIRCUITS AND MANY OTHER SEMICONDUCTORS ARE ELECTROSTATICALLY SENSITIVE AND REQUIRE SPECIAL HANDLING TECHNIQUES DESCRIBED UNDER "ELECTROSTATICALLY SENSITIVE (ES) DEVICES" IN THE SAFETY AND SERVICING PRECAUTIONS PUBLICATION.

PRODUCT SAFETY NOTE
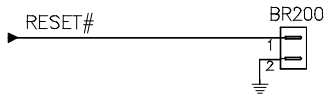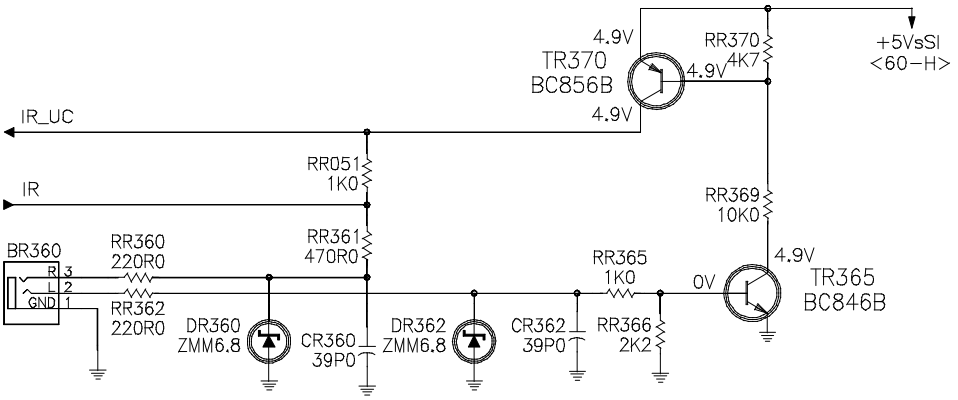
COMPONENTS WITH A ⚠ HAVE SPECIAL CHARACTERSTICS IMPORTANT TO SAFETY. BEFORE REPLACING ANY OF THESE COMPONENTS READ CAREFULLY THE PRODUCT SAFETY NOTICE IN THIS SERVICE DATA. DO NOT DEGRADE THE SAFETY OF THE SET THROUGH IMPROPER SERVICING.