TVCR19E1

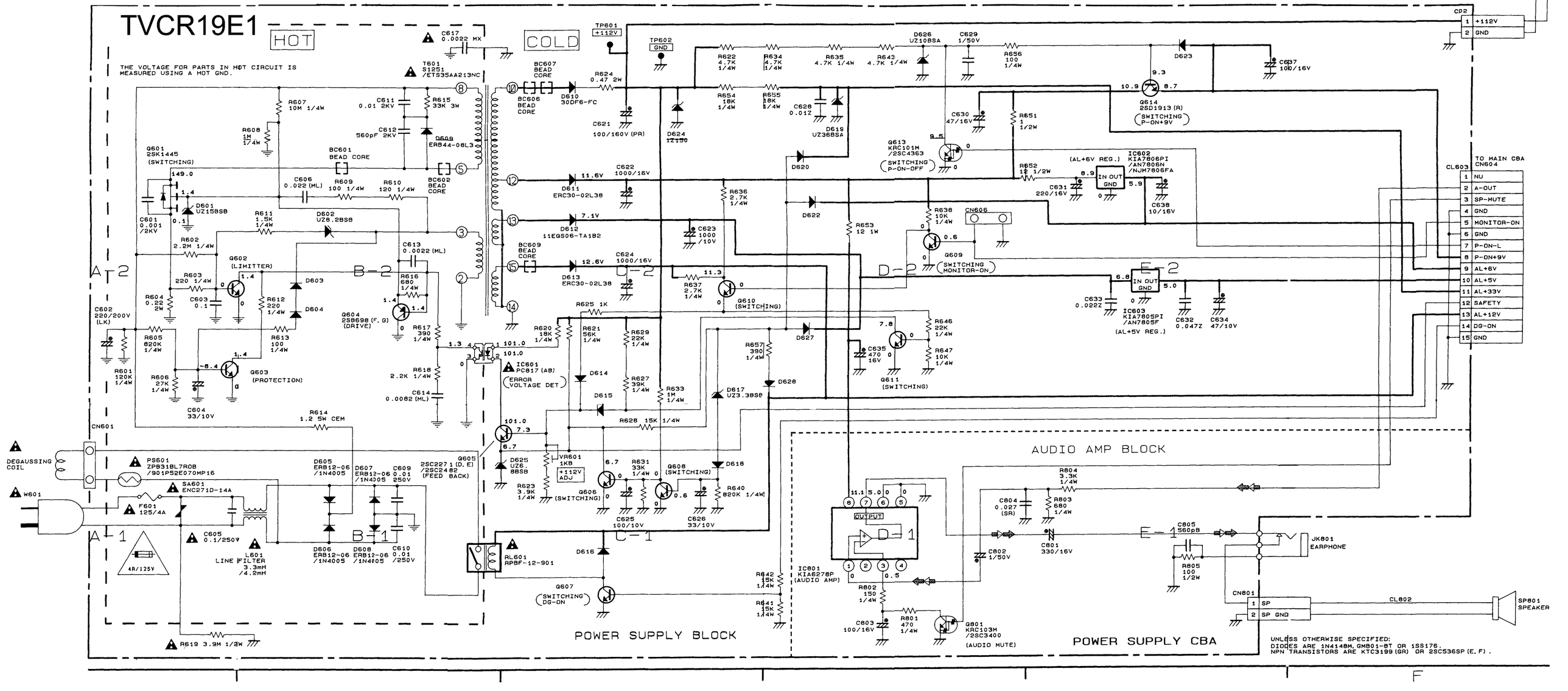
HOT
COLD
THE VOLTAGE FOR PARTS IN HOT CIRCUIT IS MEASURED USING A HOT GND.
TP601 +112V
TP602 GND
CP2
1 +112V
2 GND
TO MAIN CBA CN604
CL603
1 NU
2 A-OUT
3 SP-MUTE
4 GND
5 MONITOR-ON
6 GND
7 P-ON-L
8 P-ON+9V
9 AL+6V
10 AL+5V
11 AL+33V
12 SAFETY
13 AL+12V
14 DG-ON
15 GND
Q601 2SK1445 (SWITCHING)
Q602 (LIMITTER)
Q603 (PROTECTION)
Q604 2SB698 (F, G) (DRIVE)
Q605 2SC2271 (D, E) /2SC2482 (FEED BACK)
Q606 (SWITCHING)
Q607 (SWITCHING DG-ON)
Q608 (SWITCHING)
Q609 (SWITCHING MONITOR-ON)
Q610 (SWITCHING)
Q611 (SWITCHING)
Q613 KRC101M /2SC4363 (SWITCHING P-ON-OFF)
Q614 2SD1913 (R) (SWITCHING P-ON+9V)
IC601 PC817 (AB) (ERROR VOLTAGE DET)
IC602 KIA7806PI /AN7806N /NJM7806FA (AL+6V REG.)
IC603 KIA7805PI /AN7805F (AL+5V REG.)
CN601
DEGAUSSING COIL
W601
PS601 ZPB31BL7R0B /901P52E070MP16
SA601 ENC271D-14A
F601 125/4A
4A/125V
L601 LINE FILTER 3.3mH /4.2mH
RL601 RPBF-12-901
POWER SUPPLY BLOCK
AUDIO AMP BLOCK
IC801 KIA6278P (AUDIO AMP)
Q801 KRC103M /2SC3400 (AUDIO MUTE)
JK801 EARPHONE
CN801
1 SP
2 SP GND
CL802
SP801 SPEAKER
POWER SUPPLY CBA
UNLESS OTHERWISE SPECIFIED:
DIODES ARE 1N4148M, GM801-BT OR 1SS176.
NPN TRANSISTORS ARE KTC3199(GR) OR 2SC536SP(E, F).

TVCR19E1

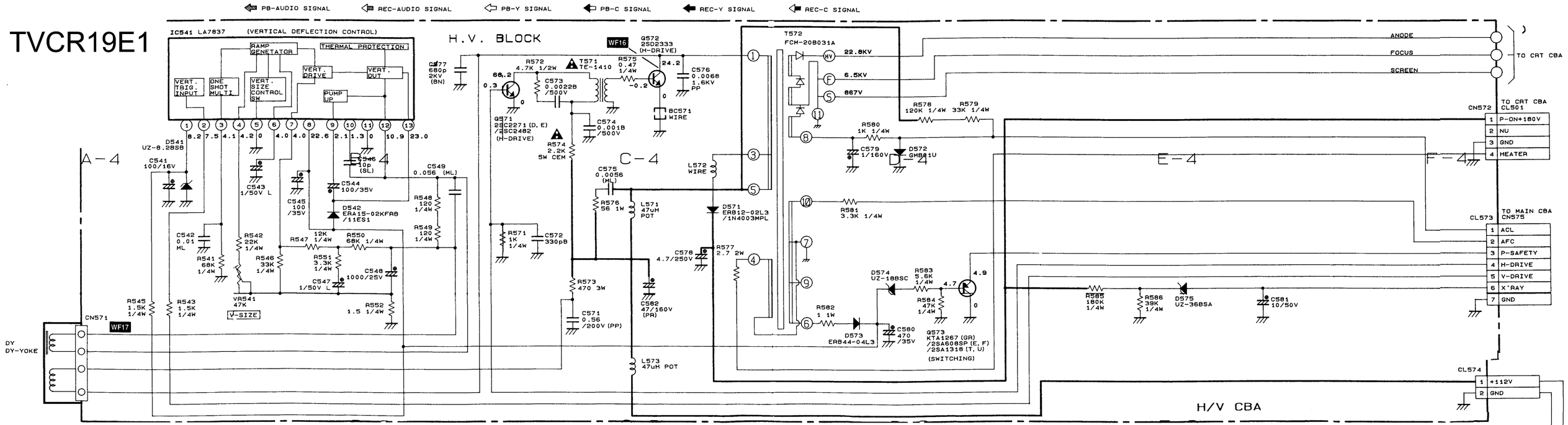
PB-AUDIO SIGNAL
REC-AUDIO SIGNAL
PB-Y SIGNAL
PB-C SIGNAL
REC-Y SIGNAL
REC-C SIGNAL
IC541 LA7837 (VERTICAL DEFLECTION CONTROL)
RAMP GENERATOR
THERMAL PROTECTION
VERT. TRIG. INPUT
ONE SHOT MULTI
VERT. SIZE CONTROL SW
VERT. DRIVE
VERT. OUT
PUMP UP
H.V. BLOCK
WF16
WF17
CN571
DY
DY-YOKE
V-SIZE
VR541 47K
A-4
C-4
E-4
F-4
T572 FCM-208031A
22.8KV
6.5KV
867V
ANODE
FOCUS
SCREEN
TO CRT CBA
CN572
TO CRT CBA CL501
P-ON+180V
NU
GND
HEATER
CL573
TO MAIN CBA CN575
ACL
AFC
P-SAFETY
H-DRIVE
V-DRIVE
X'RAY
GND
CL574
+112V
GND
H/V CBA

1. DO NOT USE THE PART NUMBERS SHOWN ON THIS DRAWING FOR ORDERING. THE CORRECT PART NUMBERS ARE SHOWN IN THE PARTS LIST, AND MAY BE SLIGHTLY DIFFERENT OR AMENDED SINCE THIS DRAWING WAS PREPARED.
2. TO MAINTAIN ORIGINAL FUNCTION AND RELIABILITY OF REPAIRED UNITS, USE ONLY ORIGINAL REPLACEMENT PARTS WHICH ARE LISTED WITH THEIR PART NUMBERS IN THE PARTS LIST SECTION OF THE SERVICE MANUAL.

"●"= SMD

MODE : SP/REC

THE SAME VOLTAGE FOR BOTH PLAY & REC MODES.

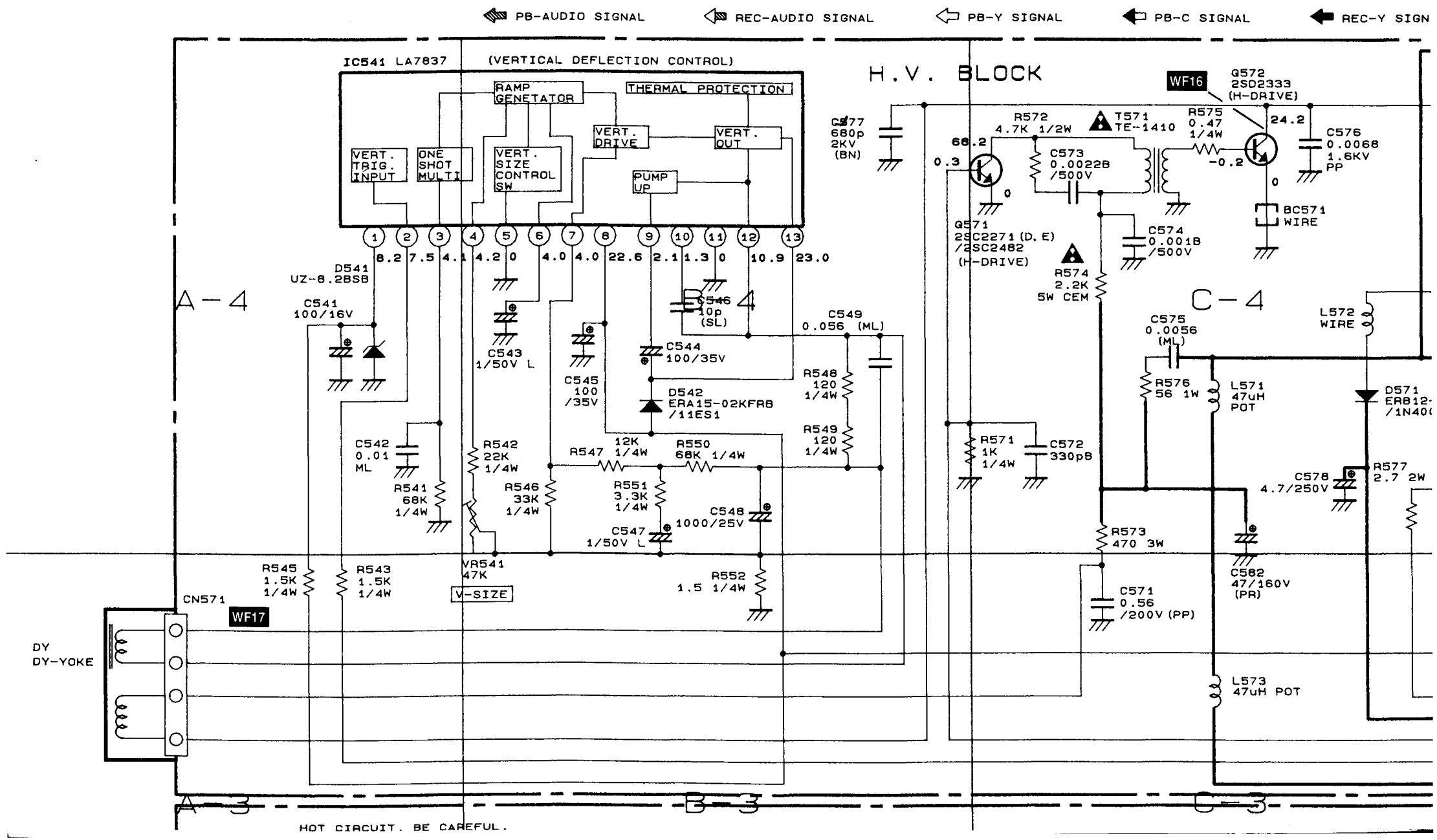

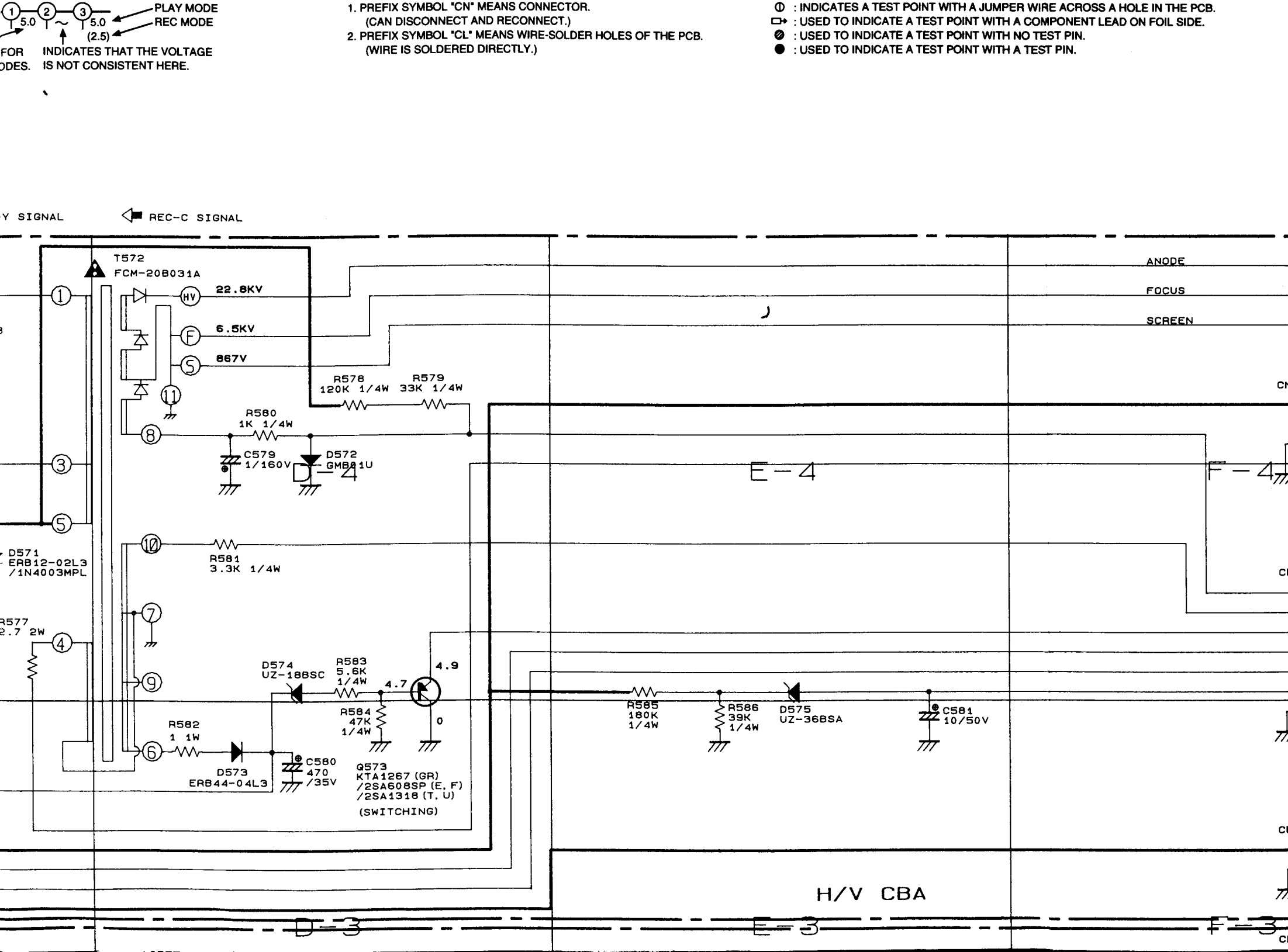
PLAY MODE
REC MODE
5.0
5.0
(2.5)
FOR
ODES.
INDICATES THAT THE VOLTAGE
IS NOT CONSISTENT HERE.
1. PREFIX SYMBOL "CN" MEANS CONNECTOR.
(CAN DISCONNECT AND RECONNECT.)
2. PREFIX SYMBOL "CL" MEANS WIRE-SOLDER HOLES OF THE PCB.
(WIRE IS SOLDERED DIRECTLY.)
: INDICATES A TEST POINT WITH A JUMPER WIRE ACROSS A HOLE IN THE PCB.
: USED TO INDICATE A TEST POINT WITH A COMPONENT LEAD ON FOIL SIDE.
: USED TO INDICATE A TEST POINT WITH NO TEST PIN.
: USED TO INDICATE A TEST POINT WITH A TEST PIN.
Y SIGNAL
REC-C SIGNAL
T572
FCM-20B031A
22.8KV
6.5KV
867V
R578
120K 1/4W
R579
33K 1/4W
R580
1K 1/4W
C579
1/160V
D572
GMB01U
D571
ERB12-02L3
/1N4003MPL
R581
3.3K 1/4W
R577
2.7 2W
D574
UZ-18BSC
R583
5.6K
1/4W
4.9
4.7
R584
47K
1/4W
0
R582
1 1W
D573
ERB44-04L3
C580
470
/35V
Q573
KTA1267 (GR)
/2SA608SP (E, F)
/2SA1318 (T, U)
(SWITCHING)
R585
180K
1/4W
R586
39K
1/4W
D575
UZ-36BSA
C581
10/50V
ANODE
FOCUS
SCREEN
E-4
F-4
H/V CBA
D-3
E-3
F-3

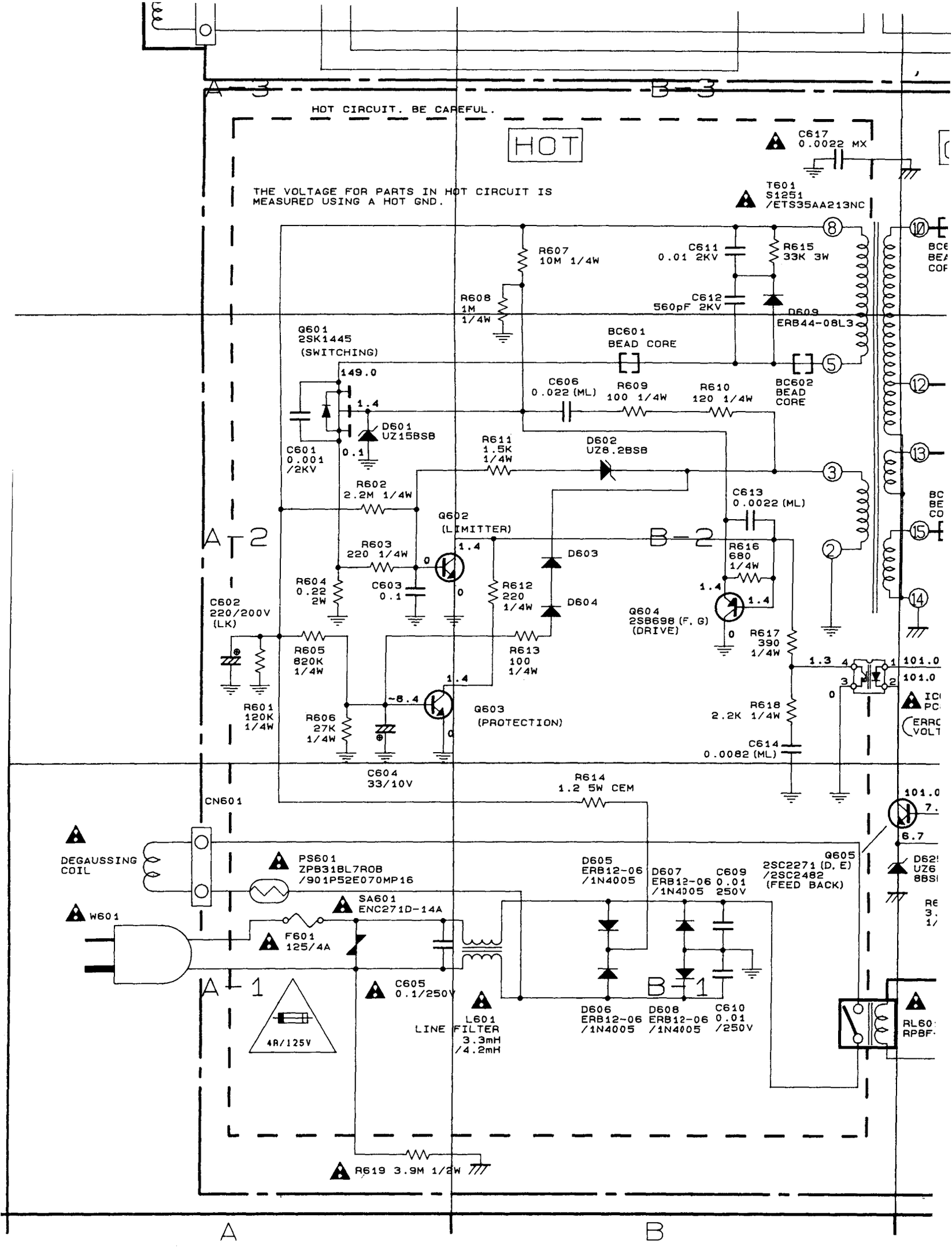
HOT CIRCUIT. BE CAREFUL.
HOT
THE VOLTAGE FOR PARTS IN HOT CIRCUIT IS MEASURED USING A HOT GND.
C617 0.0022 MX
T601 S1251 /ETS35AA213NC
R607 10M 1/4W
C611 0.01 2KV
R615 33K 3W
R608 1M 1/4W
C612 560pF 2KV
D609 ERB44-08L3
Q601 2SK1445 (SWITCHING)
BC601 BEAD CORE
BC602 BEAD CORE
149.0
1.4
D601 UZ15BSB
C601 0.001 /2KV
0.1
C606 0.022 (ML)
R609 100 1/4W
R610 120 1/4W
R611 1.5K 1/4W
D602 UZ8.2BSB
R602 2.2M 1/4W
C613 0.0022 (ML)
Q602 (LIMITTER)
R603 220 1/4W
D603
R616 680 1/4W
R604 0.22 2W
C603 0.1
R612 220 1/4W
D604
Q604 2SB698 (F, G) (DRIVE)
C602 220/200V (LK)
R605 820K 1/4W
R613 100 1/4W
R617 390 1/4W
1.3
101.0
R601 120K 1/4W
R606 27K 1/4W
-8.4
Q603 (PROTECTION)
R618 2.2K 1/4W
C614 0.0082 (ML)
C604 33/10V
R614 1.2 5W CEM
CN601
DEGAUSSING COIL
PS601 ZPB31BL7R0B /901P52E070MP16
D605 ERB12-06 /1N4005
D607 ERB12-06 /1N4005
C609 0.01 250V
Q605 2SC2271 (D, E) /2SC2482 (FEED BACK)
6.7
W601
SA601 ENC271D-14A
F601 125/4A
C605 0.1/250V
L601 LINE FILTER 3.3mH /4.2mH
D606 ERB12-06 /1N4005
D608 ERB12-06 /1N4005
C610 0.01 /250V
4A/125V
R619 3.9M 1/2W
A-3
B-3
A-2
B-2
A-1
B-1
A
B

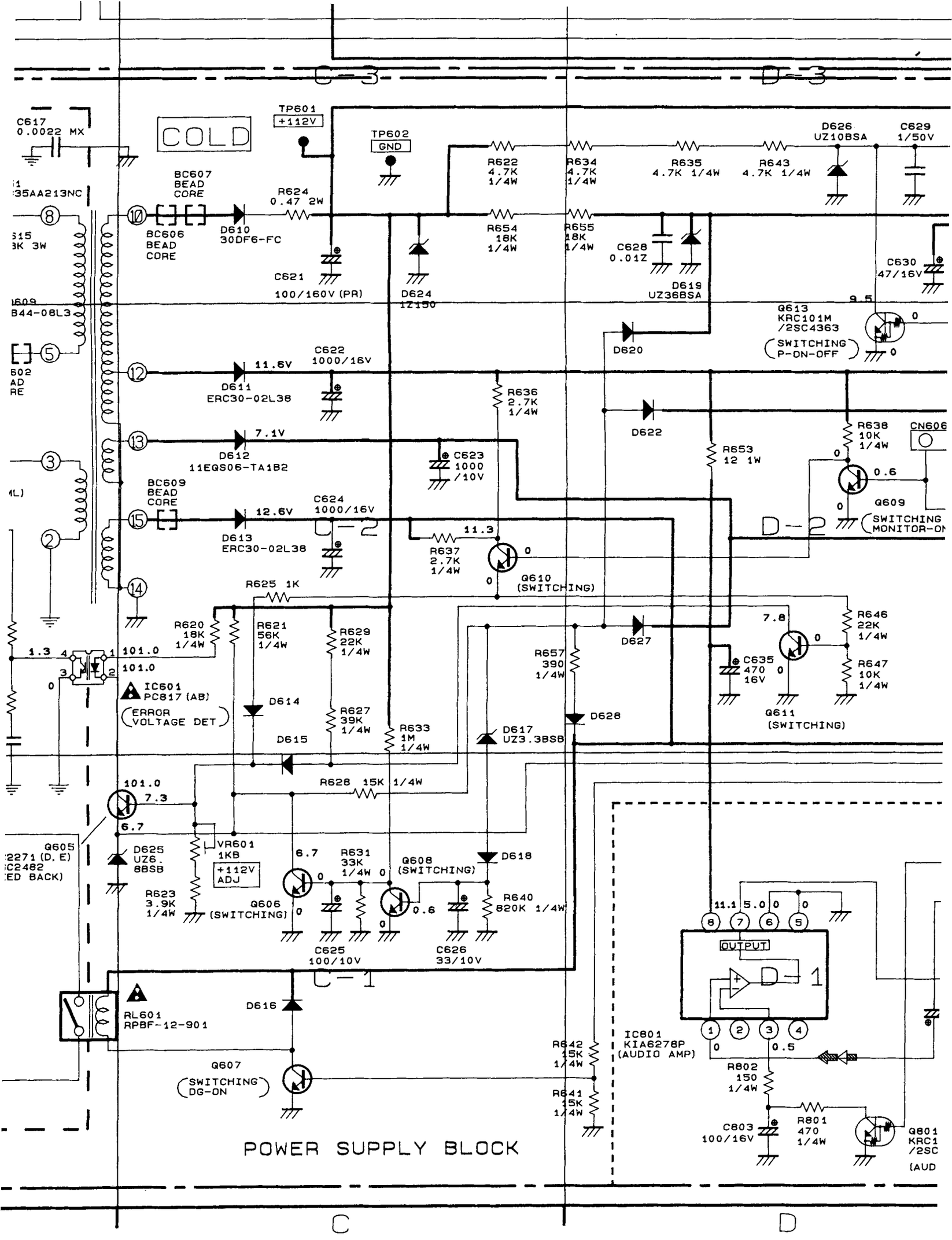
C-3
D-3
COLD
TP601
+112V
TP602
GND
C617
0.0022 MX
BC607
BEAD
CORE
R624
0.47 2W
BC606
BEAD
CORE
D610
30DF6-FC
C621
100/160V (PR)
D624
1Z150
R622
4.7K
1/4W
R634
4.7K
1/4W
R635
4.7K 1/4W
R643
4.7K 1/4W
D626
UZ10BSA
C629
1/50V
R654
18K
1/4W
R655
18K
1/4W
C628
0.01Z
D619
UZ36BSA
C630
47/16V
Q613
KRC101M
/2SC4363
SWITCHING
P-ON-OFF
D620
C622
1000/16V
11.6V
D611
ERC30-02L38
R636
2.7K
1/4W
D622
R638
10K
1/4W
CN606
7.1V
D612
11EQS06-TA1B2
C623
1000
/10V
R653
12 1W
Q609
SWITCHING
MONITOR-ON
BC609
BEAD
CORE
C624
1000/16V
12.6V
D613
ERC30-02L38
C-2
D-2
R637
2.7K
1/4W
Q610
(SWITCHING)
R625 1K
R620
18K
1/4W
R621
56K
1/4W
R629
22K
1/4W
D627
R646
22K
1/4W
R657
390
1/4W
C635
470
16V
R647
10K
1/4W
IC601
PC817 (AB)
ERROR
VOLTAGE DET
D614
R627
39K
1/4W
D628
Q611
(SWITCHING)
D615
R633
1M
1/4W
D617
UZ3.3BSB
R628 15K 1/4W
Q605
D625
UZ6.
8BSB
VR601
1KB
+112V
ADJ
R623
3.9K
1/4W
Q606
(SWITCHING)
R631
33K
1/4W
Q608
(SWITCHING)
D618
R640
820K 1/4W
C625
100/10V
C626
33/10V
C-1
RL601
RPBF-12-901
D616
Q607
SWITCHING
DG-ON
R642
15K
1/4W
R641
15K
1/4W
IC801
KIA6278P
(AUDIO AMP)
OUTPUT
D-1
R802
150
1/4W
C803
100/16V
R801
470
1/4W
POWER SUPPLY BLOCK
C
D

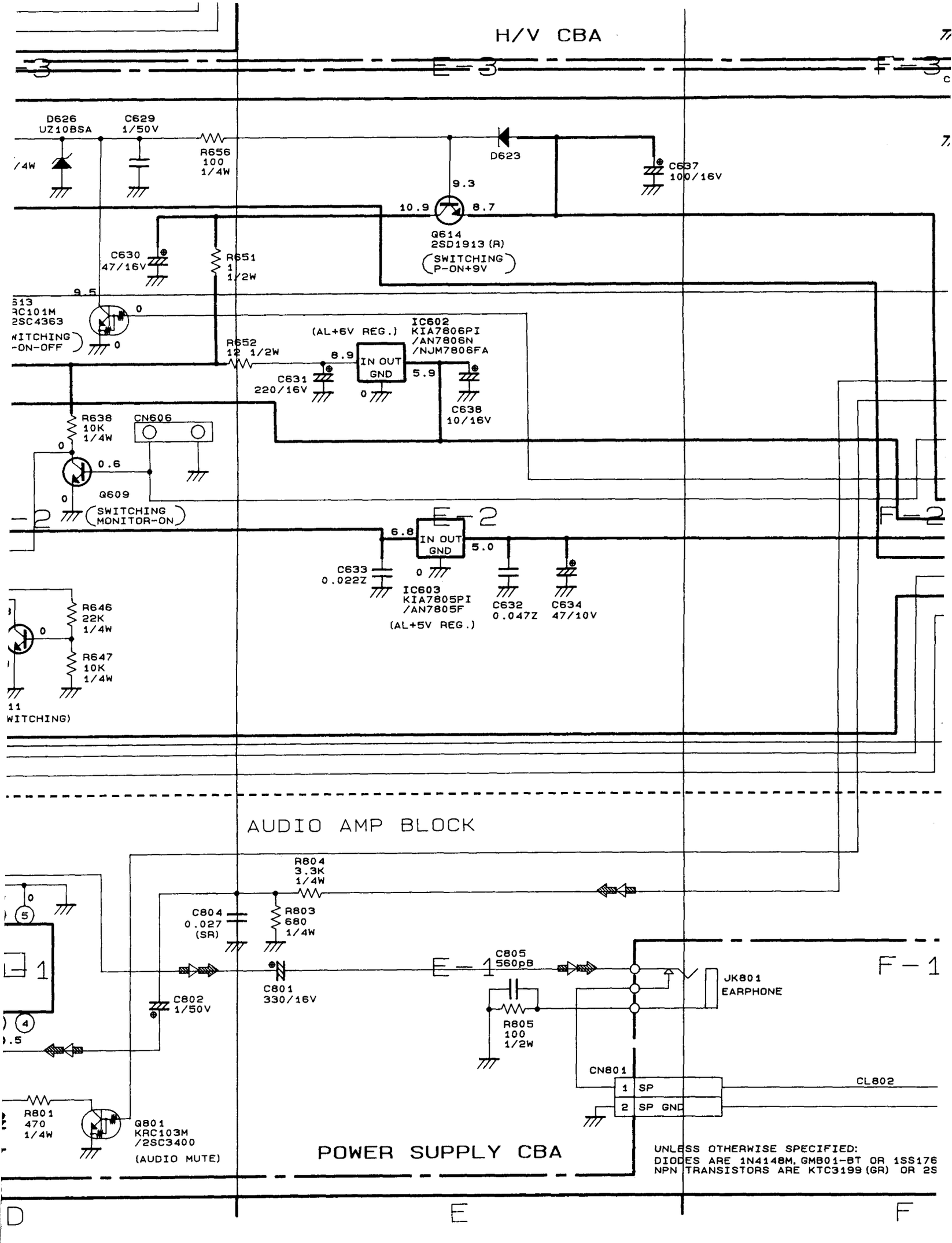
H/V CBA
E-3
F-3
D626
UZ10BSA
C629
1/50V
R656
100
1/4W
D623
C637
100/16V
9.3
10.9
8.7
Q614
2SD1913(R)
(SWITCHING
P-ON+9V)
C630
47/16V
R651
1
1/2W
9.5
0
513
RC101M
2SC4363
WITCHING
-ON-OFF)
0
R652
12 1/2W
(AL+6V REG.)
IC602
KIA7806PI
/AN7806N
/NJM7806FA
8.9
IN OUT
GND
5.9
C631
220/16V
0
C638
10/16V
R638
10K
1/4W
CN606
0
0.6
Q609
0
(SWITCHING
MONITOR-ON)
E-2
F-2
6.8
IN OUT
GND
5.0
C633
0.022Z
0
IC603
KIA7805PI
/AN7805F
(AL+5V REG.)
C632
0.047Z
C634
47/10V
R646
22K
1/4W
0
R647
10K
1/4W
11
WITCHING)
AUDIO AMP BLOCK
R804
3.3K
1/4W
C804
0.027
(SR)
R803
680
1/4W
E-1
F-1
C805
560pB
C801
330/16V
C802
1/50V
JK801
EARPHONE
R805
100
1/2W
CN801
1 SP
2 SP GND
CL802
R801
470
1/4W
Q801
KRC103M
/2SC3400
(AUDIO MUTE)
POWER SUPPLY CBA
UNLESS OTHERWISE SPECIFIED:
DIODES ARE 1N4148M, GMB01-BT OR 1SS176
NPN TRANSISTORS ARE KTC3199(GR) OR 2S
D
E
F

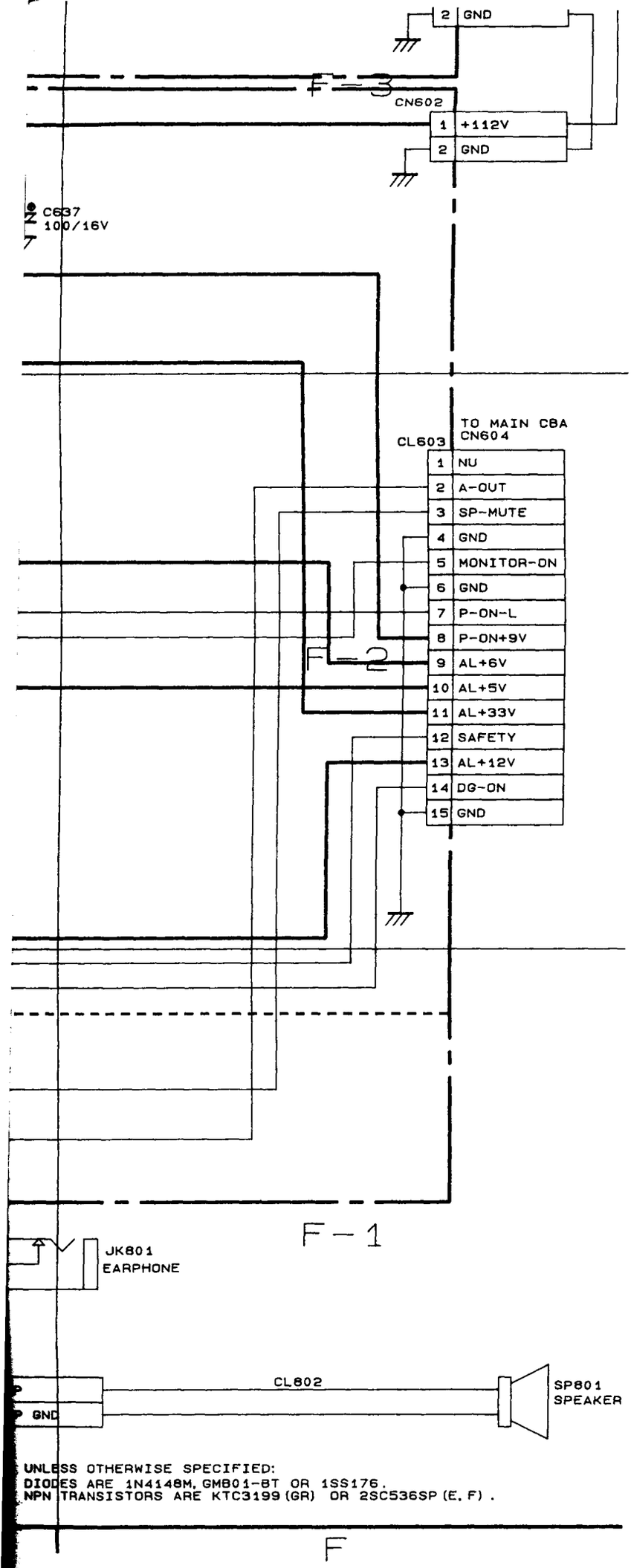

POWER SUPPLY
SCHEMATIC DIAGRAM
PARTS LOCATION GUIDE

Ref. No.	Position
ICS	
IC601	C-2
IC602	E-2
IC603	E-2
IC801	D-1
TRANSISTORS	
Q601	A-2
Q602	B-2
Q603	B-2
Q604	B-2
Q605	C-1
Q606	C-1
Q607	C-1
Q608	C-1
Q609	D-2
Q610	C-2
Q611	D-2
Q613	D-2
Q614	E-3
Q801	D-1
CONNECTORS	
CN601	A-1
CN602	F-3
CL603	F-2
CN606	D-2
CN801	E-1
CL802	F-1
VARIABLE RESISTORS	
VR601	C-1
TEST POINTS	
TP601	C-3
TP602	C-3