OPTICAL COMMUNICATIONS CIRCUITS

By Malcolm Plant

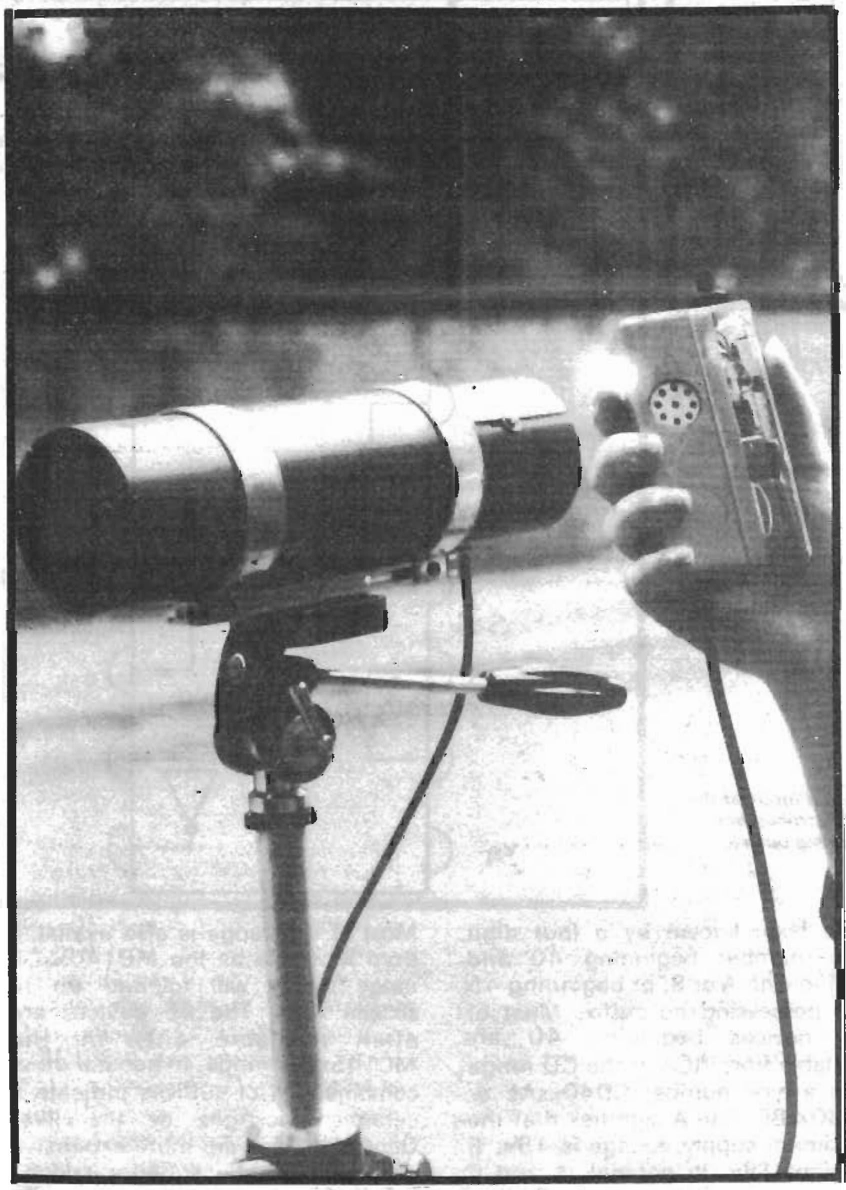

Prototype transmitter circuit for optical communications.

THE CIRCUITS shown enable an optical communications system to be built which, governed principally by the choice of lenses, provides communication over a distance of at least 500 metres.

The transmitter uses an LED (light-emitting diode) to produce an a.f. modulated, infra-red or visible beam of radiation which is detected by the phototransistor in the receiver circuit. This phototransistor should have a peak sensitivity at the peak emission wavelength of the LED if optimum efficiency is to be obtained. Should the LED be infra-red emitter TIXL26 radiating most of its radiation at 0.9µm, the phototransistor TIL66 provides a good match. However, visible red-emitting LEDs are suitable with this type of phototransistor, and both may be lower cost types than the ones suggested for an infra-red sensitive system. Note that the use of the infra-red emitting diode does not preclude the use of ordinary glass (borosilicate) lenses which are transparent to a radiation of 0.9 µm.

Note that each circuit employs a general purpose op amp (the 741) as a sensitive preamplifier of the signals from the microphone and the phototransistor. The input circuits to the op amps employ bootstrapping to increase the input impedance enabling, in the transmitter circuit, a crystal microphone to be used. The earpiece may be any type having an impedance in the range 200Ω to 2kΩ. The gain of each circuit is conveniently controlled by making the feedback resistor (RV1) variable. Should the circuits be unstable in operation

Epitaxial phototransistor with feedback has fast response

by Vernon P. O'Neil
Motorola Inc., Discrete Semiconductor Division, Phoenix, Ariz.

A high-gain negative-feedback loop will reduce the response time of an epitaxial phototransistor to 100 nanoseconds—a significant improvement over several schemes previously suggested.[1,2,3] Because of its construction, the epitaxial device all but eliminates the diffusion of carriers into its depletion region from the bulk collector region, which slows a conventional nonepitaxial phototransistor's operating speed. And added feedback reduces the input-signal swing across the collector-base junction to 1% of what it is normally, further reducing the input-capacitance charge and discharge times.

The MRD 300 phototransistor shown in the circuit has a typical rise time of 2.5 microseconds and a fall time of 4 μs if operated in the conventional emitter-follower configuration. In this modified circuit Q_2 serves as the feedback amplifier that keeps the base of the phototransistor at an almost constant voltage for changes in input-signal level. Thus the effective input capacitance that must be charged and discharged is reduced. Q_3 serves as a buffer. Note that using feedback that is negative enables the switching times to be maximally reduced without fear of creating instability (that is, oscillations can be generated with circuits using positive feedback).

With this circuit, both the rise time and the fall time of the phototransistor are reduced to 100 ns. The output voltage is equal to the product of feedback resistance (10 kilohms) and the collector-base photocurrent. The photograph shows a typical output waveform.

As for the phototransistor itself, it can be hard to determine from data sheets if one is epitaxial or not. The best way to find out is to consult the manufacturer. ☐

References
1. "Why not a cascode optocoupler?", Electronics, March 2, 1978, p. 132.
2. "Why not a cascode optocoupler? Here's why not", Electronics, April 27, 1978, p. 154.
3. "Bootstrapping a phototransistor improves its pulse response", Electronics, Aug. 17, 1978, p. 105.

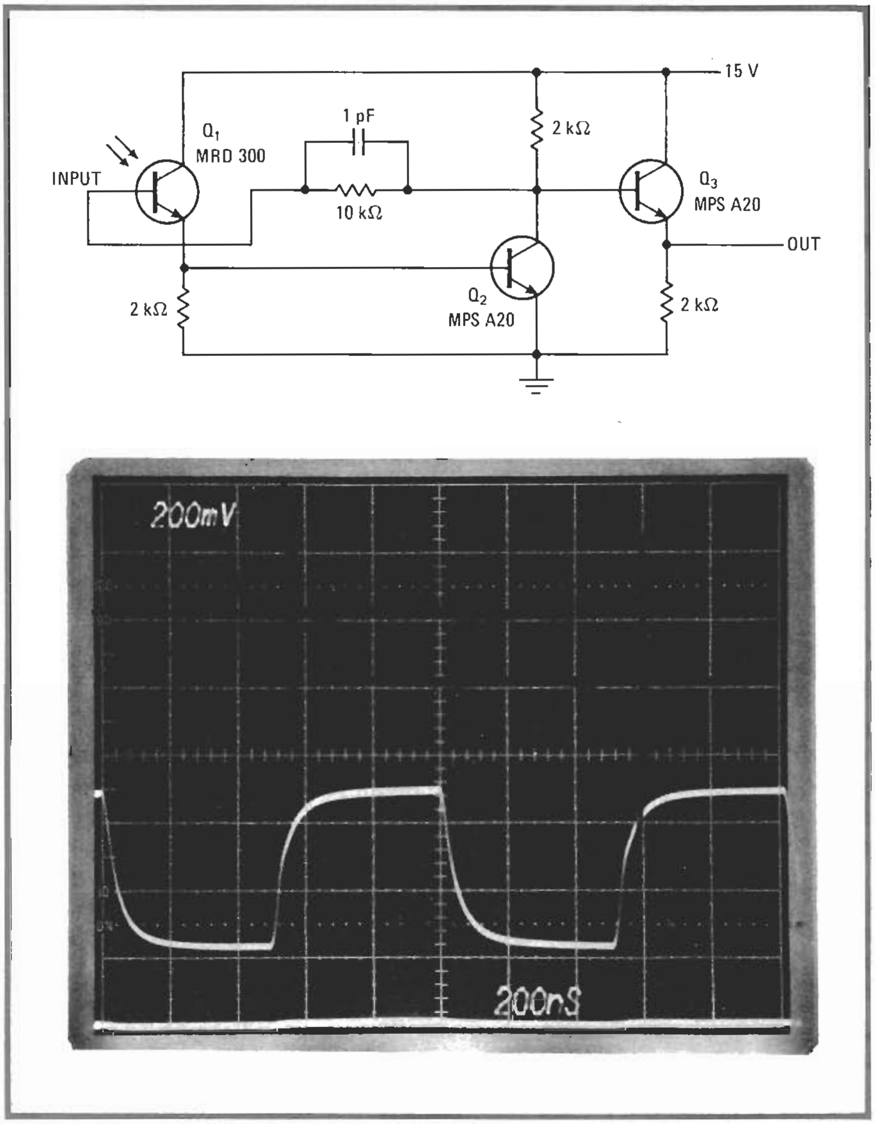

Speedy. Collector-to-base capacitance of phototransistor Q_1 is reduced by employing epitaxial device (MRD 300) and high-gain negative feedback (Q_2), so that operating speed can be increased. Emitter-follower Q_3 provides low-impedance output. Photograph shows typical output response.

Optoelectronic alarm circuit is time-sensitive

by Forrest M. Mims III
San Marcos, Texas

Using an optoelectronic slot switch and a 556 dual timer operating as both a pulse generator and missing-pulse detector, this circuit generates an alarm when an opaque object blocks the light input for longer than a preset time interval. It has many applications and is especially useful when united with a slotted disk to monitor motor speed stroboscopically, indicating when the steady-state rotation rate is too high or low. It can also be used on the production line for checking the width of materials.

Generally, the output of the pulser periodically activates the light-emitting diode of the H13B1 switch. Other sensors may be used; Darlington photosensing transistors, though, are the most sensitive. In this case, the pulser's operating frequency is set at 1.42 kilohertz, but it may be suitably selected by replacing the 100-kilohm resistor at pin 1 with a potentiometer.

As shown, the H13B1 is built with a slot of several millimeters separating its LED from the output phototransistor so that objects can be placed in the air gap between them. When the slot is not blocked, the phototransistor continuously resets the missing-pulse detector. Should the light path be blocked, pin 8 will remain high and the threshold voltage at pin 12 will fall at a rate determined by the adjustable R_1C_1 time constant.

Depending on the value of this constant, which can be selected for delays from microseconds to seconds, the detector will generate a step voltage if it is not reset within that period. The signal is then inverted by Q_1, which in turn fires the silicon controlled rectifier to drive the load, R_L.

Designer's casebook is a regular feature in *Electronics*. We invite readers to submit original and unpublished circuit ideas and solutions to design problems. Explain briefly but thoroughly the circuit's operating principle and purpose. We'll pay $50 for each item published.

Light block. Pulser operating as astable multivibrator triggers LED in slot switch so that missing-pulse detector is periodically reset. Interruptions in light beam caused by external object cut off reset pulses, causing circuit to generate alarm if interval exceeds preset time.

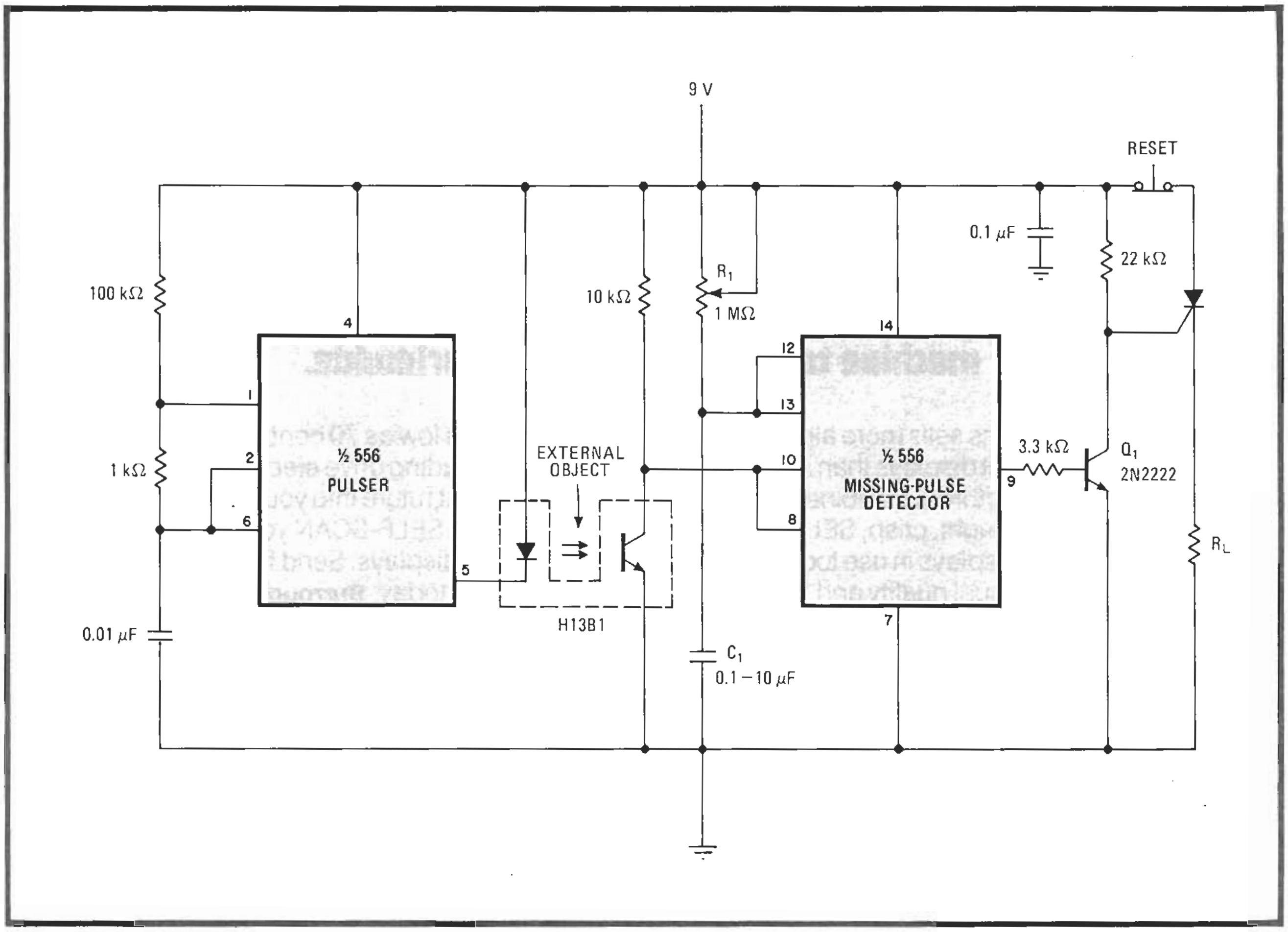

AN-440
Application Note

THEORY AND CHARACTERISTICS OF PHOTOTRANSISTORS

Prepared by
John Bliss
Applications Engineering

A brief history of the photo-electric effect is discussed, followed by a comprehensive analysis of the effect in bulk semiconductors, pn junctions and phototransistors. A model is presented for the phototransistor. Static and transient data for the MRD300 provide typical phototransistor characteristics. Appendices provide a discussion of the relationship of irradiation and illumination and define terms specifically related to phototransistors.

MOTOROLA Semiconductor Products Inc.

THEORY AND CHARACTERISTICS OF PHOTOTRANSISTORS

INTRODUCTION

Phototransistor operation is based on the sensitivity of a pn junction to radiant energy. If radiant energy of proper wave-length is made to impinge on a junction, the current through that junction will increase. This optoelectronic phenomenon has provided the circuit designer with a device for use in a wide variety of applications. However, to make optimum use of the phototransistor, the designer should have a sound grasp of its operating principles and characteristics.

HISTORY

The first significant relationships between radiation and electricity were noted by Gustav Hertz in 1887. Hertz observed that under the influence of light, certain surfaces were found to liberate electrons. This photo-emissive effect was put into theory by Max Planck in 1900. He proposed that light of a frequency f contained energy bundles or packets, which he called photons. Furthermore, the energy content of each photon was directly proportional to the light frequency:

$$E = hf, \qquad (1)$$

where E is the photon energy,
h is Planck's constant, and
f is the light frequency.

Planck theorized that a metal had associated with it a work function, or binding energy for free electrons. If a photon could transfer its energy to a free electron, and that energy exceeded the work function, the electron could be liberated from the surface. The presence of an electric field could enhance this by effectively reducing the work function. Einstein extended Planck's findings by showing that the velocity, and hence the momentum of an emitted electron, depended on the work function and the light frequency.

PHOTO EFFECT IN SEMICONDUCTORS

Bulk Crystal

If light of proper wavelength impinges on a semiconductor crystal, the concentration of charge carriers is found to increase. Thus, the crystal conductivity will increase:

$$\sigma = q\,(\mu_e n + \mu_h p), \qquad (2)$$

where σ is the conductivity,
q is the electron charge,
μ_e is the electron mobility,
μ_h is the hole mobility,
n is the electron concentration, and
p is the hole concentration.

The process by which charge-carrier concentration is increased is shown in Figure 1. The band structure of the semiconductor is shown, with an energy gap, or forbidden region, of Eg electron volts. Radiation from two light sources is shown striking the crystal. Light frequency f_1 is sufficiently high that its photon energy, hf_1, is slightly greater than the energy gap. This energy is transferred to a bound electron at site one in the valence band, and the electron is excited to a higher energy level, site one in the conduction band, where it is free to serve as a current carrier. The hole left behind at site one in the valence band is also free to serve as a current carrier.

The photon energy of the lower-frequency light, hf_2, is less than the band gap, and an electron freed from site two in the valence band will rise to a level in the forbidden region, only to release this energy and fall back into the valence band and recombine with a hole at site three.

The above discussion implies that the energy gap, Eg, represents a threshold of response to light. This is true, however, it is not an abrupt threshold. Throughout the photo-excitation process, the law of conservation of mo-

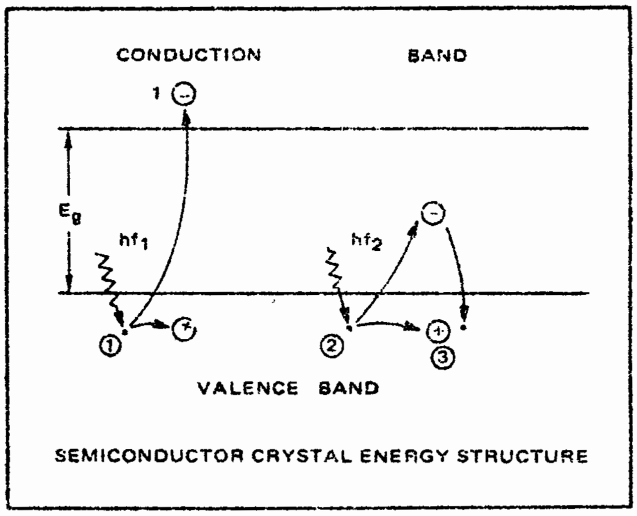

FIGURE 1 – Photoeffect in a Semiconductor

mentum applies. The momentum and density of hole-electron sites are highest at the center of both the valence and conduction bands, and fall to zero at the upper and lower ends of the bands. Therefore, the probability of an excited valence-band electron finding a site of like momentum in the conduction band is greatest at the center of the bands and lowest at the ends of the bands. Consequently, the response of the crystal to the impinging light is found to rise from zero at a photon energy of Eg electron volts, to a peak at some greater energy level, and then to fall to zero again at an energy corresponding to the difference between the bottom of the valence band and the top of the conduction band.

The response is a function of energy, and therefore of frequency, and is often given as a function of reciprocal frequency, or, more precisely, of wave length. An example is shown in Figure 2 for a crystal of cadmium-selenide. On the basis of the information given so far, it would seem reasonable to expect symmetry in such a curve; however, trapping centers and other absorption phenomena affect the shape of the curve[1].

The optical response of a bulk semiconductor can be modified by the addition of impurities. Addition of an acceptor impurity, which will cause the bulk material to become p-type in nature, results in impurity levels which lie somewhat above the top of the valence band. Photoexcitation can occur from these impurity levels to the conduction band, generally resulting in a shifting and reshaping of the spectral response curve. A similar modification of response can be attributed to the donor impurity levels in n-type material.

PN Junctions

If a pn junction is exposed to light of proper frequency, the current flow across the junction will tend to increase. If the junction is forward-biased, the net increase will be relatively insignificant. However, if the junction is reverse-biased, the change will be quite appreciable. Figure 3 shows the photo effect in the junction for a frequency well within the response curve for the device.

Photons create hole-electron pairs in the crystal on both sides of the junction. The transferred energy promotes the electrons into the conduction band, leaving the holes in the valence band. The applied external bias provides an electric field, $\mathcal{E}$, as shown in the figure. Thus the photo-induced electrons in the p-side conduction band will flow down the potential hill at the junction into the n-side and from there to the external circuit. Likewise, holes in the valence band of the n-side will flow across the junction into the p-side where they will add to the external current.

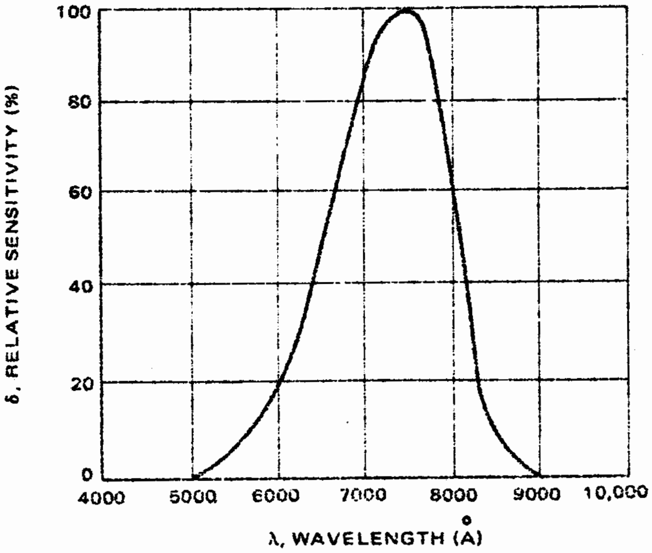

FIGURE 2 – Spectral Response of Cadmium Selenide

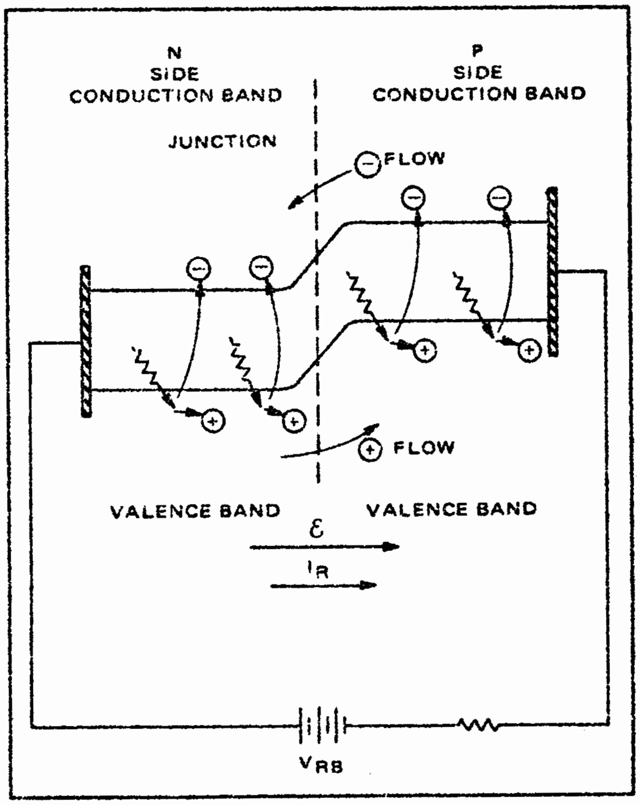

FIGURE 3 – Photo Effect in a Reverse-Biased PN Junction

---

[1] See references for a detailed discussion of these.

Under dark conditions, the current flow through the reverse-biased diode is the reverse saturation current, I_O. This current is relatively independent of the applied voltage (below breakdown) and is basically a result of the thermal generation of hole-electron pairs.

When the junction is illuminated, the energy transferred from photons creates additional hole-electron pairs. The number of hole-electron pairs created is a function of the light intensity.

For example, incident monochromatic radiation of H (watts/cm^2) will provide P photons to the diode:

$$P = \frac{\lambda H}{hc}, \quad (3)$$

where λ is the wavelength of incident light,

h is Planck's constant, and

c is the velocity of light.

The increase in minority carrier density in the diode will depend on P, the conservation of momentum restriction, and the reflectance and transmittance properties of the crystal. Therefore, the photo current, I_λ, is given by

$$I_\lambda = \eta F q A, \quad (4)$$

where η is the quantum efficiency or ratio of current carriers to incident photons,

F is the fraction of incident photons transmitted by the crystal,

q is the charge of an electron, and

A is the diode active area.

Thus, under illuminated conditions, the total current flow is

$$I = I_O + I_\lambda. \quad (5)$$

If I_λ is sufficiently large, I_O can be neglected, and by using the spectral response characteristics and peak spectral sensitivity of the diode, the total current is given approximately by

$$I \approx \delta S_R H, \quad (6)$$

where δ is the relative response and a function of radiant wavelength,

S_R is the peak spectral sensitivity, and

H is the incident radiation.

The spectral response for a silicon photo-diode is given in Figure 4.

Using the above relations, an approximate model of the diode is given in Figure 5. Here, the photo and thermally generated currents are shown as parallel current sources. C represents the capacitance of the reverse-biased junction while G represents the equivalent shunt conductance of the diode and is generally quite small. This model applies only for reverse bias, which, as mentioned above, is the normal mode of operation.

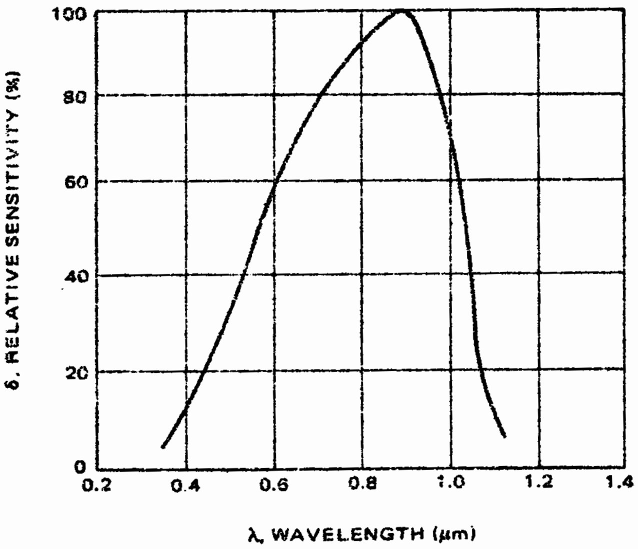

FIGURE 4 – Spectral Response of Silicon Photodiode

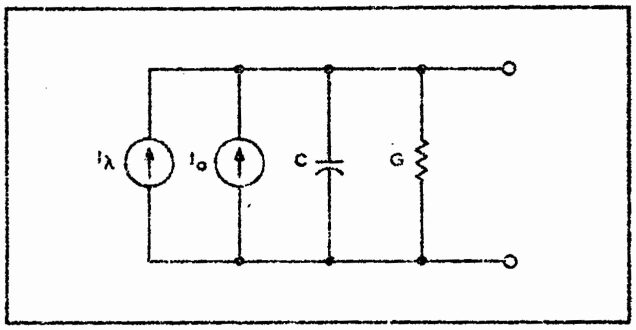

FIGURE 5 – Approximate Model of Photodiode

Photo Transistor

If the pn junction discussed above is made the collector-base diode of a bipolar transistor, the photo-induced current is the transistor base current. The current gain of the transistor will thus result in a collector-emitter current of

$$I_C = (h_{fe} + 1) I_\lambda, \quad (7)$$

where I_C is the collector current,

h_{fe} is the forward current gain, and

I_λ is the photo induced base current.

The base terminal can be left floating, or can be biased up to a desired quiescent level. In either case, the collector-base junction is reverse biased and the diode current is the reverse leakage current. Thus, photo-stimulation will result in a significant increase in diode, or base current, and with current gain will result in a significant increase in collector current.

The energy-band diagram for the photo transistor is shown in Figure 6. The photo-induced base current is returned to the collector through the emitter and the external circuitry. In so doing, electrons are supplied to the base region by the emitter where they are pulled into the collector by the electric field $\mathcal{E}$.

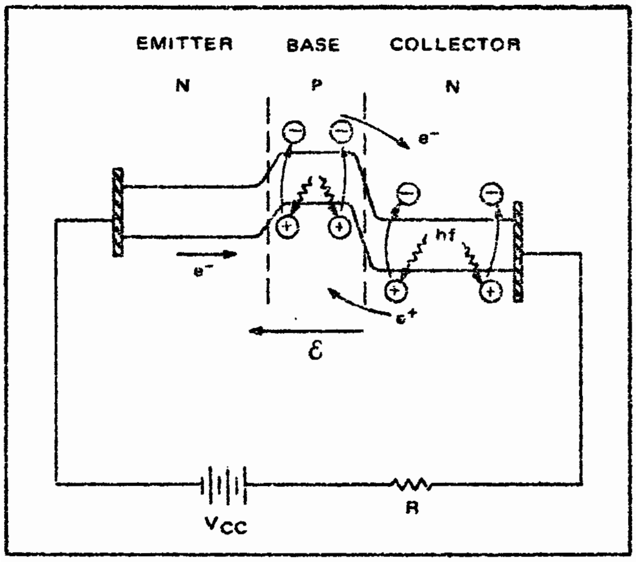

FIGURE 6 – Photoeffect in a Transistor

The model of the photo diode in Figure 5 might also be applied to the phototransistor, however, this would be severely limited in conveying the true characteristics of the transistor. A more useful and accurate model can be obtained by using the hybrid-pi model of the transistor and adding the photo-current generator between collector and base. This model appears in Figure 7.

Assuming a temperature of 25°C, and a radiation source at the wave length of peak response (i.e., $\delta = 1$), the following relations apply:

$$I_\lambda \approx S_{RCBO} \cdot H, \qquad (8a)$$

$$gm = 40\, i_c, \text{ and} \qquad (8b)$$

$$r_{be} = h_{fe}/g_m, \qquad (8c)$$

where S_{RCBO} is the collector-base diode radiation sensitivity with open emitter,

g_m is the forward transconductance,

i_c is the collector current, and

r_{be} is the effective base-emitter resistance.

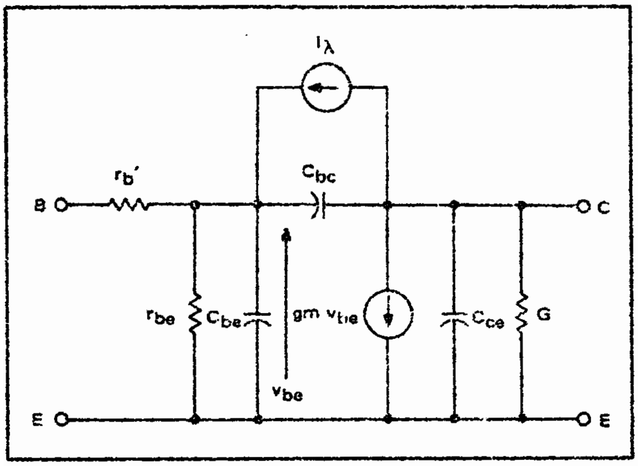

FIGURE 7 – Hybrid-pi Model of Phototransistor

In most cases $r'_b \ll r_{be}$, and can be neglected. The open-base operation is represented in Figure 8. Using this model, a feel for the high-frequency response of the device may be obtained by using the relationship

$$f_t \approx \frac{g_m}{2\pi C_{BE}}, \qquad (9)$$

where f_t is the device current-gain-bandwidth product.

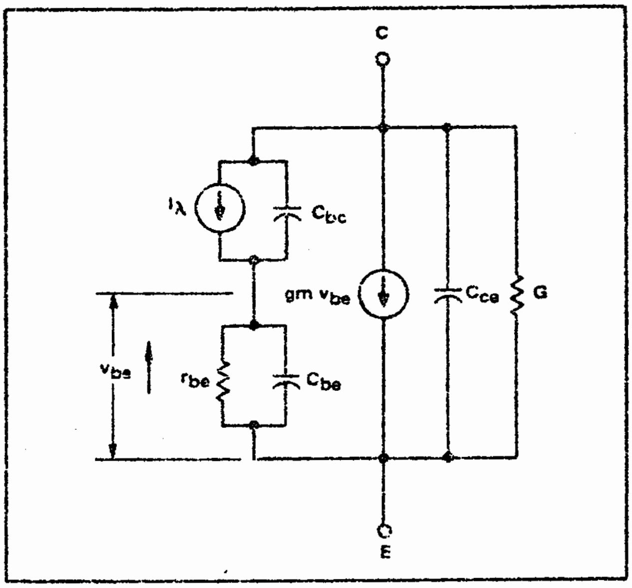

FIGURE 8 – Floating Base Approximate Model of Phototransistor

STATIC ELECTRICAL CHARACTERISTICS OF PHOTOTRANSISTORS

Spectral Response

As mentioned previously, the spectral response curve provides an indication of a device's ability to respond to radiation of different wave lengths. Figure 9 shows the spectral response for constant energy radiation for the Motorola MRD300 phototransistor series. As the figure indicates, peak response is obtained at about 8000 Å (Angstroms), or 0.8 μm.

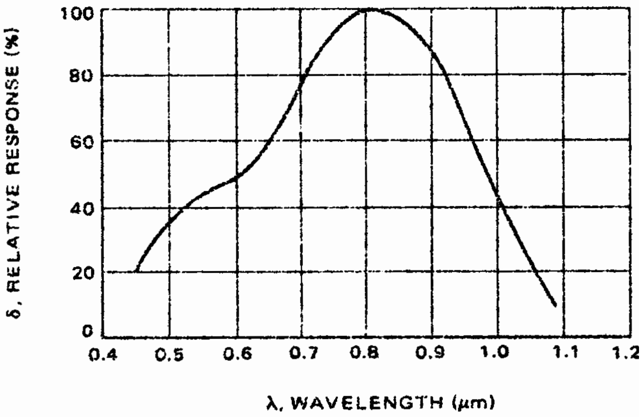

FIGURE 9 – Constant Energy Spectral Response for MRD300

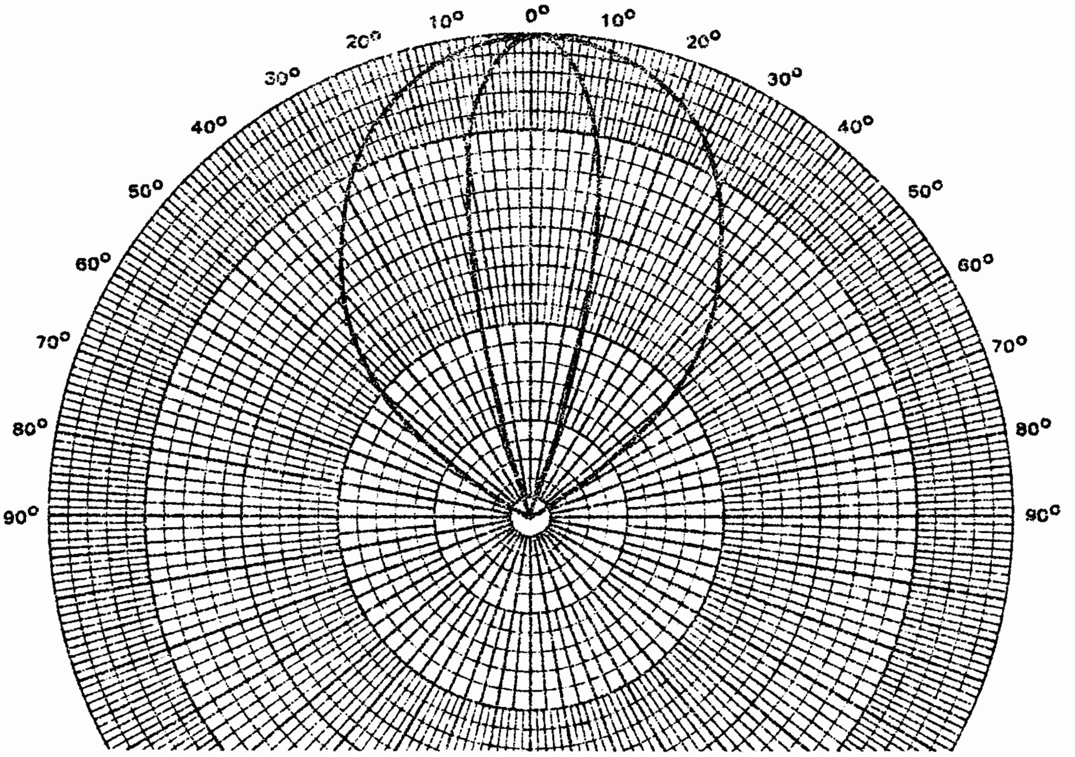

FIGURE 10 – Polar Response of MRD300. Inner Curve with Lens, Outer Curve with Flat Glass.

Angular Alignment

Lambert's law of illumination states that the illumination of a surface is proportional to the cosine of the angle between the normal to the surface and the direction of the radiation. Thus, the angular alignment of a phototransistor and radiation source is quite significant. The cosine proportionately represents an ideal angular response. The presence of an optical lens and the limit of window size further affect the response. This information is best conveyed by a polar plot of the device response. Such a plot in Figure 10 gives the polar response for the MRD300 series.

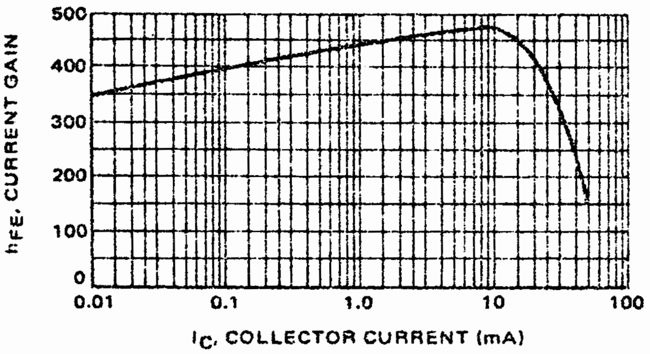

FIGURE 11 – DC Current Gain versus Collector Current

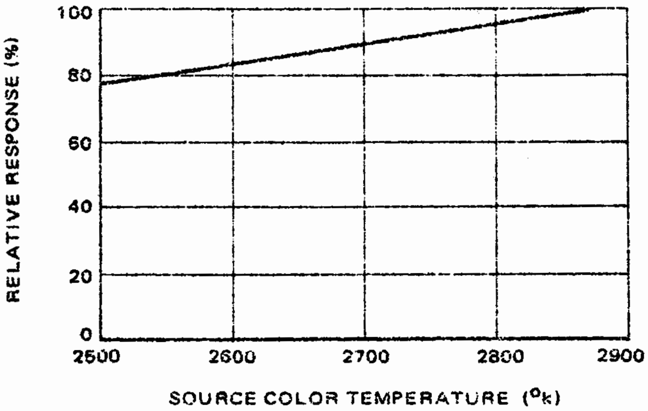

FIGURE 12 – Relative Response of MRD300 versus Color Temperature

DC Current Gain

The sensitivity of a photo transistor is a function of the collector-base diode quantum efficiency and also of the dc current gain of the transistor. Therefore, the overall sensitivity is a function of collector current. Figure 11 shows the collector current dependence of dc current gain.

Color Temperature Response

In many instances, a photo transistor is used with a broad band source of radiation, such as an incandescent lamp. The response of the photo transistor is therefore dependent on the source color temperature. Incandescent sources are normally operated at a color temperature of 2870°K, but, lower-color-temperature operation is not uncommon. It therefore becomes desirable to know the result of a color temperature difference on the photo sensitivity. Figure 12 shows the relative response of the MRD300 series as a function of color temperature.

Temperature Coefficient of Ip

A number of applications call for the use of phototransistors in temperature environments other than normal room temperature. The variation in photo current with temperature changes is approximately linear with a positive slope of about 0.667%/°C.

The magnitude of this temperature coefficient is primarily a result of the increase in h_{FE} versus temperature, since the collector-base photo current temperature coefficient is only about 0.1%/°C.

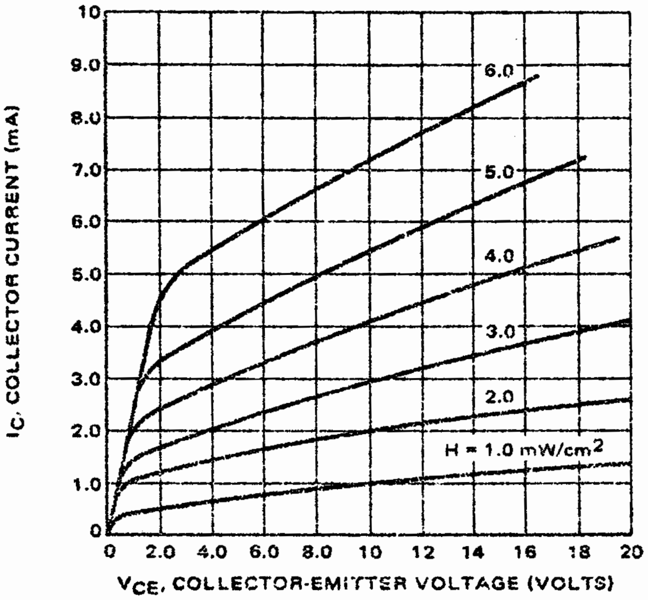

FIGURE 13 – Collector Characteristics for MRD300

Collector Characteristics

Since the collector current is primarily a function of impinging radiation, the effect of collector-emitter voltage, below breakdown, is small. Therefore, a plot of the $I_C - V_{CE}$ characteristics with impinging radiation as a parameter, are very similar to the same characteristics with I_B as a parameter. The collector family for the MRD300 series appears in Figure 13.

Radiation Sensitivity

The capability of a given phototransistor to serve in a given application is quite often dependent on the radiation sensitivity of the device. The open-base radiation sensitivity for the MRD300 series is given in Figure 14. This indicates that the sensitivity is approximately linear with respect to impinging radiation. The additional capability of the MRD300 to be pre-biased gives rise to interest in the sensitivity as a function of equivalent base resistance. Figure 15 gives this relationship.

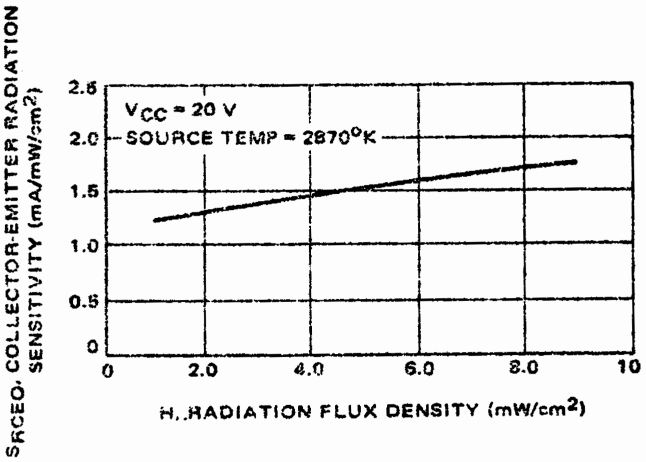

FIGURE 14 – Open Base Sensitivity versus Radiation for MRD300

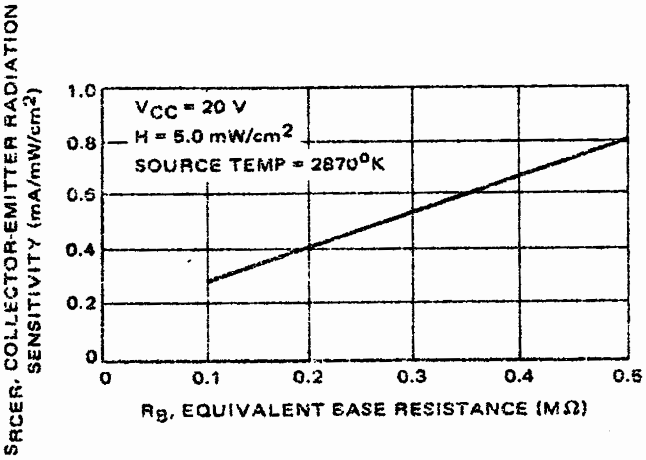

FIGURE 15 – Effect of Base Resistance on Sensitivity of MRD300

Capacitance

Junction capacitance is the significant parameter in determining the high frequency capability and switching speed of a transistor. The junction capacitances of the MRD300 as a function of junction voltages are given in Figure 16.

DYNAMIC CHARACTERISTICS OF PHOTOTRANSISTORS

Linearity

The variation of h_{FE} with respect to collector current results in a non-linear response of the photo transistor over

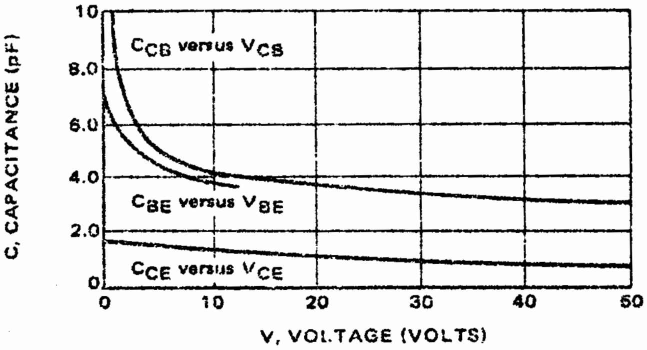

FIGURE 16 – Junction Capacitances versus Voltage for MRD300

large signal swings. However, the small-signal response is approximately linear. The use of a load line on the collector characteristic of Figure 13 will indicate the degree of linearity to be expected for a specific range of optical drive.

Frequency Response

The phototransistor frequency response, as referred to in the discussion of Figures 7 and 8, is presented in Figure 17. The device response is flat down to dc with the rolloff frequency dependent on the load impedance as well as on the device. The response is given in Figure 17 as the 3-dB frequency as a function of load impedance for two values of collector current.

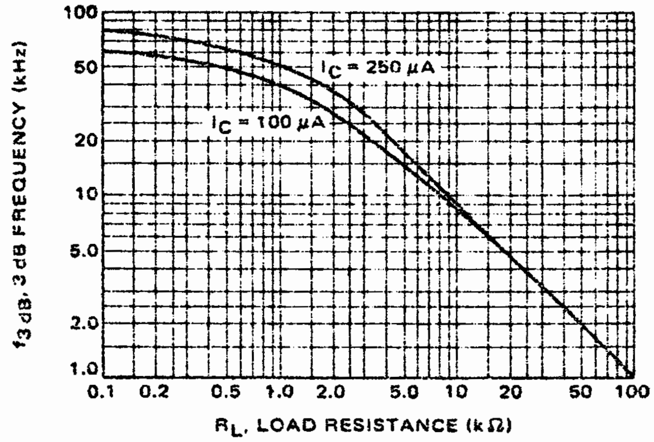

FIGURE 17 – 3 dB Frequency versus Load Resistance for MRD300

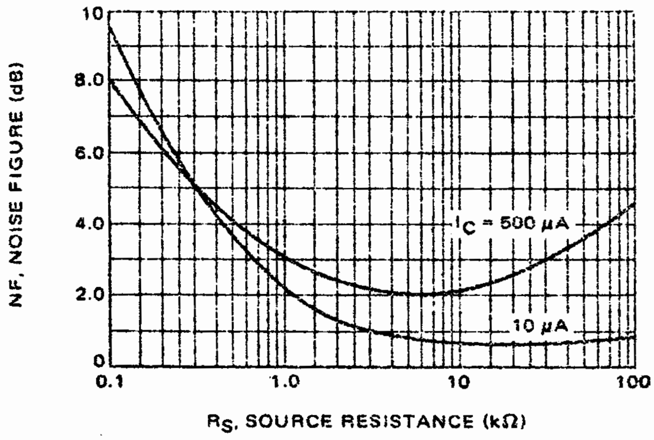

FIGURE 18 – MRD300 Noise Figure versus Source Resistance

Noise Figure

Although the usual operation of the phototransistor is in the floating base mode, a good qualitative feel for the device's noise characteristic can be obtained by measuring noise figure under standard conditions. The 1 kHz noise figure for the MRD300 is shown in Figure 18.

Small Signal h Parameters

As with noise figure, the small-signal h-parameters, measured under standard conditions, give a qualitative feel for the device behavior. These are given as functions of collector current in Figure 19. With this information, the device can be analyzed in the standard hybrid model of Figure 20(a); by use of the conversions of Table I, the equivalent r-parameter model of Figure 20(b) can be used.

TABLE I – Parameter Conversions

$$h_{fb} = \frac{h_{fe}}{1 + h_{fe}}$$

$$r_c = \frac{h_{fe} + 1}{h_{oe}}$$

$$r_e = \frac{h_{re}}{h_{oe}}$$

$$r_b = h_{ie} - \frac{h_{re}\,(1 + h_{fe})}{h_{oe}}$$

SWITCHING CHARACTERISTICS OF PHOTOTRANSISTORS

In switching applications, two important requirements of a transistor are:

(1) speed
(2) ON voltage

Since some optical drives for phototransistors can provide fast light pulses, the same two considerations apply.

Switching Speed

If reference is made to the model of Figure 8, it can be seen that a fast rise in the current I_λ will not result in an equivalent instantaneous increase in collector-emitter current. The initial flow of I_λ must supply charging current to C_{CB} and C_{BE}. Once these capacitances have been charged, I_λ will flow through r_{bc}. Then the current generator, $g_m \cdot v_{be}$, will begin to supply current. During turn-off, a similar situation occurs. Although I_λ may instantaneously drop to zero, the discharge of C_{CB} and C_{BE} through r_{be} will maintain a current flow through the collector. When the capacitances have been discharged, V_{be} will fall to zero and the current, $g_m \cdot V_{be}$, will likewise drop to zero. (This discussion assumes negligible leakage currents). These capacitances therefore result in turn-on and turn-off delays, and in rise and fall times for switching applications just as found in conventional bipolar switching transistors. And, just as with conventional switching, the times are a function of drive. Figure 21 shows the collector current (or drive) dependence of the turn-on delay and rise times. As indicated the delay time is dependent on the device only; whereas the rise-time is dependent on both the device and the load.

If a high-intensity source, such as a xenon flash lamp, is used for the optical drive, the device becomes optically saturated unless large optical attenuation is placed between source and detector. This can result in a significant storage time during the turn off, especially in the floating-base mode since stored charge has no direct path out of the

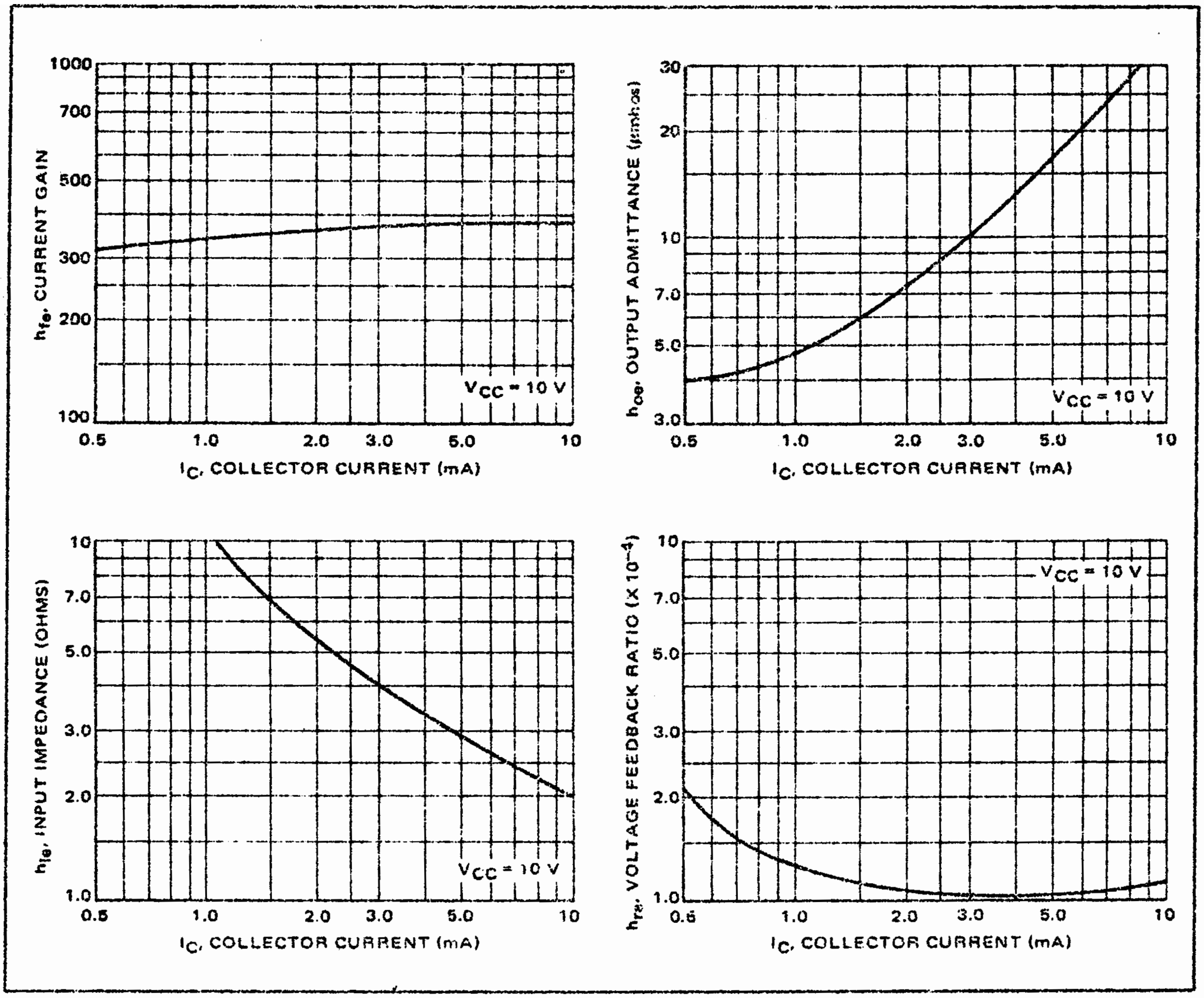

FIGURE 19 — 1 kHz h-Parameters versus Collector Current for MRD300

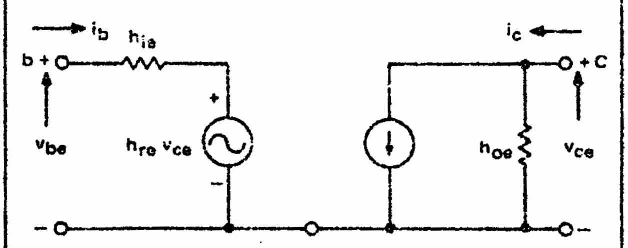

(a) Hybrid Model

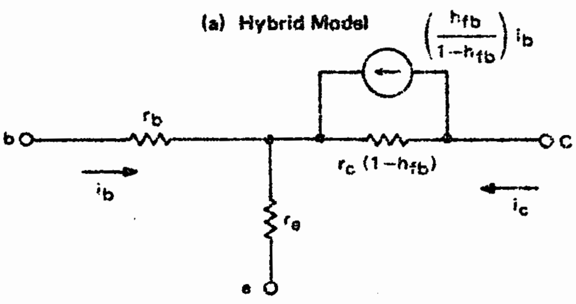

(b) r-Parameter Model

FIGURE 20 — Low Frequency Analytical Models of Phototransistor Without Photo Current Generator

base region. However, if a non-saturating source, such as a GaAs diode, is used for switching drive, the storage, or turn-off delay time is quite low as shown in Figure 22.

Saturation Voltage

An ideal switch has zero ON impedance, or an ON voltage drop of zero. The ON saturation voltage of the MRD300 is relatively low, approximately 0.2 volts. For a given collector current, the ON voltage is a function of drive, and is shown in Figure 23.

APPLICATIONS OF PHOTOTRANSISTORS

As mentioned previously, the phototransistor can be used in a wide variety of applications. Figure 24 shows two phototransistors in a series-shunt chopper circuit. As Q_1 is switched ON, Q_2 is OFF, and when Q_1 is switched OFF, Q_2 is driven ON.

Logic circuitry featuring the high input/output electrical isolation of photo transistors is shown in Figure 25.

Figure 26 shows a linear application of the phototransistor. As mentioned previously, the linearity is obtained for small-signal swings.

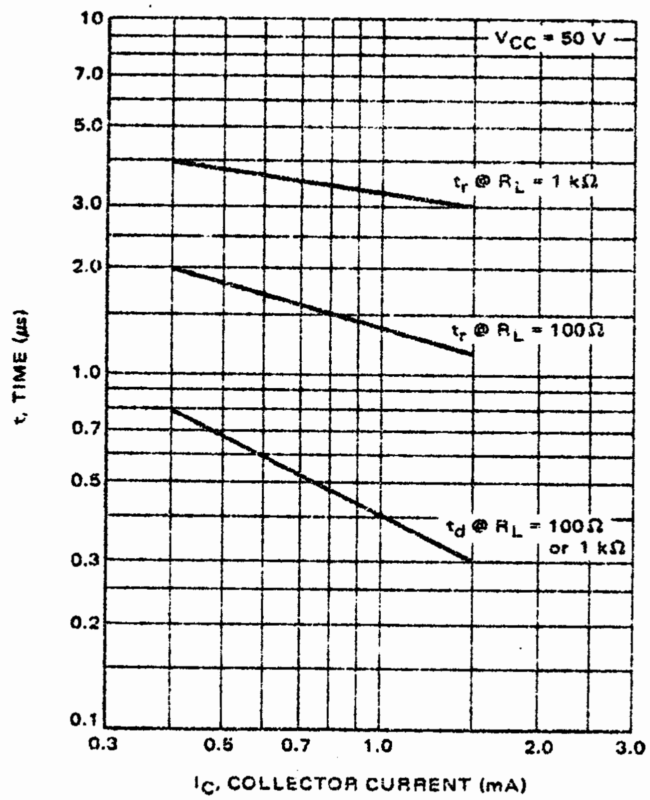

FIGURE 21 – Switching Delay and Rise Times for MRD300

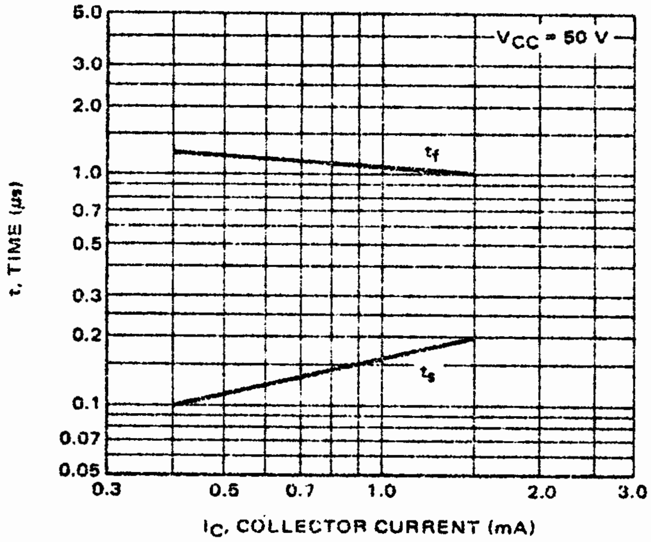

FIGURE 22 – Switching Storage and Fall Times for MRD300

A double-pole, single-throw relay is shown in Figure 27.

In general, the phototransistor can be used in counting circuitry, level indications, alarm circuits, tachometers, and various process controls.

Conclusion

The phototransistor is a light-sensitive active device of moderately high sensitivity and relatively high speed. Its response is both a function of light intensity and wavelength, and behaves basically like a standard bipolar transistor with an externally controlled collector-base leakage current.

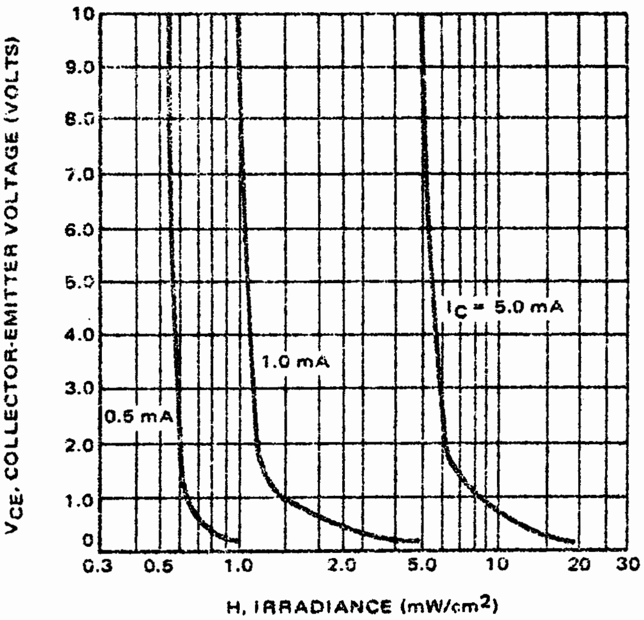

FIGURE 23 – Collector Emitter Saturation Voltage as a Function of Irradiance for MRD300

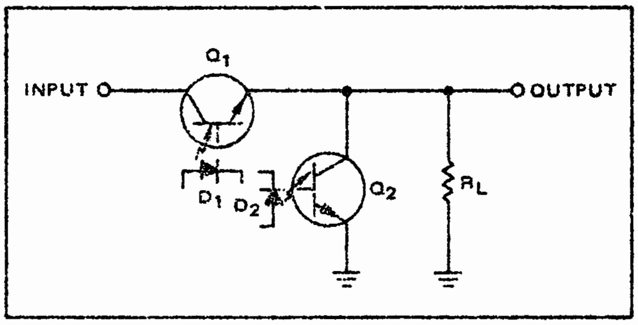

FIGURE 24 – Series-Shunt Chopper Circuit Using MRD300 Phototransistors and GaAs Light Emitting Diodes (LEDs)

APPENDIX I

Radiant energy covers a broad band of the electromagnetic spectrum. A relatively small segment of the band is the spectrum of visible light. A portion of the electromagnetic spectrum including the range of visible light is shown in Figure I-1.

The portion of radiant flux, or radiant energy emitted per unit time, which is visible is referred to as luminous flux. This distinction is due to the inability of the eye to respond equally to like power levels of different visible wavelengths. For example, if two light sources, one green and one blue are both emitting like wattage, the eye will perceive the green light as being much brighter than the blue. Consequently, when speaking of visible light of varying color, the watt becomes a poor measure of brightness. A more meaningful unit is the lumen. In order to obtain a clear understanding of the lumen, two other definitions are required.

The first of these is the standard source (Fig. I-2). The standard source, adopted by international agreement, con-

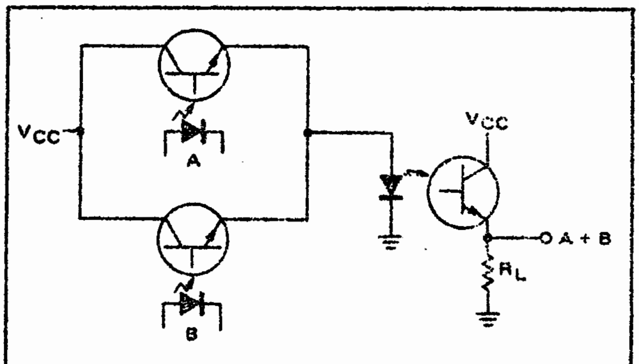

HIGH ISOLATION OR GATE

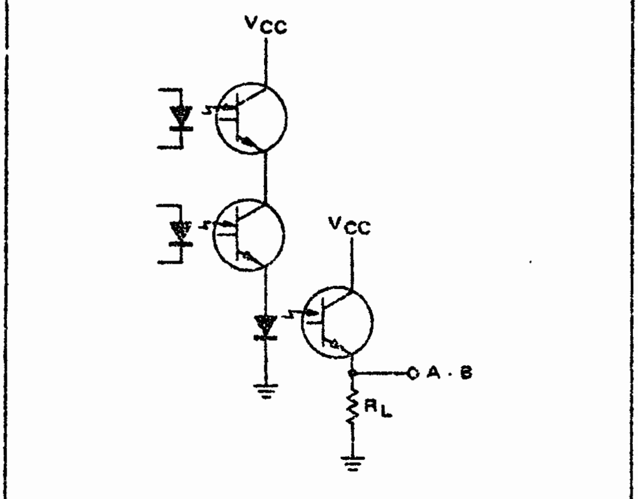

HIGH ISOLATION AND GATE

FIGURE 25 – Logic Circuits Using the MRD300 and LEDs

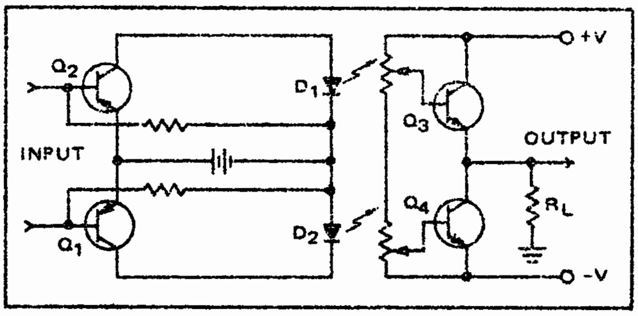

FIGURE 26 – Small Signal Linear Amplifier Using MRD300 and LEDs

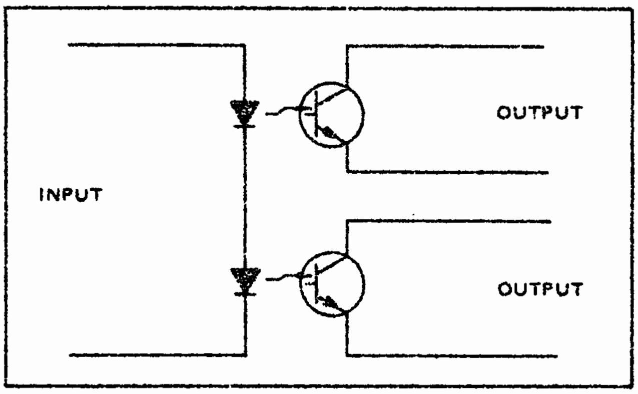

FIGURE 27 – DPST Relay Using MRD300s and LEDs

sists of a segment of fused thoria immersed in a chamber of platinum. When the platinum is at its melting point, the light emitted from the chamber approximates the radiation of a black body. The luminous flux emitted by the source is dependent on the aperture and cone of radiation. The cone of radiation is measured in terms of the solid angle.

The concept of a solid angle comes from spherical geometry. If a point is enclosed by a spherical surface and a set of radial lines define an area on the surface, the radial lines also subtend a solid angle. This angle, ω, is shown in Figure I-3, and is defined as

$$\omega = \frac{A}{r^2}, \qquad \text{(I-1)}$$

where A is the described area and r is the spherical radius.

If the area A is equal to r^2, then the solid angle subtended is one unit solid angle or one steradian, which is nothing more than the three-dimensional equivalent of a radian.

With the standard source and unit solid angle established, the lumen can be defined.

A lumen is the luminous flux emitted from a standard source and included within one steradian.

Using the concept of the lumen, it is now possible to define other terms of illumination.

Illuminance

If a differential amount of luminous flux, dF, is impinging on a differential area, dA, the illuminance, E, is given by

$$E = \frac{dF}{dA}. \qquad \text{(I-2)}$$

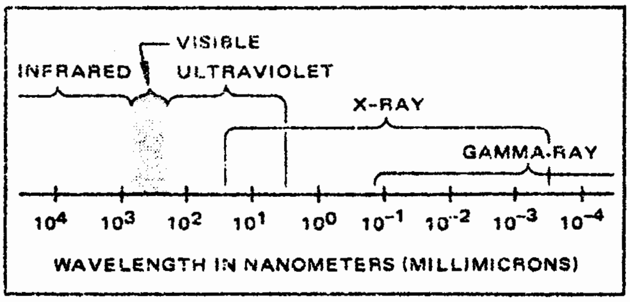

FIGURE I–1 – Portion of Electromagnetic Spectrum

Illuminance is most often expressed in lumens per square foot, or foot-candles. If the illuminance is constant over the area, (I-2) becomes

$$E = F/A. \qquad \text{(I-3)}$$

Luminous Intensity

When the differential flux, dF, is emitted through a differential solid angle, dω, the luminous intensity, I, is given by

$$I = \frac{dF}{d\omega}. \qquad \text{(I-4)}$$

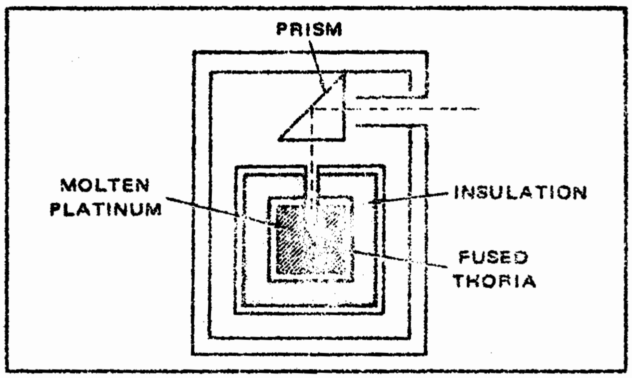

FIGURE I–2 – International Standard Source

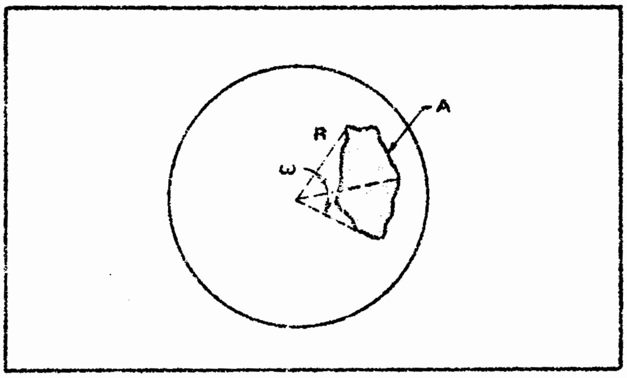

FIGURE I–3 – Solid Angle, ω

Luminous intensity is most often expressed in lumens per steradian or candela. If the luminous intensity is constant with respect to the angle of emission, (I-4) becomes:

$$I = \frac{F}{\omega}. \qquad \text{(I-5)}$$

If the wavelength of visible radiation is varied, but the illumination is held constant, the radiative power in watts will be found to vary. This again illustrates the poor quality of the watt as a measure of illumination. A relation between illumination and radiative power must then be specified at a particular frequency. The point of specification has been taken to be at a wavelength of 0.555 μm, which is the peak of spectral response of the human eye. At this wavelength, 1 watt of radiative power is equivalent to 680 lumens.

APPENDIX II
OPTOELECTRONIC DEFINITIONS

F, Luminous Flux: Radiant flux of wavelength within the band of visible light.

Lumen: The luminous flux emitted from a standard source and included within one steradian (solid angle equivalent of a radian).

H, Radiation Flux Density (Irradiance): The total incident radiation energy measured in power per unit area (e.g., mW/cm^2).

E, Luminous Flux Density (Illuminance): Radiation flux density of wavelength within the band of visible light. Measured in lumens/ft^2 or foot candles. At the wavelength of peak response of the human eye. 0.555 μm (0.555×10^{-6}m). 1 watt of radiative power is equivalent to 680 lumens.

S_R, Radiation Sensitivity: The ratio of photo-induced current to incident radiant energy, the latter measured at the plane of the lens of the photo device.

S_I, Illumination Sensitivity: The ratio of photo-induced current to incident luminous energy, the latter measured at the plane of the lens of the photo device.

Spectral Response: Sensitivity as a function of wavelength of incident energy. Usually normalized to peak sensitivity.

Constants

Planck's constant: $h = 4.13 \times 10^{-15}$ eV-s.
electron charge: $q = 1.60 \times 10^{-19}$ coulomb.
velocity of light: $c = 3 \times 10^{8}$ m/s.

Illumination Conversion Factors

Multiply	By	To Obtain
lumens/ft^2	1	ft. candles
lumens/ft^2*	1.58×10^{-3}	mW/cm^2
candlepower	4π	lumens

*At 0.555 μm.

BIBLIOGRAPHY AND REFERENCES

1. Fitchen, Franklin C., Transistor Circuit Analysis and Design, D. Van Nostrand Company, Inc., Princeton 1962.
2. Hunter, Lloyd P., ed., Handbook of Semiconductor Electronics, Sect 5., McGraw-Hill Book Co., Inc., New York 1962.
3. Jordan, A.G. and A.G. Milnes, "Photoeffect on Diffused PN Junctions with Integral Field Gradients", IRE Transactions on Electron Devices, October 1960.
4. Millman, Jacob, Vacuum-tube and Semiconductor Electronics, McGraw-Hill Book Co., Inc., New York 1958.
5. Sah, C.T., "Effect of Surface Recombination and Channel on PN Junction and Transistor Characteristics", IRE Transactions on Electron Devices, January 1962.
6. Sears, F.W. and M.W. Zemansky, University Physics, Addison-Wesley Publishing Co., Inc., Reading, Massachusetts 1962.
7. Shockley, William, Electrons and Holes in Semiconductors, D. Van Nostrand Company, Inc., Princeton 1955.

MOTOROLA Semiconductor Products Inc.
BOX 20912 • PHOENIX, ARIZONA 85036 • A SUBSIDIARY OF MOTOROLA INC.

4247 PRINTED IN USA 11-68 IMPERIAL LITHO 88729 30M
CODE 17.2-90 AN 440

BY FORREST M. MIMS

TALK OVER A SUNBEAM WITH A "PHOTOPHONE"

Modernized version of Alexander Graham Bell's sunlight communicator provides some 1880 electronics nostalgia—that works.

A LITTLE-KNOWN fact about the inventor of the telephone is that Alexander Graham Bell considered an electro-optical communicator he called a "Photophone" to be his greatest invention, greater even than his telephone. In 1880, Bell and Sumner Tainter communicated by voice over a beam of reflected sunlight. This was 19 years before A. Frederick Collins conducted the first feeble voice transmissions over a distance of three blocks in Narberth, Pennsylvania. So, the first "wireless" voice transmissions were *not* by radio, as history would have us believe.

Compared to the power-hungry radiotelephone medium developed 25 years after Bell's discovery, the Photophone was an elegantly simple technological marvel.

Bell and Tainter succeeded in developing more than 50 ways of voice-modulating a beam of light, including variable-polarization schemes used today in sophisticated laser communication systems.

Photophone Details. The simplest of Bell's and Tainter's modulators consisted of a small flat mirror cemented to a hollow cylinder. Voice energy directed into the open end of the cylinder caused the surface of the mirror to flex in step with the speech patterns. By shining a continuous beam of light onto the mirror's surface, a variable beam impressed with the voice modulation was produced.

Most of the light-beam receivers used with the Photophone employed selenium detectors. (In 1873, it was discovered that the resistance of bulk selenium changed in response to varying light intensity.) It was after Bell had read about selenium experiments that, in 1878, he conceived his Photophone idea.

One of Bell's detectors consisted of a circular array, while another consisted of a cylindrical array of selenium cells. The first was designed to be used with a collector lens, while the latter was designed to be used with a parabolic reflector. Both detectors were connected in series with a battery and a telephone receiver to make up the receiving equipment for the Photophone.

On April 1, 1880, Tainter voice-modulated a beam of sunlight from a mirror and talked to Bell over a 699-ft (213-m) range. After this, Bell made optimistic predictions about the future of his Photophone, none of which materialized during his lifetime. In fact, shortly after Bell's death, in 1921, the Photophone was used mainly in a few military applications. Bell was criticized and even mocked for his opinions and predictions. Today, as we are poised on the threshold of large-scale light-beam communication, the inventor has been vindicated. In short, his predictions after all these years are finally materializing.

Build a Photophone. Bell's sunlight communication experiments can easily be bettered and duplicated with modern solar cells and audio amplifier modules. You can start with Bell's simple mirror-and-cylinder transmitter. An excellent choice for this purpose is the $1.65 Cat. No. 30,626 mirror from Edmund Scientific Co. (300 Edscorp Bldg., Barrington, NJ 08007). This mirror measures 25 mm in diameter and nicely mates with a 1" (25.4-mm) diameter tube.

Cut the tube to a length of about 2″ (50.8-mm). Then, use white glue to cement the mirror to one end of the tube. Make certain that the aluminized surface of the mirror is facing outward to obtain best results. (You can determine which is the mirror's aluminized surface by touching both surfaces with the point of a pencil and observing the reflections. The side that shows *no* gap between the real and image points is the aluminized surface of the mirror.) True, the uncoated surface of the mirror is more resistant to scratches and abrasion, but if this surface faced outward, 5% less light would be reflected, which means you would have a shorter communication range.

The Photophone receiver can be as simple as a single silicon solar cell connected across the input of an inexpensive audio amplifier module (see Fig. 1). Of course, the larger the active area of the cell the better the results.

A convenient housing for a basic receiver can be had by modifying a flashlight, such as the Burgess "Dolphin." This flashlight's built-in reflector is an ideal place for mounting a pair of solar cells because it would reflect far more light onto the cells than would be possible if the cells were used by themselves.

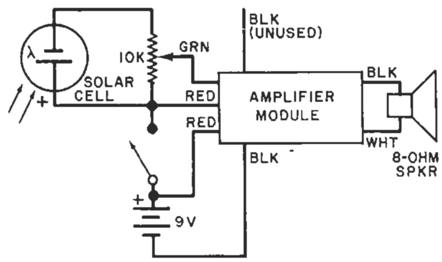

Fig. 1. Schematic diagram of a simple Photophone receiver.

BILL OF MATERIALS

Transmitter:
1—25-mm diameter mirror (see text)
1—2″-3″ length of 1″ outer-diameter rigid tubing
White glue

Receiver
1—16″ diameter parabolic mirror (see text)
1—Audio amplifier module (Radio Shack No. 277-1240 or similar)
1—Miniature 8-ohm loudspeaker
1—10,000-ohm potentiometer with spst switch
1—2 × 2-cm silicon solar cell
1—9-volt battery
1—Miniature phone plug and jack
1—17″ × 17″ piece of ½″ plywood (rear panel)
2—17″ × 3″ pieces of ½″ plywood (side panels)
2—16″ × 3″ pieces of ½″ plywood (top and bottom panels)
2—3″ lengths of ¾″ × ¾″ pine (cabinet feet)
2—3″ × 1½″ pieces of ½″ plywood (door legs)
1—12″ length of 1½″ × ⅜″ piece of hardwood lumber (detector arm)
1—3″ length of 1½″ × ⅜″ piece of hardwood lumber (detector arm)
1—1½″ length of 1½″ × ⅜″ piece of hardwood lumber (detector arm)
1—6″ length of 1″ × 1″ pine (door-opener block and mirror retainers)
1—16″ length of ¼″-diameter hardwood dowel (door opener and solar cell)
5—Metal hinges (doors and detector arm)
1—Drawer pull (cabinet handle)
1—Hasp and lock or hook and eye
Misc.—Flat black and white enamel paint; resilient foamed plastic; white glue; #6 machine hardware; 1″ finishing nails; vinyl electrical tape; battery clip and battery holder; metal spacers (4); stranded hookup wire; solder; etc.

Mount two solar cells, back-to-back and connected in series with each other, by their leads with their plane lying along the axis of the reflector. Focus the detector by adjusting the mounting leads while observing their reflections. When the dark surfaces of the two cells fill the entire area in the reflection, the cell detector is properly aligned.

Getting Greater Range. The Photophone receiver described above will have a range of up to 550′ (168 m). For really long-range communication by sunlight, you can use a large Fresnel lens or parabolic mirror to increase the optical gain of the receiver's detector. A 16″ (40.2-cm) reflector—complete with detector, amplifier, battery, and loudspeaker—is shown in a plywood cabinet in Fig. 2. This receiver can pick up good-quality voice and music from as far away as a half mile. Increasing the transmitter's mirror as well, will increase the communication range even more.

You can duplicate this receiver by following the construction details given in Figs. 3 and 4. Make the cabinet from ½″ (1.27-cm) thick plywood, but don't install the doors until later. Paint all inside surfaces of the cabinet flat black and all outside surfaces white enamel. The black in the interior reduces stray light reflections, while the white exterior makes for good visibility during alignment.

The 16″ parabolic mirror is available from Edmund Scientific for $14.25 as Cat. No. 80,097. It is aluminized on its rear surface, which prevents it from being a perfect reflector. But its ½″ circle of reflected light at the focal point is about the same size as the photocell, which at least partially makes up for the shortcoming.

Four wood retainers hold the mirror in place inside the cabinet. After cutting these retainers to size, use white glue to cement strips of resilient foamed plastic along one entire narrow face of each. Then, while the glue is setting, locate and drill the mounting holes for the retainers. By this time, the glue should have set. Paint each retainer block—not the foamed plastic—flat black and let them dry.

Meanwhile, mount a pair of pine legs on the bottom of the cabinet. Install the carrying handle on the top of the cabinet, and use white glue to cement a 1″-square piece of resilient foamed plastic in the center of the inside rear wall of the box.

Mount the hinges on the cabinet's doors. Carefully align the doors with the front edges of the side, top, and bottom panels, and mark the locations of the remaining hinge holes. Remove and set aside the doors and drill the holes at the points indicated.

Now, lifting the mirror only by its edges, carefully position it in the cabinet. Mount the four retainer blocks in place with their foamed surfaces against the mirror's edge. The foamed plastic should be lightly compressed, holding the mirror firmly but gently in place, when all four retainers are fastened down with machine hardware. Once the mirror is in place, exercise care when working around it. Always place a thick bath towel or a blanket over the mirror when you are working on the cabinet.

The detector used in this receiver should be a single 2 × 2-cm silicon solar cell mounted at the end of a hardwood dowel (see Fig. 4) that plugs into a two-section arm made from

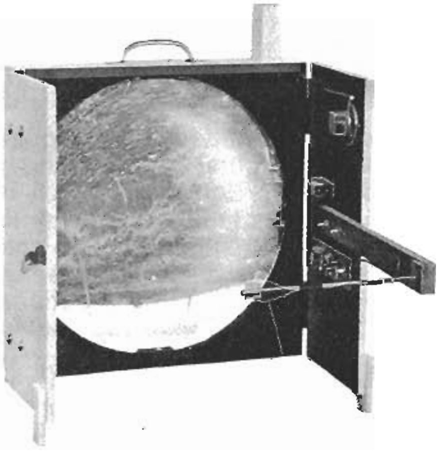

Fig. 2. This receiver can pick up good signals as far as ½ mile.

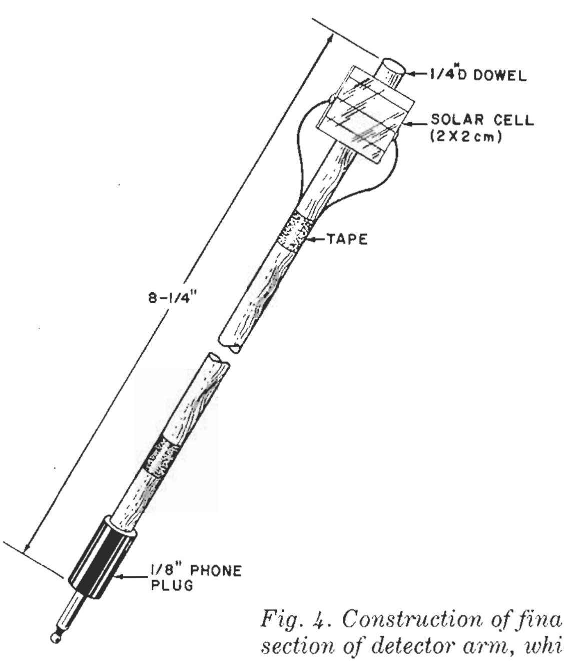

Fig. 4. Construction of final section of detector arm, which is folded to permit door closing.

hardwood stock and hinged at the joint. (The arm is in two sections so that it can be folded to permit the doors to close without obstruction.)

Strike a pencil line down the length of the long arm section, centering it on the wide side. Then strike cross lines 1" from one end, and three more lines spaced 1¼" (32 mm), 2" (51 mm), and 3¼" (83 mm) from the first cross line. At each line crossing, drill a 3/16" (4.76-mm) hole through the wood. Then use a router, coping saw, or wood chisel to remove all the wood between the first and second and third and fourth holes, making the slots only as wide as the diameter of the original holes.

Butt together the two arm pieces as shown and mount a small hinge at the joint. Use glue and finishing nails to mount a square wood block at the free end of the short arm section. Paint the entire arm assembly flat black. When the paint has dried, drill a hole through the block and arm section, connect 12" (30-cm) lengths of stranded hookup wire to the lugs of a miniature phone jack, and mount the jack in the hole.

After painting an 8¼" long by ¼" diameter (21 cm × 6.35 mm) hardwood dowel flat black and allowing it to dry, mount the 2 × 2-cm silicon solar cell at one end with white glue. Solder stranded hookup wires to the cell's contacts at one end, and connect and solder the free ends of the wires to the lugs on a miniature phone plug. Cut a groove in the side of the dowel to permit the plug's plastic cap to slide over the wire leads. Remove enough wood from the dowel at the end opposite the cell to permit it to be force-fitted into the end of the plug's cap. With a little care, the dowel will be locked into place when the cap is screwed onto the plug. Use black electrical tape to bind the wires to the dowel in a couple of places.

Mount the dowel-and-block assembly that holds the door open at the top of the right door. Position it so that it will not interfere with door closure, and use glue and finishing nails, the latter driven through the door panel into the block. Make sure the nails do not interfere with free movement of the dowel and the dowel moves freely in the block.

Locate and drill the holes for the detector arm as follows: First, strike a line across the panel midway between the top and bottom of the panel. Mount the door on the cabinet via its hinges. Slide the dowel in the block forward to lock the door open. Direct a strong beam of light on the mirror's surface. Now, plug the detector dowel assembly into the arm assembly and place the arm against the door panel. Center the slots in the arm over the line on the door. Standing out of the way of the light beam, move the arm closer to or farther from the mirror until the reflected light from the mirror just fills the detector cell's active surface area. Indicate on the door panel's line the points that mark the centers of the slots in the arm. Remove the arm, unplug the detector dowel assembly, and set both aside. Finally, drill a hole at each location indicated. Make the holes just large emough to require that you use a screwdriver to drive a pair of No. 6 × 1½" screws into the holes.

Remove the door panel from the cabinet. Mount plywood legs on the front of both door panels. Then paint the panels, flat black on their inside surfaces and white enamel on their outside surfaces. When the paint has thoroughly dried, drill perforations for the speaker grille, and mount the speaker on the inside of the panel. Use a metal L bracket for the switched potentiometer and spacers for the

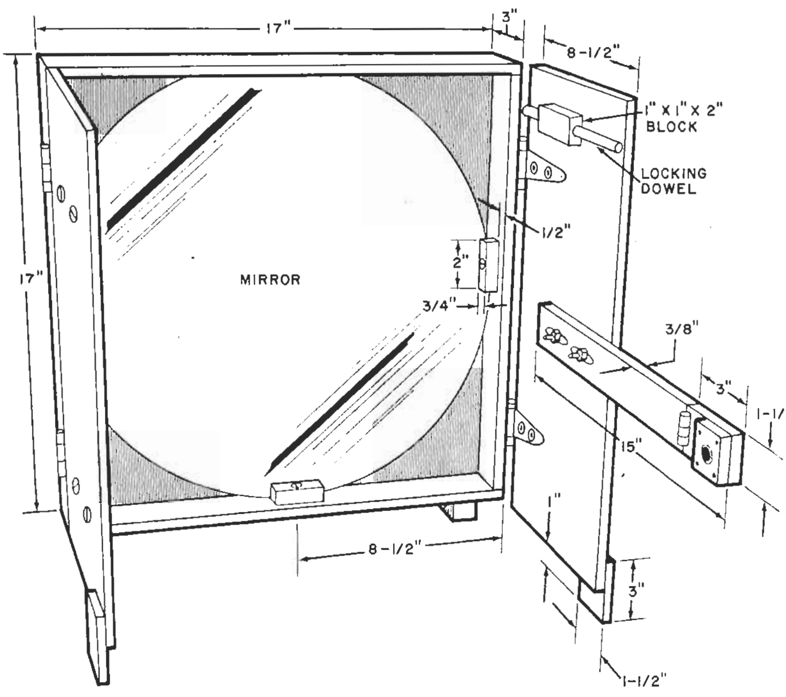

Fig. 3. Dimensions of the plywood cabinet for the Photophone. Mirror is held in place by wood blocks.

amplifier module when mounting them in place. Then refer back to Fig. 1 and interconnect all components.

Anchor the detector arm to the door with large flat washers and wing nuts. (The wing nuts will facilitate easy focusing of the receiver during field operation.) Bolt the doors to the cabinet with No. 6 machine hardware. Use large flat washers under all screw heads and nuts. Finally, install a hook and eye or lock and hasp on the doors to keep them closed when the receiver is not in use.

Range Testing. Start your testing by fastening the transmitter mirror assembly directly over the speaker of a small portable radio receiver. Aim the beam from the transmitter down a range of several thousand feet where it will not be obstructed. Take the receiver several hundred feet downrange and align its mirror with the transmitter's reflected beam. Plug the detector dowel assembly into the arm on the door and adjust the focusing for the best possible received signal. With proper beam alignment and receiver focusing, you should be able to hear good-quality voice and music.

Continue to move the receiver away from the transmitter and make reception tests every 50′ (15 m) or 100′ (30 m) until the signal becomes too weak to "copy." Bear in mind that the earth's rotation will cause the sunlight reflected from the transmitter's mirror to move away from your original alignment point. So, you will occasionally have to adjust the transmitter's orientation to assure proper receiver/transmitter alignment. It helps if you can recruit one or two friends for the alignment procedure as distances can become quite great.

The maximum range of your system is dependent on the areas of the transmitter's and receiver's mirrors, overall gain of the receiver's amplifier, atmospheric condition, and angle of the sun in the sky. The last is of particular importance because high angles yield far more light intensity than do low angles. Offsetting this is the fact that at high angles, less of the transmitter's mirror surface is utilized that an the lower angles. Consequently, there is no way of predicting, with absolute assurance, what the range of your system will actually be.

Some Modifications. The Photophone can be modified in a number of ways to make it perform better. For example, you can increase sensitivity by using light shields and baffles to cut out extraneous light reflections, or you can use a preamplifier to boost the signal level from the solar cell. A large Fresnel lens can also considerably improve receiver operation. Edmund Scientific's No. 70,717 ($32.00) 24¾″ × 19¼″ (63 × 49 cm) lens has more than twice the collecting area and yields a smaller blur circle of light at its focus than does the 16″ mirror.

By using an amplifier module, microphone, and 49-mm-square mirror (Edmund Scientific No. 41,619 at $1.50 each) cemented to the cone of a 2″ miniature speaker with white glue, you can put together an excellent voice transmitter that will greatly increase the range of your system.

There are many more possible modifications you can use. With a little ingenuity, you can push the range of your system out to several miles. ◆

PHOTON PHONE

The PHOTON is a light-talker: a communications system which requires no licence.

THIS IS NOT a morse flasher. This is the equivalent of a two-way radio — but using light instead of radio waves!

All a radio transmitter is, is a source of radio-frequency signals and some means of impressing information onto it. This project uses light, and as a source of light we use — you guessed it — a light bulb!

This project should provide not only an introduction to photoelectronics but also a product which is fun to build and use.

Using It

The device is almost as easy to use as a radio — you point your set at the one you want to communicate with; you switch to 'transmit'; with the other set at 'receive', anything you say into the built-in microphone will be heard, via the light beam, at the other set. Reversing the switch positions allows full two-way communication.

The range of the device is limited to about 15 to 20 yards but for many applications (at sea, in a factory, between moving vehicles or just across the street!) this will be sufficient.

The electronics are easy to put together — the only difficult bit is the case.

Construction

The flashlight we used can be seen in the various pictures. Actually any unit should do, as long as you have lots of space.

The first thing to do is to open it and remove the battery connectors in the inside of the top cover. We need the room and we're using a different type of battery anyway. You will find that these come out with a small amount of force — try not to damage the plastic.

The next thing to do is to take the bulb out and replace it with one of the same size and shape but of a different voltage (see the parts list). You will probably be able to get this at the same place you got the torch body. Now solder the wires onto the phototransistor, as shown in the overlay (the diagram which shows you what goes where on the board). Clip the unused (middle) wire short. The diagram shows a view looking onto the end of the wires. Take care not to damage the transistor by excessive heating — it's a good idea to hold the wire you're soldering at a point between the hoint and the transistor with a pair of long-nosed pliers while the joint is hot. This will prevent heat from getting into the transistor body. Insulate the wires in some way.

Having done that, fit the phototransistor (Q2) onto the bulb as shown in the photo. We used a quick-setting epoxy resin adhesive. You will have to make a small hole in the reflector for the wires to go through. Try to get the transistor as close to the focal point of the reflector as possible. This means mounting it at the very tip of the bulb.

Looking closely at the inside of the flashlight, you will find that the metal strips which form the normal circuit pass from the battery holders (or rather, where the battery holders were until we ripped them out!) up the hand to the switch and then back down to one side of the bulb assembly. Cut the connection between the switch and the bulb. This will probably mean a little minor metalwork with a pair of wire cutters. It should leave you (it is possible to trace the connection path fairly clearly with a little thought) with two connections to the bulb and two to the switch. Solder wires onto all four of these points. Leave the wires fairly long (6" to 8") for future connection to the board.

Start At The Bottom

The speaker fits into the base of the case (poetry, yet! — ED.) at the back. This means that you can either drill an artistic pattern of holes as we have done or just put a few large ones as you think fit. If you don't put any holes at all, the sound won't get in or out.

It's probably a good idea at this stage to solder a couple of wires onto the speaker and glue it into place.

The only thing left to do now is to fit the extension speaker socket (the method should be fairly self-evident from the socket mounting), as the other holes in the case should really be matched with the printed circuit board.

Board Meeting

Having acquired a printed circuit board fit it into the top of the case (making sure you get it the right way round) and mark out the rest of the holes to be made in the case:

a) the four PCB mounting holes,
b) the volume control (RV1) hole and
c) The SW2 hole (make this big enough for the push-fitting knob).

The construction for the electronics should be fairly straightforward — just follow the diagrams. Watch out that you get C1, the transistors and IC1 the right way round, though. We suggest you use an integrated circuit socket for IC1 — solder it onto the board and then plug the IC into it, making sure all the 'legs' go in. Use a heatsink on Q3. This acts in exactly the same way as a car radiator — it carries the heat into the air, preventing the transistor from overheating.

At the points where wires from the bulb, speaker etc. are to connect it to the board, poke stiff wire through the board and solder it, leaving about ½in sticking above the board. This will allow you to solder wires on the board *after* it has been bolted down. You will have to use similar bits of wire to connect RV1, as the leads on this will not poke through the holes.

If possible, use a 'lash-up' at this stage — a collection of bits of odd wire connecting the board to the various other bits of the circuit — to check that the board works before you bolt it in.

A view of the reflector modifications. The transistor should be placed with the small metal dot (just visible inside the protective gel of its case) towards the rear of the communicator. Some experimentation may be necessary to find the reflector's focal point exactly.

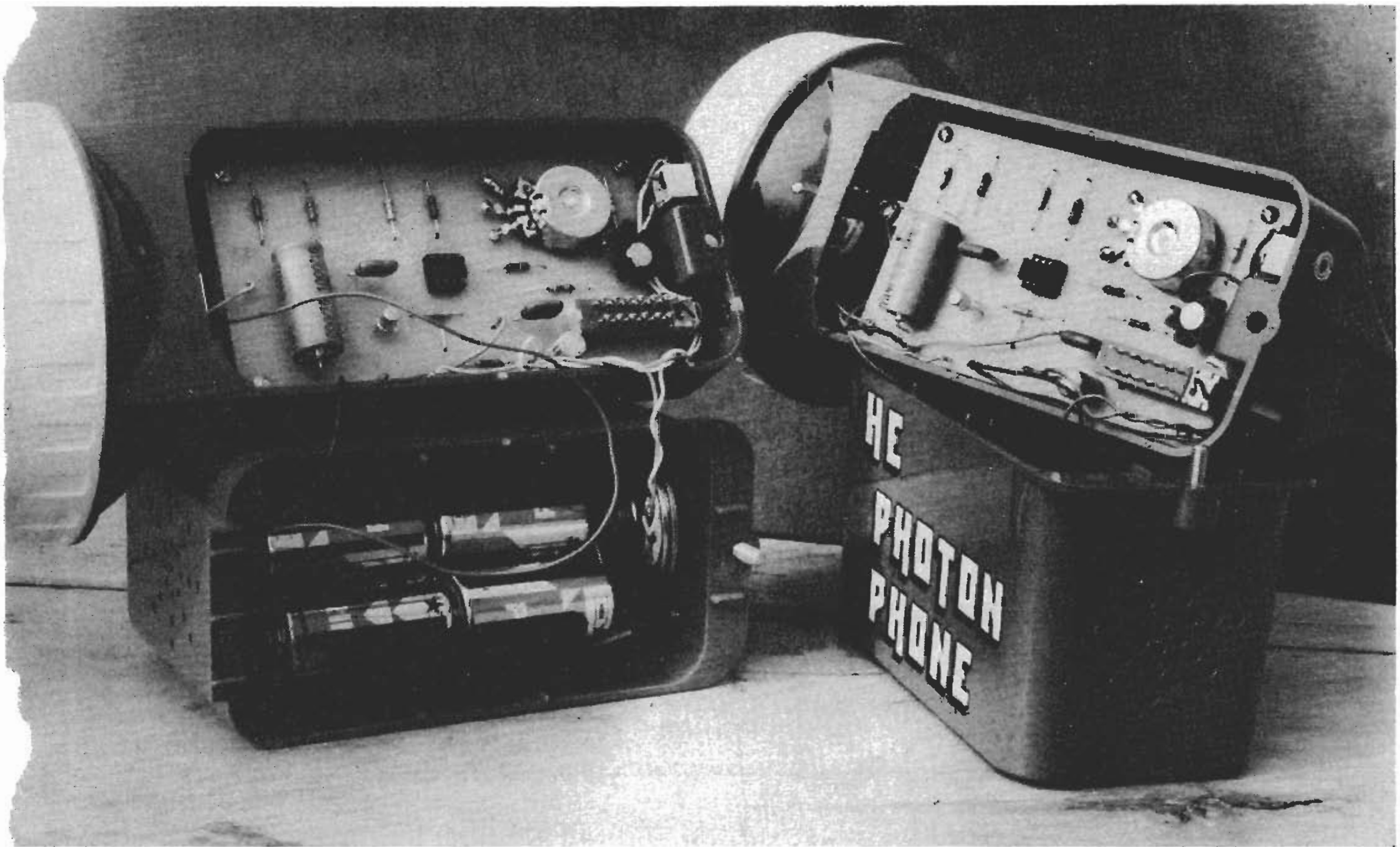

Bolt it Down

Use pillars on the four PCB mounting bolts. These are plastic or metal cylinders which slip over the first ¼in or so of the bolts and will hold the board away from the top of the case.

Actually getting the board in is a bit fiddley — but remember that you can always push SW2 in to get it out of the way. It might also be an idea to trim the spindle of RV1 a bit before you mount the board — not too much, though remember you don't know exactly what length it should be until *after* the board is fitted!

Having fitted the board and both of the knobs (SW2 and RV1), you can proceed with the wiring.

The only complicated bit is the wiring of the external speaker socket and the speaker. Connect the 'speaker' point on the board to one side of the speaker and also to the connection on the side of the socket. The 'socket' output of the board goes to the socket connection which is part of the sprung contact of the socket (put a plug into the socket — the bit of the socket that moves is the bit you want). The third socket connection goes to the other side of the speaker. Got all that?

If you're confused, just connect the speaker to the two board outputs mentioned to make sure it all works. You can connect the socket up later.

The battery holders should be connected in series: the "+" connection of one goes to the " — " connection of the other.

The remaining "+" connection goes to the handle switch (SW1 — remember those wires you connected earlier?) and the other side of the switch goes to the board.

Connect the rest up as per the diagram, and the whole thing should work! If it doesn't, check all the wiring carefully.

HOW IT WORKS

The circuit diagram shows SW2 in the 'transmit' position. The speaker (LS1) acts as a microphone in this mode. C1, R1, Q1 and R2 form a simple single-stage amplifier to boost the signal before it is fed, via C2, to IC1. R4, R6 and C2 set the average voltage at pin 3 of IC1 (the so-called 'bias' voltage).

Q2 is illuminated by LP1. Suppose LP1 is bright. This will cause more current to pass through Q2 and cause pin 2 of IC1 to go to a higher voltage. IC1 is connected as an inverting amplifier (in much the same way as the op-amps in the 'mixer' project on this issue) and so this will cause the output (pin 6) to fall in voltage. This in turn will turn Q3 down and the current through LP1 will reduce.

All in all, the effect will be to set LP1 at a brightness determined by the pin 3 input of IC1. As this is derived from LS1, speaking into it will cause a brightness fluctuation.

In the 'receive' mode, the light variations at Q2 will cause a voltage variation in the output of IC1. This is used to drive Q3 which is now connected to LS1.

Notice that the rest of the circuit is 'decoupled' from Q3 by R8 and C4. As this device is battery-driven, the current drawn by Q3 will cause major variations in supply voltage. So that these do not interfere with the rest of the circuit's operation, they are filtered out by R8/C4.

The circuit diagram. SW2 is shown in the 'transmit' position.

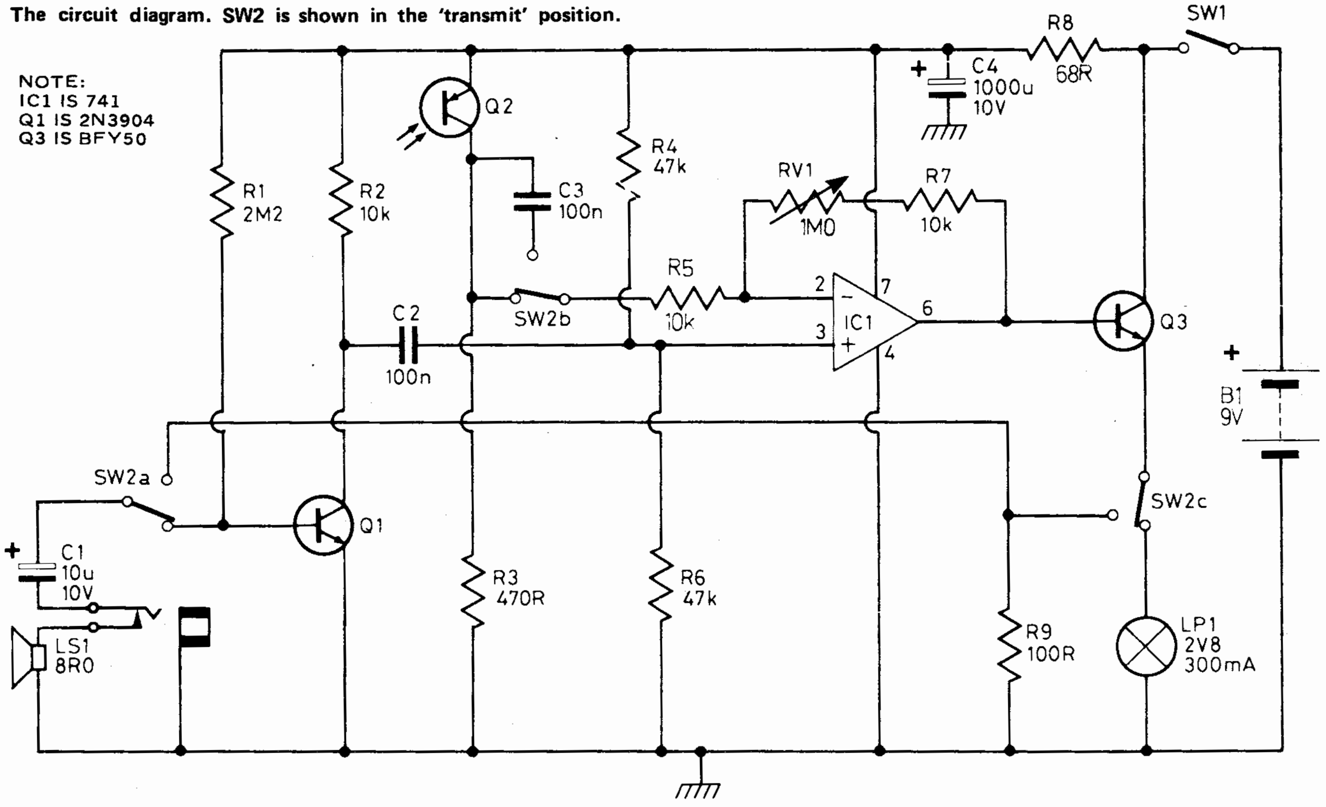

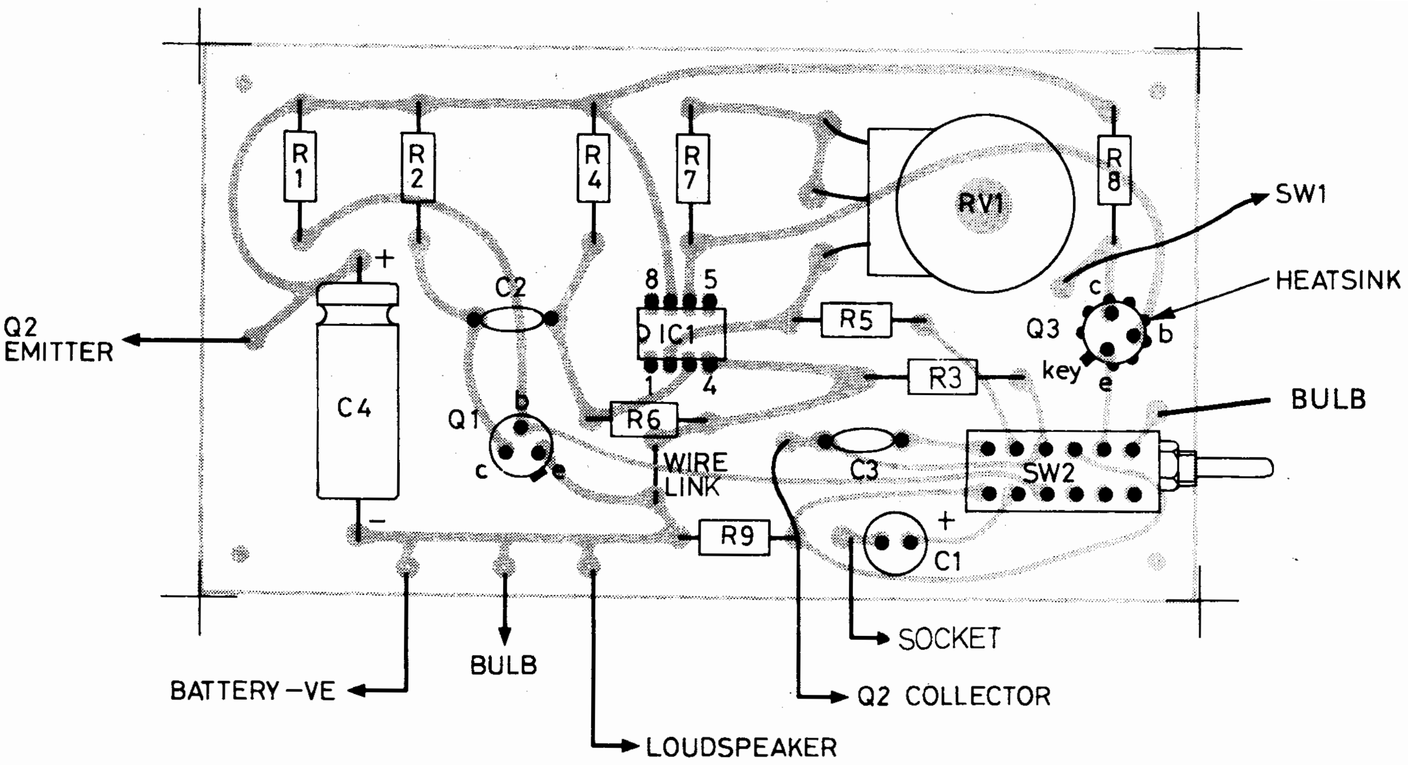

How to position the components on the PCB, make sure the transistors, integrated circuits, diode and electrolytic capacitors are the correct way round before soldering in place.

PARTS LIST

RESISTORS

R1	2M2
R2	10k
R3	470R
R4,6	47k
R5,7	10k
R8	68R
R9	100R

SEMICONDUCTORS

Q1	2N3904
Q2	phototransistor
Q3	BFY50 + heatsink
IC1	741

CAPACITORS

C1	10u 10V electrolytic
C2	100n polyester
C3	100n polyester
C4	1000u 10V electrolytic

MISCELLANEOUS

RV1	1M logarithmic
LS1	8R, 2 inch
SW2	4 pole 2 way, latching, PCB-mounting switch
LP1	2V8, 300mA

Spock To Enterprise . . .

With the sets switched on and the SW2s to the relevant positions (one in, one out) point the two devices at each other at a distance of a couple of yards. Speaking into the speaker of the one switched to transmit (SW2 out), you should be able to see the light intensity varying and a well-placed ear beside the receiving set should be able to hear your voice. (Needless to say, it will not be your ear if it's your voice two yards away!). The volume of the received sound can be adjusted by RV1 to give a pleasant level.

You may find that putting your ear to the speaker while pointing the device is a bit tiresome after a while. This is where SK1 comes in. A speaker similar to the one already used can be connected across a suitable plug and inserted into the socket. This has the same effect as plugging an earpiece into a radio. The internal speaker is 'disabled' (temporarily!) and the hand-held one is used instead. Putting the external speaker in a small box is a good idea, as is using 'screened' cable for the connecting lead. The centre of the cable goes to the tip connection of the plug.

Summary

This project is difficult to build as a finished product and the fact that two (at least!) are required may seem daunting. However, it can also be built as a "bread-board" type prototype, or into any type of box you can get your hands on. If you do build it as we suggest, though, you will have a very sturdy product indeed.●

A rear view of the PHOTON, showing the artistic pattern of holes we drilled to form the speaker grille!

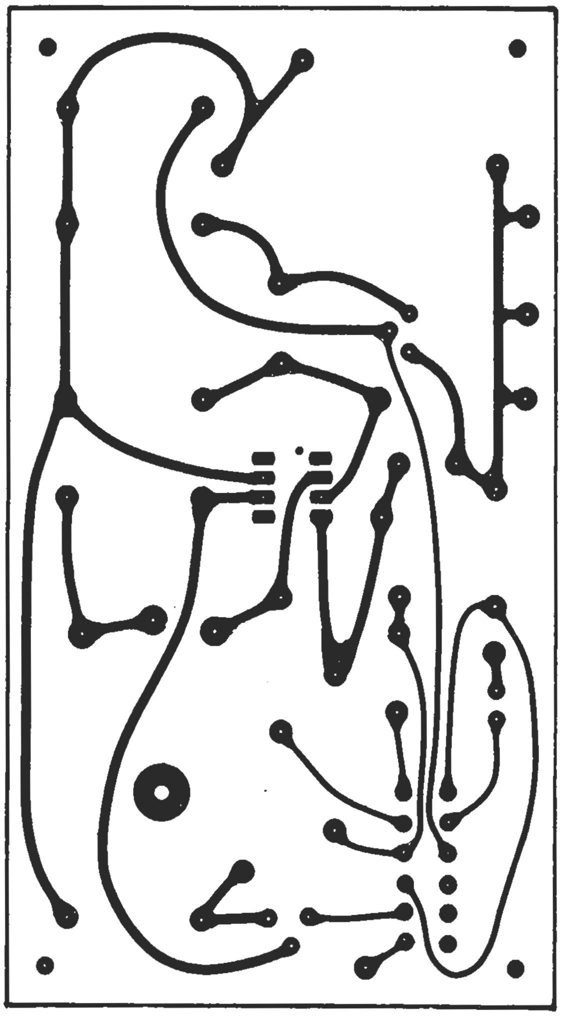

The printed circuit board pattern shown here is the correct size.

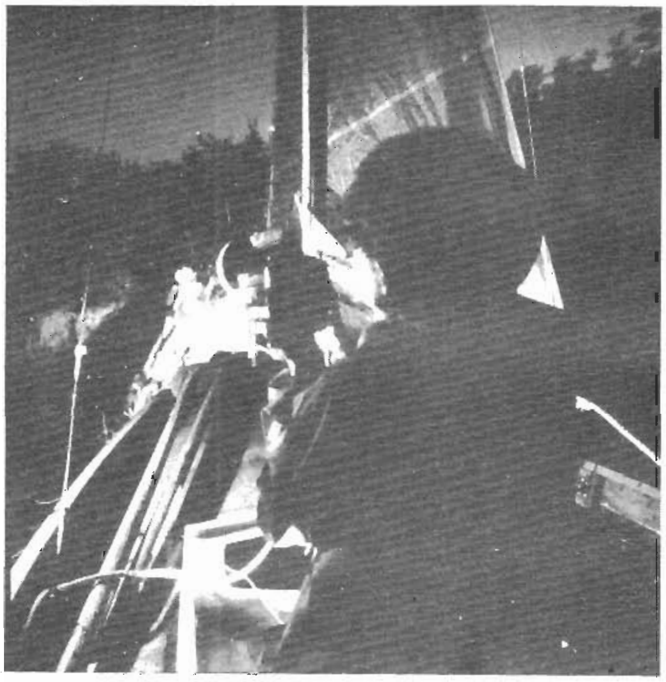

All at sea — but the PHOTON comes to the rescue.

THOMAS DELURIO, Senior Applications Manager • **EDDIE LEE**, Applications Manager
Advanced Analogic Technologies, Santa Clara, Calif.

SUPERCAPS lighten the Load in LED Flash Applications

The use of a supercap in combination with an application-specific driver IC alleviates stress on the battery in powering an LED flash bulb in cell-phone cameras.

CELL PHONES ARE BECOMING THE ultimate consumer all-in-one portable appliance, producing digital-still camera-quality pictures, supplying WiFi/Web access and delivering high-quality audio. As customers demand a wider array of new features, however, designers are struggling to ensure the phone battery provides enough peak power to drive these increasingly complex mobile applications.

Of all the functions in today's high-performance phones, the camera flash consumes the highest peak current. As a result, demand is building for circuits that can store high currents for short periods without overloading the battery to provide the power required for high-performance operation.

As designers have increased the resolution of camera phones to 3 megapixels and beyond, they also have increased the amount of light required to achieve a high-quality image. To match the photo quality of digital-still cameras, today's cell phones must either drive flash LEDs at currents as high as 2 A or xenon flash tubes charged to more than 330 V. Other applications in the phone — such as the RF power amplifier, GPS mapping, Internet access, music and video — can exceed source current availability as well.

When flash LEDs are the chosen light source, a compact power design can be created by combining a flash LED controller (a stepup converter IC) with a supercapacitor, which supplies high levels of current for short durations. This approach allows the use of smaller, lighter and less-expensive power sources while extending battery life. The advantages of this approach are illustrated by a reference design in which two flash LEDs are driven at 1 A each, delivering more light than a K800i xenon strobe. At less than 2 mm, the supercapacitor is thin enough to meet the rigorous footprint requirements of the cell-phone market; it can be used to enhance other features in the phone such as longer talk time and better audio.

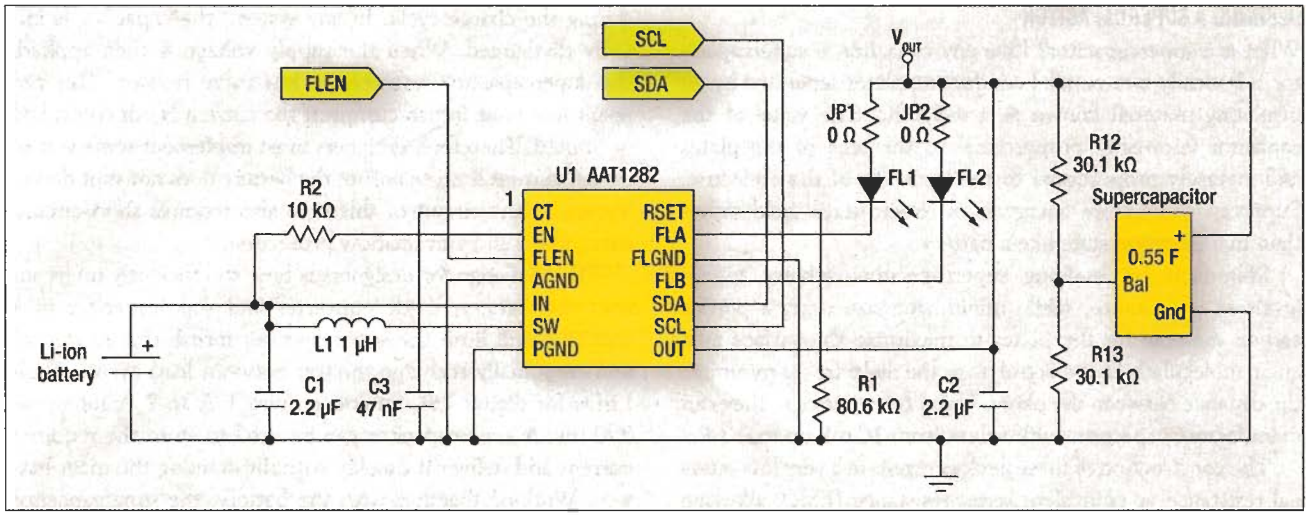

Fig. 1. Driven at 2 A each, LEDs FL1 and FL2 deliver more light than a K800i xenon strobe. The SC flash solution is less than 2-mm thick.

COMPARING LIGHT SOURCES

Cell phones with cameras greater than 3-megapixel resolution require a high-intensity flash in medium-light to low-light conditions to produce quality pictures. Although designers can use either LED or xenon flash units, each design strategy offers challenges:

- High-current flash LEDs need up to 400% more power than a battery can provide to achieve the light intensity needed for high-resolution images. To overcome this power limitation, some camera phones have used longer flash-exposure times to compensate for the lack of light. However, that strategy often results in blurry photos.
- Xenon flash tubes deliver excellent light power. Nevertheless, their short flash exposure cannot be used for a video-capture or movie-mode function. They also require electrolytic storage capacitors that are bulky, operate at high voltages, take a long time to recharge between flashes and cannot be used for other peak-power needs in the phone.

Designers can solve this problem with flash LEDs driven at 1 A to 2 A by using a capacitor to store the current and deliver it quickly without draining the main battery. However, conventional capacitor capability would require either a very large case size or multiple devices connected in parallel. A more practical solution for space-constrained portable systems is to use very high-value supercapacitors. These devices offer high levels of capacitance in a relatively small, flat case size.

By using a supercapacitor, designers can deliver the high-current levels needed for these short-duration events, and then recharge from the battery between events. To support the battery, designers can add a thin supercapacitor to handle the phone's peak-power needs — flash photos, audio and video, wireless transmissions and GPS readings — without compromising a slim-handset design.

This approach also allows designers to reduce the system footprint by optimally sizing the battery and power circuitry to cover just the average power consumption instead of peak levels.

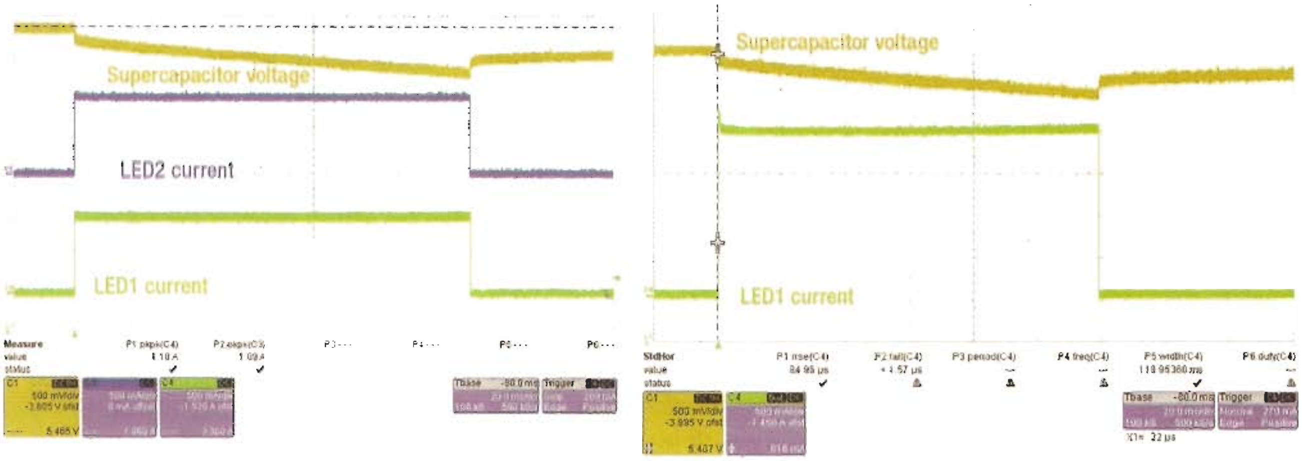

Fig. 2. Performance results are shown for two LEDs at 1 A each (a) or one LED at 2 A (b). (V_{IN} = 3.62 V provided by 875-mAhr Li-polymer cell, flash timeout is set for 100 ms, supercap is HS206F and LED is Lumileds PWF-4.)

DEFINING A SUPERCAPACITOR

What is a supercapacitor? Like any capacitor, a supercapacitor is basically two parallel conducting plates separated by an insulating material known as a dielectric. The value of the capacitor is directly proportional to the area of the plates and inversely proportional to the thickness of the dielectric. Supercapacitors store energy in an electrostatic field rather than in a chemical state like a battery.

Manufacturers building supercapacitors achieve higher levels of capacitance, while minimizing size using a porous carbon material for the plates to maximize the surface area and a molecularly thin electrolyte as the dielectric to minimize the distance between the plates. Using this approach, they can manufacture capacitors with values from 16 mF up to 2.3 F.

The construction of these devices results in a very low internal resistance or equivalent series resistance (ESR), allowing them to deliver high peak-current pulses with minimal drop in the output voltage. These supercapacitors reduce system footprint requirements by delivering a very high capacitance in a relatively small case size. They can be manufactured in any size and shape, and recharged in seconds.

By averaging out high power demands, supercapacitors extend battery life by up to a factor of five and allow designers to specify much smaller, lighter and less-expensive batteries. Supercapacitors also offer an operating life as long as 10 to 12 years with >500,000 cycles. Their failure mode is an open circuit (high ESR) rather than a battery's destructive event. Similarly, if overvoltage is applied to the device, the only consequence will be a slight swelling and a rise in ESR, eventually progressing to an open circuit.

POWER CHALLENGES

Low ESR presents designers with an inherent problem during the charge cycle. In any system, the capacitor is initially discharged. When the supply voltage is then applied, the supercapacitor resembles a low-value resistor. This can result in a huge inrush current if the current is not controlled or limited. Therefore, designers must implement some sort of inrush current limit to ensure the battery does not shut down. Typically, any circuit of this type also requires short-circuit, overvoltage and current-flow protection.

The challenge for designers is how to efficiently interconnect the battery, dc-dc converter and supercapacitor in a way that will limit the supercapacitor inrush charge current and continually recharge the cap between load events. Flash LEDs for digital-still cameras require 1 A to 2 A for up to 300 ms. A supercapacitor can be used to store the required current and deliver it quickly without draining the main battery. Working together with the battery, the supercapacitor discharges its power during peak loads and recharges between peaks, providing the power needed to operate systems from battery-operated hosts up to 200% longer while extending the life of the battery.

Clearly, any time designers use a supercapacitor, they must limit inrush current. In addition, the supercapacitor must be recharged when the voltage drops below the operational limit of the LEDs. Then, when the supercapacitor is fully charged, it has to be disconnected from the source. These flash-lighting systems also require short-circuit, source-overvoltage and current-flow protection.

DESIGN EXAMPLE

LED flash drivers are now available that can manage supercapacitor charging requirements and make the designer's job easier, integrating the circuitry to save space, cost and time to market. One example is AnalogicTech's AAT1282, a 2-A flash-driver IC, which contains a stepup converter used to boost the 3.2-V to 4.2-V battery input voltage up to a regulated 5.5 V. The AAT1282 also offers flash-management capabilities such as movie-mode and supercapacitor charging capabilities.

If the battery voltage is 3.5 V and the boost converter is 90% efficient, then the battery would need to supply more than 3 A for the duration of a 2-A flash pulse. This would either cause the battery-protection circuit to shut the battery down or cause a low-voltage shutdown with plenty of energy still remaining in the battery.

However, the stepup converter includes built-in circuitry that prevents excessive inrush current during startup, as well as a fixed-input current limiter of 800 mA and true-load disconnect after the supercapacitor is charged. The AAT1282's output voltage

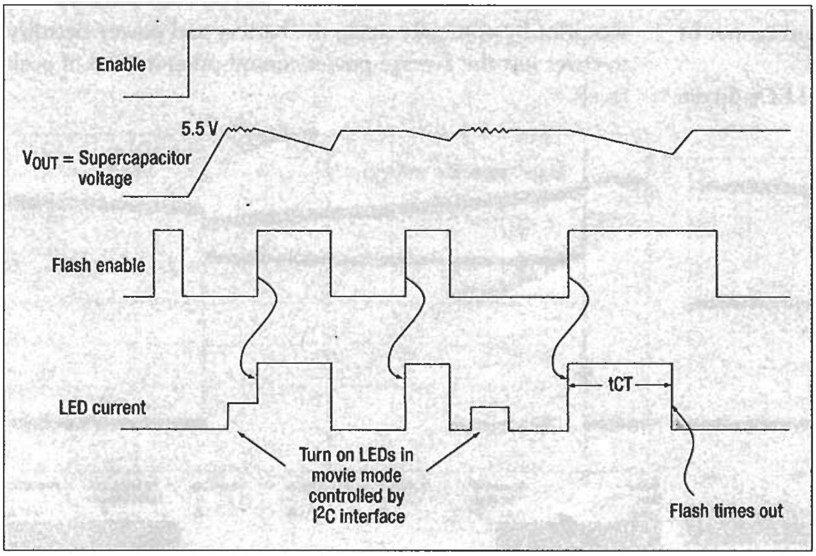

Fig. 3. Flash and movie-mode control. The movie-mode is controlled by the I^2C interface while the flash is controlled by a flash-enable pin.

REFERENCE DESIGNATOR	PART NUMBER
FL1, FL2	High-power flash LEDs such as Seoul Semiconductor's SSC-FCW401Z4 or Lumileds' PWF-4
SC1	CAP-XX HS206F, 0.55 F, 85 mΩ
L1	CooperBussmann SD3812-1R0-R, 1 µH, 2.69 A, 48 Ω
C1, C2	Murata GRM188R71A225KE15, 2.2 µF, 0603, X7R, 10 V
C3	GRM155R71A473KA01, 47 nH, 0402, X7R, 10 V
Battery	875-mAh Li-polymer cell

Table. Key components in Fig. 1 LED flash driver circuit.

is limited by internal overvoltage protection circuitry, which prevents damage to the AAT1282 and supercapacitor from open LED (open-circuit conditions).

During an open circuit, the output voltage rises and reaches 5.5 V (typical), and the overvoltage-protection circuit disables the switching, preventing the output voltage from rising higher. Once the open-circuit condition is removed, switching resumes. At this point, the controller will return to normal operation and maintain an average output voltage. An industry-standard I^{2}C serial digital input is used to enable and disable LEDs, and set the movie-mode current with up to 16 movie-mode settings for lower light output.

The schematic in Fig. 1 depicts the components needed to implement this flash-lighting subsystem, with some of the key components identified in the table. A 0.55-F 85-mΩ supercapacitor delivers 9-W LED power bursts using the flash LED driver IC. To achieve high light levels, the flash LEDs are driven at currents between 1 A and 2 A. The forward voltage (VF) across the LED at these high currents can range up to 4.8 V. If the 200 mV of overhead for the current-control circuitry is included, it is easy to see how the total load voltage during a flash event can range up to 5 V and require a 5.5-V stepup voltage.

Fig. 2 shows test results using two LEDs flashing at 1 A each and one LED flashing at 2 A. As the test results indicate, the supercapacitor can easily supply the necessary current for 500 ms while holding the supply voltage sufficiently above the VF of the LEDs. Between flash events, the supercapacitor is recharged at a steady rate to prepare for the next photo.

A current limit is set by the factory at 800 mA. The time to pre-charge an empty supercapacitor is about 5 seconds. The time needed to recharge the supercapacitor between two flashes is very minimal. It depends on the length of each flash. Fig. 3 shows the digital control of the flash function and movie-mode option.

The size of the supercapacitor was determined by the battery voltage, LED flash current, LED forward voltage, the efficiency of the AAT1282 and flash-pulse duration. For a 300-ms of 2-A flash, a 550 mF at 5.5-V type supercapacitor is suitable for most the application. AAT1282 has a built-in circuitry to prevent excessive inrush current to 800 mA during startup while charging the supercapacitor near ground potential. If the inrush current needs further reduction due to the size of the battery, the limit can be decreased. It also can be increased if desired.

The AAT1282 contains a thermal-management system to protect the device in the event of an output short-circuit condition. Thermal protection disables the AAT1282 when internal power dissipation becomes excessive, as it disables both MOSFETs. The junction over-temperature threshold is 140°C with 15°C of temperature hysteresis. The output voltage automatically recovers when the over-temperature fault condition is removed.

A NEW HOME IN PORTABLES

Until recently, supercapacitors have rarely been used in portable systems. Typically, they have been limited to backup or standby functions in fixed applications that use relatively low currents and offer fairly long charge times. But by combining new stepup converters with supercapacitors, designers can now create compact power designs that extend battery life. With a profile of less than 2 mm, the supercapacitor is thin enough to meet even the rigorous footprint requirements of the cell-phone market. ⏻

CAT. NO. **B2M**

1 856

As Featured in
IR
SCIENCE KITS

INTERNATIONAL RECTIFIER

SELENIUM PHOTOCELL & SUN BATTERY

Approximate Output in Sunlight: ⅓ to 0.4 Volt, 1½ to 2 MA.

SUITABLE FOR LIGHTMETERS, OPTICAL DEVICES, POWERING SMALL RADIOS, SCIENTIFIC PROJECTS, ETC.

THIS 24 PAGE HANDBOOK, PRICED AT 50c
FREE
WITH PURCHASE OF CELL.

SOLAR CELLS FOR EXPERIMENTERS

By Donald L. Stoner, W6TNS

CHAPTER 1 — MEET THE SOLAR CELL

The earliest practical use for sun generated electricity is the light meter which is used to indicate the correct exposure settings for cameras. In this device a photocell is connected to a moving coil meter (see Fig. 1).

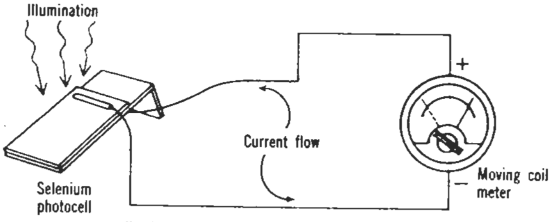

Fig. 1 Meter measures selenium photocell output

When light strikes the cell, a tiny electrical current is generated. This current flows through the meter coil and causes the pointer to move. When the sun is bright, the meter reads higher than it would on a cloudy day, for example. The meter is calibrated in light units and indicates the correct settings for the camera.

More recently, our space scientists became interested in converting the sun to electricity. They faced the problem of spending millions of dollars to orbit a satellite, only to have its batteries run down after a few weeks of operation. In effect, the solar cell provided the scientist with an extension cord to the sun! The "space man" devised a system with solar cells and batteries which would recharge when the satellite zoomed around the sunlit side of the earth. One example is the Tiros satellite which takes pictures of the earth for weather forecasting. It is powered by the sun's rays falling on panels made up of solar cells. These panels maintain a full charge on the batteries and keep the electronic equipment working properly.

How They Work

Cells which convert sunlight directly into electricity can be made in many ways and vary in size, shape and characteristics. The theory of operation for all types is much the same, however. From high-school physics we know that an electric current is created whenever we set electrons in motion. When we switch on a flashlight, we permit electrons to flow from one battery terminal to the other through the bulb. Another example is the generator in an automobile which moves a wire through a magnetic field. This forces electrons through the wire, and creates an electrical current.

Like the wire, cells which convert sunlight into electricity contain many electrons, but these are held tightly in place. When the cells are illuminated, the rays of light activate electrons and send them through an electrical circuit. This movement of electrons constitutes electrical current. It's as simple as that!

Photocells and Solar Cells

The cells used in the camera light meter, mentioned earlier, are called *photocells*. Scientifically, these cells are known as photovoltaic cells. The cells are made from an element known as selenium, which is carefully processed to permit electrons to be freed by light. Selenium is placed on a metal plate, so it can be handled without damage, and wire leads are attached. Selenium cells "see" the same light spectrum as the human eye. Another type of cell, the one used in satellites, is made of the element silicon, and is correctly called a *solar cell*. Silicon is the most common element found on our planet, and it is the same material which we use to make glass. However, to process silicon so that sunlight will free electrons is a costly operation and therefore this type of cell is relatively expensive. These cells are very delicate and are enclosed in plastic cases for easy use by experimenters.

A third type of cell made from cadmium

sulfide does not generate electricity from sunlight. This cell has the very useful characteristic of changing resistance when illuminated. Some types when removed from light to dark, change in resistance by a factor of millions. By connecting it in series with a battery or an AC supply, the cadmium-sulfide cell can control the flow of current in relays, transistor circuits and meters (see Fig. 2).

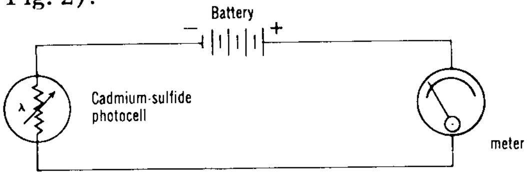

Fig. 2 Cadmium sulphide photocell controls current flow (Minimum resistance when cell is illuminated permits maximum current flow)

When the cell is dark, maximum resistance permits only a small amount of current to flow in the controlled circuit. When the cell is illuminated, its resistance drops to a low value and almost the entire supply voltage reaches the controlled circuit.

A Home-Made Sun

It is not always convenient to wait until the sun makes an appearance to experiment with solar cells. You can make your own "sun" by mounting a 150 watt reflector-type floodlamp one foot above your work surface. Don't be tempted to move it closer to the

cell because the heat can destroy the material. Vary the distance between the cell and light to demonstrate the effect of intensity changes.

CHAPTER 2 — **MEASURING SOLAR POWER**

Experiment #1

For the following experiment you should use a volt-ohm-milliammeter which can measure as low as one milliampere of current and has a 0-3 volt scale. You will also require a 22 ohm resistor, and of course, a cell.

Connect the cell to the meter and switch to the 3 volt scale. Illuminate the cell and measure the voltage. If you have a B2M, B3M or S1M cell, the voltage will read between one third and one half volt with bright illumination, such as direct sunlight. (Type S3M or S5M gives twice this voltage.) Now connect the 22 ohm resistor across the meter and cell as shown in Fig. 3.

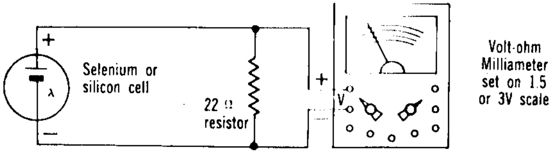

Fig. 3 Meter measures cell output voltage

You will find the B2M and B3M now produce only a tiny voltage. The S1M, however, will produce between 0.2 and 0.3 volts.

The 22 ohm resistor is called a "load" and represents the circuit which uses the power generated by the cell. From this experiment you can conclude that the silicon cell can deliver more power than can the selenium cell. This is, in part, caused by the fact that the silicon cells convert not only visible light, but also some of the invisible spectrum into electricity. Selenium cells, however, have a response very similar to the human eye and are therefore recommended for photographic or similar optical applications.

Experiment #2

Set the meter on its 25 ma. range and connect it in series with cell as shown in Fig. 4.

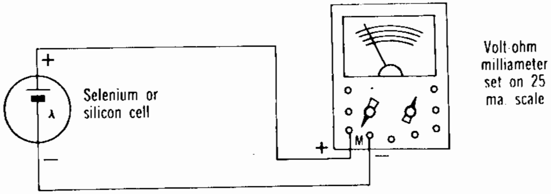

Fig. 4 Meter measures cell output current

With these connections we can observe the current produced by the cell. The B2M and B3M will produce approximately one to two ma, while the S1M may generate up to 15 ma. Thus you can conclude that the S1M produces more current than the B2M or B3M under the same illumination.

Experiment #3

You can determine the actual power your cell produces by multiplying the voltage times the current in ma. The answer will be in milliwatts (1,000 mw. equals one watt). For example, if your S1M produces 0.4 volt at 14 ma. (14 × 0.4 = 5.6), the cell produces 5.6 mw. of power. A typical B2M or B3M might generate 0.4 volt at 1.5 ma., or 0.6 mw. of power.

Experiment #4

Connect a cadmium-sulfide cell Type CS-120 to the highest ohmmeter range. When the cell is covered, or dark, the resistance will measure more than half a million ohms. Now, illuminate the cell. The resistance when illuminated will drop to several thousand ohms or less, depending on the amount of light. This experiment shows that the cadmium-sulfide cell produces a large change in resistance when illuminated, which can be used to control electrical circuits.

Experiment #5

You can make a perpetual battery by connecting the circuit shown in Fig. 5.

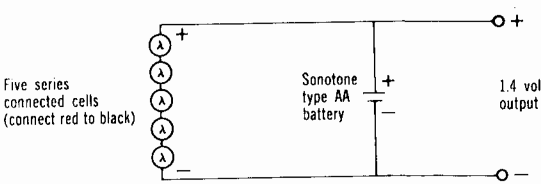

Fig. 5 Perpetual battery similar to the same basic system used in sun powered satellites

This is the same basic system used in our sun powered satellites, but on a much smaller scale. The circuit uses a single Sonotone Type AA nickel-cadmium rechargeable battery.

Five B2M or five B3M cells will charge the battery at approximately one ma., while the S1M cells will charge at a rate of 10 ma. More cells can be connected in series parallel for higher charging rates, or you may use the higher output types S3M or S5M cells. The battery will lose its charge only if more current is drawn from it than the cells are able to replace.

CHAPTER 3 — **SUN RELAYS**

Like the battery just described, you can construct a perpetual sun relay. Whenever the sun is shining, the current from the cell can be used to energize a relay without the aid of batteries, transistors or other accessory devices.

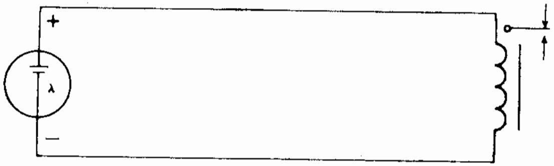

Fig. 6 Perpetual sun relay with ultra-sensitive relay powered by one cell.

Figure 6 shows the connections for a perpetual sun relay circuit. The relay is an ultra-sensitive type made by Barber-Coleman of Rockford, Ill., and is called a "micropositioner." The relay will trip, or energize, on the current generated by only one cell.

If type B2M or B3M cell is used, model AYLZ7303-100 is best suited. If silicon cell such as S1M is used, type AYLZ7325-100 is recommended. These relays are expensive and run over $20.00 a piece. Another relay which will work satisfactorily with one or two silicon cells, and sells for around $11.00 is the Sigma type 5F-16SS-PAL.

Another type of perpetual sun relay is shown in Fig. 7. This circuit requires six

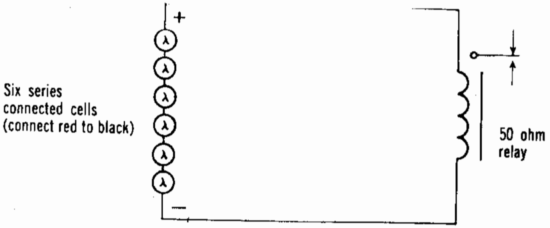

Fig. 7 Perpetual sun relay with 50 ohm model airplane radio control relay powered by six S1M cells

S1M or three S3M cells to trip a 50 ohm model airplane radio control relay. These are sold through model or hobby shops and manufactured by W. S. Deans Co., 8512 Gardendale St., Downey, Calif., also by Jaico Products Co., 1921 W. Hubbard, Chicago.

A third type of light relay uses the cadmium-sulfide cell, but requires a power supply and therefore does not qualify as a "perpetual" type. The circuit is shown in Fig. 8.

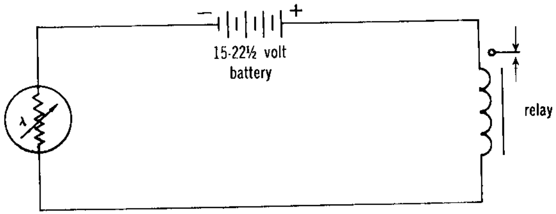

Fig. 8 Sun relay controlled by cadmium sulfide photocell

When light shines on the cadmium sulfide cell, its resistance drops and permits the current to energize the relay. The relay in this circuit is a 5,000 ohm type as used for model airplane radio control.

Other relays which work satisfactorily are the Sigma 41 series with 1000 or 2500 ohm coil resistance.

For continuous use, such as for turning on lights in the evening, the same circuit can be used by substituting a bell type transformer (available from electricians) for the battery and operating the circuit from the regular

115 volt AC line. The relay, in this case, should be of the AC type.

As the cadmium sulfide cell, type CS-120 may be operated on voltages up to 120 volts AC or DC, the use of a transformer is not necessary and the circuit may be operated directly from the line current. However, the coil resistance of the relay should be around 10,000 ohms in this case. As there are certain hazards connected with working directly with a full line voltage, this circuit should only be assembled by someone familiar with the problems and aware of the dangers. Practically no hazard exists when using batteries or a bell type transformer circuit.

Experiment #6

By using an inexpensive transistor and battery, you can eliminate the need for expensive relays and still use only one B2M, B3M or S1M cell.

The transistor is a sensitive device for amplifying current flow. For example, a current of one ma. from a solar cell in the transistor base can control 10 ma. in the collector circuit. We call this process *current* amplification. (See Fig. 9.)

When wiring this type of circuit be careful to connect the plus and minus points correctly. The battery will be clearly marked. The plus end of the cell is red, and the minus

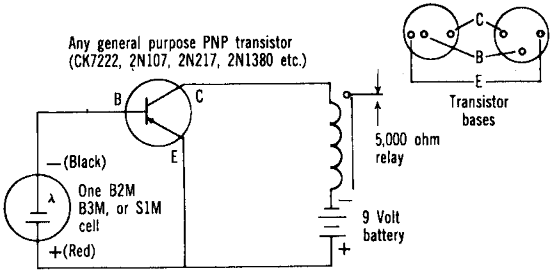

Fig. 9 Transistor current amplifier powered by solar cell

end is black. This experiment illustrates the fact that inexpensive transistors are useful for replacing more sensitive, but expensive components.

Experiment #7

The same transistor amplification system can be used with the cadmium-sulfide cell to trip a 5,000 ohm relay. The circuit is connected as shown in Fig. 10.

In this circuit, the battery current applied to the transistor for amplification passes through the CS - 120 cell. Different light levels vary the cell resistance which changes the amount of current available for amplification. The transistor steps up this current, or amplifies it, which actuates the relay.

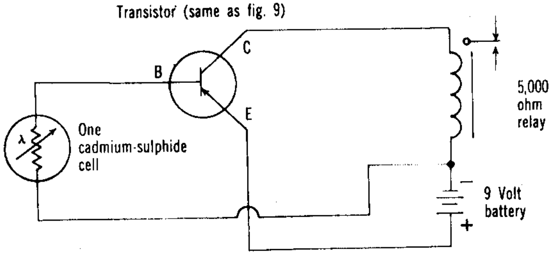

Fig. 10 Sun relay controlled by cadmium sulfide cell

Experiment #8

By adding a second transistor to experiment #6, you can build a super-sensitive sun relay as shown in Fig. 11.

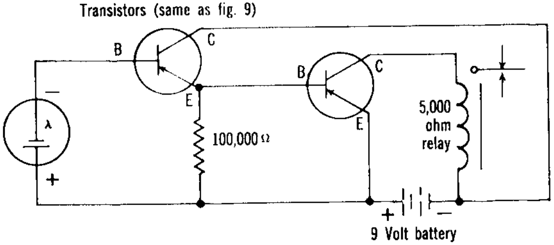

Fig. 11 Supersensitive sun relay powered by one S1M solar cell

In this circuit, the current from the cell is increased by transistor 1. This amplified current is then passed to transistor 2 where it is again stepped up. As a result, only a tiny voltage which corresponds to very little illumination is sufficient to trip the relay. The sensitivity is determined by adjustment of the relay spring or you may partially cover the cell with cardboard or tape. The circuit will trip the relay on virtually any amount of light and a flashlight at 100 feet will easily close the relay.

In this and the preceding circuits, the relay can be connected to ring a bell, flash a warning light, or energize other types of alarm systems. It can also be connected to turn on porch, store or street lights whenever the sun drops below a certain point.

CHAPTER 4 — **SUN POWERED RADIOS**

One of the most fascinating projects you can build is a radio which derives its power from the sun. Contrary to what you might think, it is not expensive—in fact, the bill of materials should run not much over five dollars. A one transistor sun-radio is shown in Fig. 12.

Experiment #9

Here's how it works: The signal from the

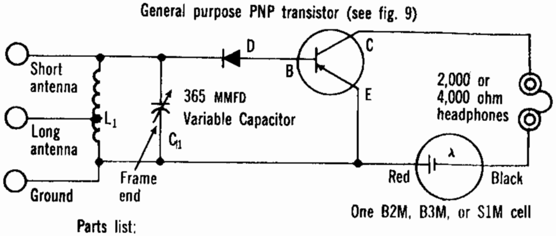

Parts list:
C_1—365 mmfd variable capacitor (J. W. Miller #2111 or equivalent)
D—Crystal diode, 1N34, 1N48, etc.
L_1—Transistor loopstick antenna (J. W. Miller #2001 or equivalent)

Fig. 12 Transistor radio powered by one solar cell

radio station is intercepted by the antenna which is connected to a coil and tuning capacitor. It is the purpose of this "team" to tune in the desired frequency from the many signals traveling through the air. Once the desired signal is selected, a device called a diode detector converts the radio frequency energy to audio frequencies, so that they can be heard.

The tiny electrical signal from the detector is passed on to a transistor for amplification as described in chapter 3. The amplified signals then energize the headphones which convert the electrical impulses to sound waves. No battery other than the photocell is required to power the radio; however, a penlight or other small flashlight cell could be used to operate the set at night. The radio is designed to use either a short (10-20 ft.) or long antenna (20 ft. or more).

When you examine the coil (L1), you will see three wires. One of the wires will be doubled up (two wires in one) and this lead connects to the long antenna. The lead nearest the double wire goes to the frame of the tuning capacitor and to earth ground. The remaining wire goes to the lugs on the side of the tuning capacitor. Connections to the frame of the tuning capacitor can be made by inserting a short screw in one of the front holes and wrapping a wire under the screw head. Be sure the screw does not touch the aluminum plates. The connections to the transistor are similar to those in Fig. 9, except that headphones are used in place of the relay.

For best performance, connect the receiver to an antenna of 20 feet or more. Remember, the longer the antenna, the greater the volume and number of stations you can receive. In metropolitan areas, a long antenna may create the problem of station interference. A good ground will also improve reception. A suitable ground can be made by connecting the receiver to a cold water pipe or by driving a four-foot copper stake into moist earth.

When testing the radio, try both antenna connections and use the one which provides the best performance. You may have more volume by using the short antenna connection, but separation between stations will be better using the long antenna connection. For aditional volume, on weak stations, you can connect two or more cells in series to increase the sun voltage, or use a type S3M cell.

This experiment proves that the sun powered amplifier greatly improves the volume of a diode detector. To hear the difference with and without the transistor amplifier, connect the headphones between the base and emitter of the transistor. The signal at this point is not amplified and will be much weaker.

Experiment #10

You can increase the output of the one transistor solar-powered radio by adding a second transistor amplifier stage. The circuit is shown in Fig. 13.

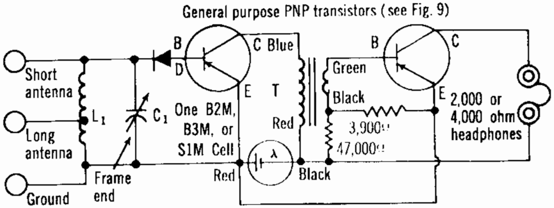

Parts list:
T — 10,000 ohm to 2,000 ohm interstage transformer (Stancor TA-35 or equivalent
(Other parts, same as Fig. 12)

Fig. 13 Two transistor radio powered by one solar cell

A transformer is needed to couple the output of one transistor to the input of the next. The transformer may be any interstage type, such as the Stancor TA-35, or a Triad No. TY56X, rated at 10,000 ohms to 2,000 ohms. The transistor types and connections are the same as in Fig. 9.

This radio will always work best with the antenna on the long connection. Even so, you may find it has too much volume for clear reception. If this is the case, you can connect a 100 mmfd. (or less) capacitor in series with the antenna. For weak stations you can obtain more volume by connecting several cells in series or by using a type S3M cell.

If additional cells are used and if you use different transistors or headphones, it may be necessary to vary the value of the 3,900 ohm resistor for best reception.

From this experiment you can conclude that a single cell, powered by the sun, provides enough energy for very loud earphone volume. If you use several cells, you may even use a small speaker, but do not expect too high a volume.

CHAPTER 5

SUN POWERED OSCILLATORS

Earlier we mentioned that electrons forced to flow through a wire are an electric current. If the electrons move in only one direction, we call this a direct current. If they are made to move first in one direction, then in the opposite, we call this an alternating current.

Slow alternations, known as low frequency cycles, will be in the audio range. This band is generally considered to be between 16 and 20,000 cycles per second. If the electron alternations are speeded up, to several million cycles per second, we generate radio frequency energy which can be sent through space.

Let's build several of these oscillators in different frequency bands, solar powered of course, and see how they work.

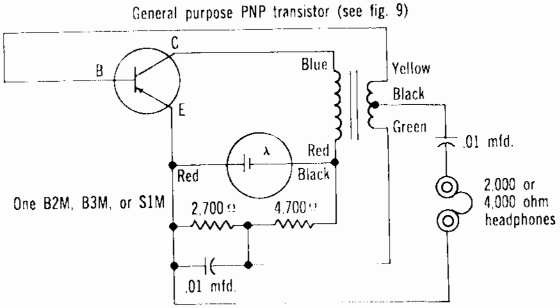

Fig. 14 Audio oscillator powered by one solar cell

Experiment #11

Fig. 14 shows a solar powered audio oscillator. Its frequency of alternations, or oscillations, is about 400 cycles per second. In this circuit, the energy amplified by the transistor is applied to the transformer primary (blue-red). A portion of the energy is fed back to the base of the transistor where it is again reamplified. Connected in this manner, the circuit current constantly builds up, then breaks down. In other words, it oscillates.

The transformer can be any interstage type rated at 10,000 ohms to 2,000 ohms, center-tapped. Although 2,000 or 4,000 ohm headphones are specified, almost any type can be used. With only a single cell, you will find that the volume is extremely high. You can use the audio oscillator for code practice by inserting a telegraph key in series with the cell.

Experiment #12

A tunnel diode radio frequency transmitter, which will generate a strong signal on the broadcast band (550 to 1600 Kc.) is shown in Fig. 15.

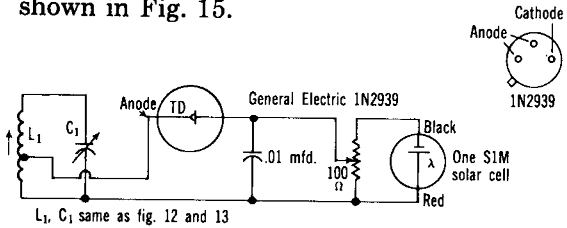

Fig. 15 Tunnel diode radio frequency transmitter powered by one S1M solar cell

It uses the same coil and tuning capacitor as in Figs. 12 and 13. In this circuit, the anode end of the tunnel diode is connected to the long antenna connection shown in the radio circuits. A single solar cell provides approximately 0.5 volt, and a small portion of this voltage is applied to the diode through a 100 ohm potentiometer.

The circuit is adjusted as follows: Place a portable radio, tuned to a weak station near the high end of the band, near the coil. Rotate the potentiometer and tuning capacitor at the same time. At one setting you should hear the radio station disappear, indicating oscillation of the tunnel diode. You will find one position on the potentiometer where the signal will be very strong. As you move the radio away from the tunnel diode oscillator, the signal will get weaker and become a whistle on the weak station you tuned in originally.

The tunnel diode is available at electronic supply houses selling General Electric tubes and costs about $6.00 each. Mail-order houses also stock them.

Experiment #13

Let's build a solar powered Citizens Band 27 mc. transmitter. The circuit is illustrated in Fig. 16.

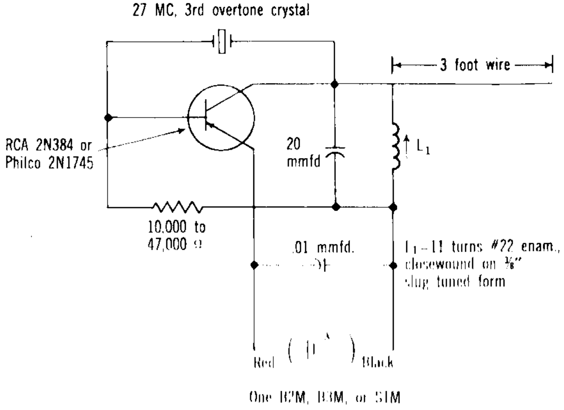

Fig. 16 Citizens Band 27mc transmitter powered by one solar cell

The frequency of the transmitter is controlled by a quartz crystal (at 27 mc. third overtone type, commonly found in Citizens Band transmitters). The coil and its associated capacitor tunes the transistor to amplify and oscillate at the crystal frequency. The small length of wire serving as an antenna permits the radio frequency energy to travel several hundred yards.

The transistor may be any of the Philco MADT types such as the 2N1745 or an RCA drift type 2N384. After the circuit is completed, it may be necessary to vary the value of the resistor between 10,000 and 47,000 ohms to obtain maximum signal.

SOME ADDITIONAL VALUABLE POINTS:

How Do I Mount My Cells?

The B2M has a bracket with a hole for mounting. It is shipped flat but can be bent in any angle (see picture on inside back cover). All other experimenter type cells come in a plastic case. A double faced, pressure sensitive adhesive disc is shipped with each cell. Just peel off the backing on one side and press it to the cell. Then remove the backing of the other side, and you can attach the cell to almost any surface.

All cells are 100% checked before shipping. With proper care they will last indefinitely (some have been used daily in International Rectifier Photocell Labs for over 12 years and are as good as new). However, cells are not guaranteed against damage through rough handling, moisture or excessive heat.

How Much Power Can You Get From Sun Batteries?

There is no limit to the amount of electricity you can produce from sunlight. The more cells you use, the more power you get. Just remember that you increase the voltage by connecting the cells in series, as shown in Figs. 5 and 7. If you make the connection in parallel, you increase the current (amperage). Cells may be put in parallel and in series to get more voltage and more current.

How To Get The Maximum Power From The Cells

Some applications, such as operating a relay or a motor make it necessary to get maximum cell efficiency. To do this, you must "match the load to the cell." With a silicon cell, operated in sunlight, the load (relay coil, etc.) should be in the 15-25 ohm range. For selenium cells, 75 to 125 ohms is most efficient. When you put cells in series, the load resistance should go up proportionately. If, for instance, you use three S1M sun batteries, the best value for your load will be about 50 to 70 ohms. Types S3M and S5M sun batteries contain 2 cells, wired in series.

EXPERIMENT WITH MOTORS

One of the most effective demonstrations of the use of power from the sun can be given by driving a small DC motor directly from a sun battery.

Suitable motors are the International Rectifier Corp., type EP-50, and the Aristorev type #1. Two S1M, or one S3M or S5M cells will drive these motors nicely. They are available through most hobby shops.

A cardboard or foil disc, using some imaginative designs and glued to the shaft of the motor, will make a very fine demonstration.

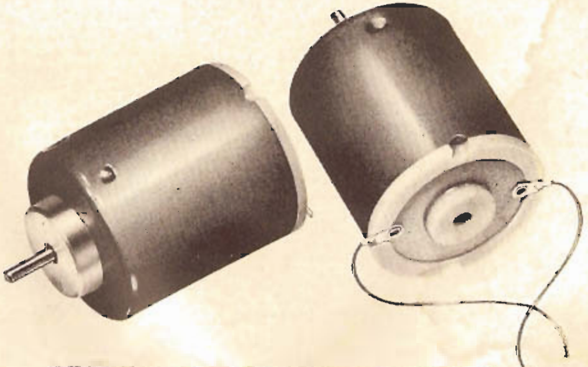

INTERNATIONAL RECTIFIER PRECISION MOTOR
TYPE EP-50 (shown approximately full size)

PRICE $3.95

SPECIFICATIONS

FOR INTERNATIONAL RECTIFIER EXPERIMENTER TYPE CELLS.

Cat. No.	Description and Size	OUTPUT* Volts	MA.	Net Price
B2M	Selenium cell with mounting bracket. Cell size ½″ x ¾″	⅓ to 0.4	2	$1.50
B3M	Selenium cell in molded plastic case. Case Dim. 1⅛″ x 1⅛″ x 3⁄16″	⅓ to 0.4	1½ – 2½	1.75
S1M	Silicon cell in molded plastic case. Case Dim. 1⅛″ x 1⅛″ x 3⁄16″	0.3 to 0.45	10 – 16	2.25
S3M	Selenium cell contains 2 elements in series, therefore doubling voltage. Same size as S1M	0.6 to 0.85	10 – 16	3.95
S5M	Same as S3M but extra-high efficiency type	0.6 to 0.85	18 – 25	4.95
CS-120	Cadmium Sulphide cell, 1⅛″ x 1⅛″ x 3⁄16″. Maximum voltage 120V AC or DC. 0.2 Watt Maximum Power Dissipation. Resistance: 200 OHM to 1.5 Megohm. Dep. on Illumination			2.35

*In full sunlight, using conventional volt and milliamp meters.

The B2M, B3M, S1M and CS 120 Cells are carried by your dealer. Extra-High-Efficiency types S3M and S5M can be obtained on special order through your dealer.

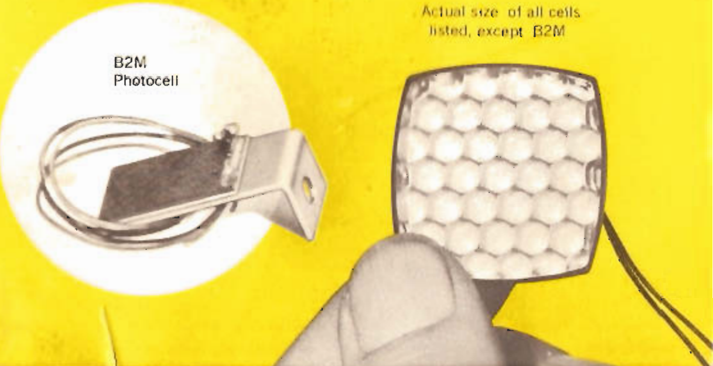

Actual size of all cells listed, except B2M

NOW! It's easy and fun
to build your own

Solar Powered Transistor Radio!

Two new International Rectifier Kits feature space-satellite solar cells—the most efficient circuit ever designed and handsome, unbreakable plastic cases.

No Tools Required—No Soldering!

It's a cinch to put together this portable radio that will be a constant companion day or night. Powered from the sunshine in daytime...from batteries at night! A flick of the switch changes from solar power to pen-light batteries for hours of listening. Choose from personal ear-phone type or speaker type...both transistorized...both radios that you will be proud of!

See These Kits at Your Dealer's!

International Rectifier Corporation
El Segundo, California

12 63 15 CK

LITHO IN U.S.A.

CONVERTING TRANSISTORS TO PHOTODEVICES

Q. ***Somewhere I read that almost any transistor can be converted into a photodevice. Is this true? I would like to experiment along these lines. How do I go about it?***

A. Although it does not make the greatest photodevice in the world, you can convert an ordinary metal-encased transistor into a light-sensitive device. Select a silicon type having a high beta and a high f_T. Preferably it should be planar passivated. Very carefully cut away the case to expose the silicon chip—don't break the chip leads. Cut off the base lead. You will use only the collector and emitter leads. Seal the device in clear epoxy. That's all there is to it; if you were lucky enough to choose the right transistor, you will have a good photodevice. In one example we heard of, a 2N699 was converted and has a rise time of about 0.4 µs and a fall time of about 0.6 µs. You will need some form of amplification to get any useful output.

Low-cost plastic connector speeds the polishing of fiber-bundle ends

by T. Bowen
AMP Inc., Harrisburg, Pa.

Molded thermoplastic connectors are an inexpensive, fast, and reliable way of terminating fiber-optic bundles. Economically mass-produced, they weigh much less than metal parts and also interfere less with the optical polishing of the bundle ends. Any plastic smeared across the fiber surface during the polishing will be too soft to score them, unlike metal, and can easily be removed.

The connector shown in Fig. 1 is one of a series designed to further simplify the polishing process—in fact, as will be explained later, it can be installed in the field by people without special skills or training. Equally important, it optimizes packing fraction—the ratio of active cross-sectional area of optical-fiber cores to the total end-surface area of the bundle—and can handle the full range of fiber-bundle types and size from most major fiber-cable manufacturers.

It mates with either an input/output bushing that can house many standard light sources and detectors or with a splice bushing for terminating cables. For a dry splice—two face-to-face terminations separated only by air—insertion loss is about 3 decibels, a figure that falls to about 2 dB when an index-of-refraction-matching fluid is added as a coupling medium.

Before this connector can be attached to an optical-fiber cable, the cable's jacket must be stripped away and a generous amount of an epoxy or a cyanoacrylate adhesive applied to the exposed fibers. The connector assembly then slides easily onto the bundle, and the crimp ring attaches it to the jacket. The closing action of the specially contoured polishing bushing radially compresses the nose end of the ferrule, squeezing all the fibers together. This spreads the adhesive thinly,

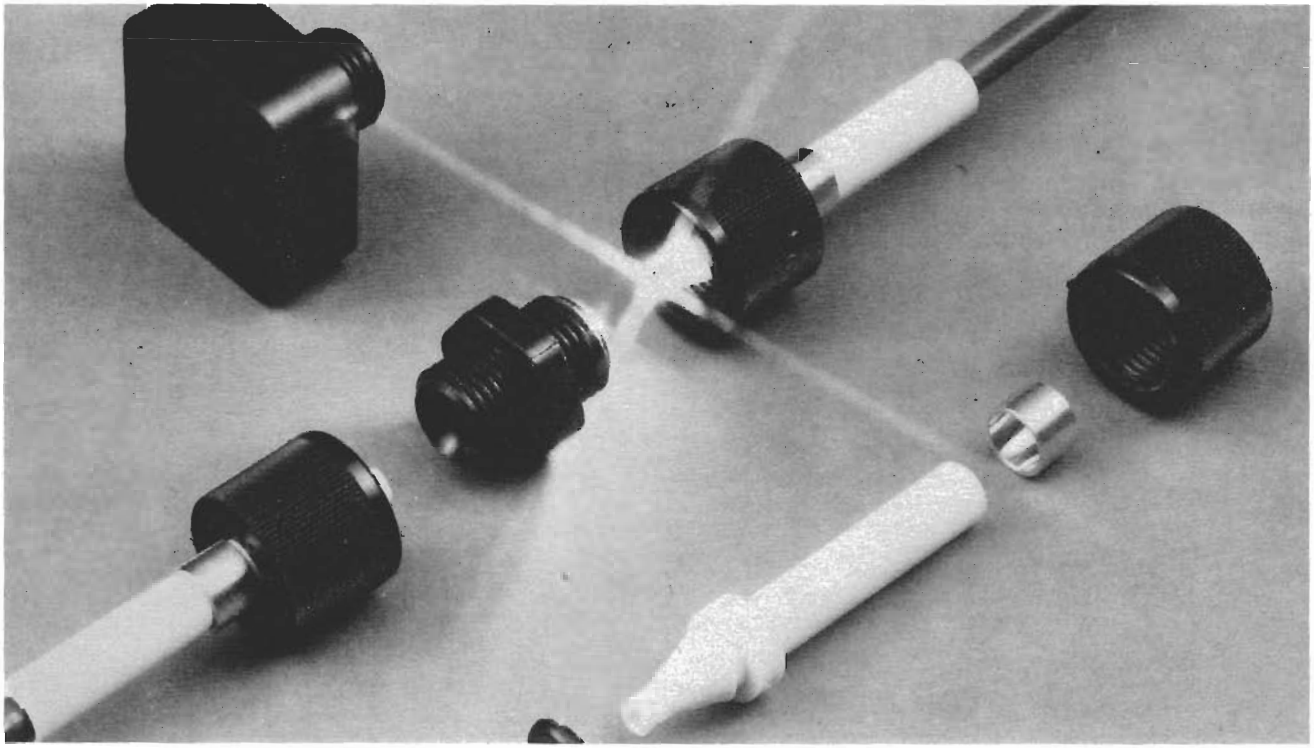

1. Plastic housing. This connector assembly can handle fiber bundles with diameters from 0.02 to 0.075 inch. The termination mates with a splice bushing for fibers (middle) or a bushing (top) that houses several standard light sources or detectors.

allowing it to set up instantly and lock the fibers.

Next, with the special bushing still attached, the bundle is polished by being wiped across three separate grades of sandpaper with abrasiveness ranging from 320 grit to 600 grit. Then the fibers are simply wiped clean and the polishing bushing discarded. Extra polishing gains only a couple of tenths of a decibel.

In terminating plastic optic fibers, as in the DuPont PFX bundle, the process is even simpler. There is no need to remove the jacket or immobilize the fibers with adhesive or epoxy—the jacket material extruded around the soft plastic fibers holds them tight enough. In fact, because the connector assembly is attached to the jacket with a crimp ring, the use of adhesive can be eliminated from the end-termination procedure entirely. The remaining procedure is then the same as for the more brittle glass-fiber bundles.

Mating bushings provide the necessary alignment mechanism for source-to-bundle and bundle-to-detector coupling. To protect the optical interfaces from contaminents, an O-ring seated on the ferrule engages the face of the bushing when the parts are mated.

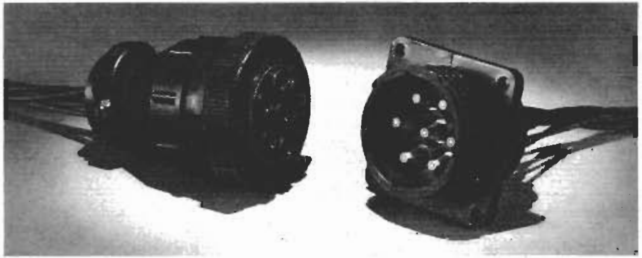

2. More than one. Without any modifications, several end terminations can be used to form multiposition connectors. With two fibers face to face in a splice bushing, insertion loss is about 3 decibels. This drops to 2 dB with an index-matching fluid.

DETECTORS

Inexpensive p-i-n photodiodes match fiber, source characteristics

by P. H. Wendland, R. M. Madden, and B. Kelly
United Detector Technology Inc., Santa Monica, Calif.

The receiver portion of any fiber-optic system requires a photodetector that responds strongly to both the peak output wavelength of the source and the low-loss spectral portion of the fiber cable used. Just as important is the match between the detector and its amplifier. On the whole, these needs in most emerging systems seem better served by p-i-n diodes than by either phototransistors or avalanche diodes.

Silicon phototransistors are inexpensive—typically less than $1 each in large quantities. But their slow speed limits system bandwidth to less than a few megahertz, their poor linearity restricts their dynamic light-level range to about three decades and, worst of all, internal noise is an order of magnitude greater than in p-i-n photodetectors.

Getting gain

Avalanche photodiodes combine optical signal detection with internal amplification of photocurrent. But unfortunately, they also amplify noise—the avalanche mode creates it, and it reduces the internal signal-to-noise ratio.

However, the devices have their uses at the higher frequencies, because above 1 MHz system noise limitations are set by the preamplifier and not the detector. Also, though future devices may operate at voltages below 100 volts, today's units now need 200 to 300 V, so that a high-voltage power supply is required, and often a constant-temperature chamber as well.

All the same, avalanche photodiodes could prove useful in pulse-code-modulated systems, where the absolute level of the analog signal is not of major importance and the highly regulated power supply and a constant temperature chamber might therefore prove unnecessary. In amplitude-modulated communications systems, however, the effect of environmental and particularly temperature changes on avalanche diode gain would cause considerable problems.

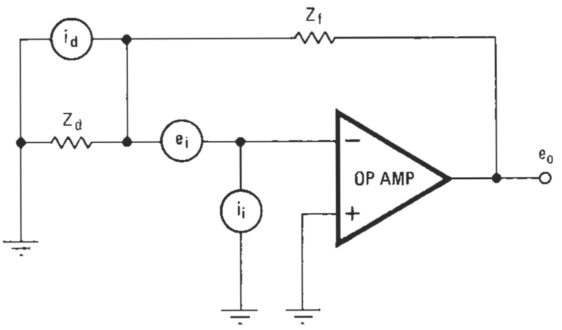

i_i = BIAS CURRENT
e_i = INPUT OFFSET VOLTAGE
i_d = PHOTODIODE CURRENT
Z_d = PHOTODIODE IMPEDANCE
Z_f = FEEDBACK IMPEDANCE

$$e_o = e_i \frac{(Z_f + Z_d)}{Z_d} + i_i Z_f + i_d Z_f$$

1. Team effort. Output current from a reverse-biased photodiode depends on its responsivity and the amount of light striking it. The output voltage of the combination is simply the product of the photodiode current and the feedback resistance.

High-performance p-i-n type silicon photodiodes have been in production for many years and cost less than $1 each. They exhibit nanosecond response times and can have a dynamic light-level range of 8 to 10 orders of magnitude at relatively low bias voltages. Their peak response between 850 and 950 nanometers matches well with the peak emissions of light-emitting diodes and the low-loss spectral regions of optical fibers.

These photodiodes are usually connected to a relatively low impedance to allow the photo-excited carriers to induce a photocurrent in the load circuit. (Photovol-

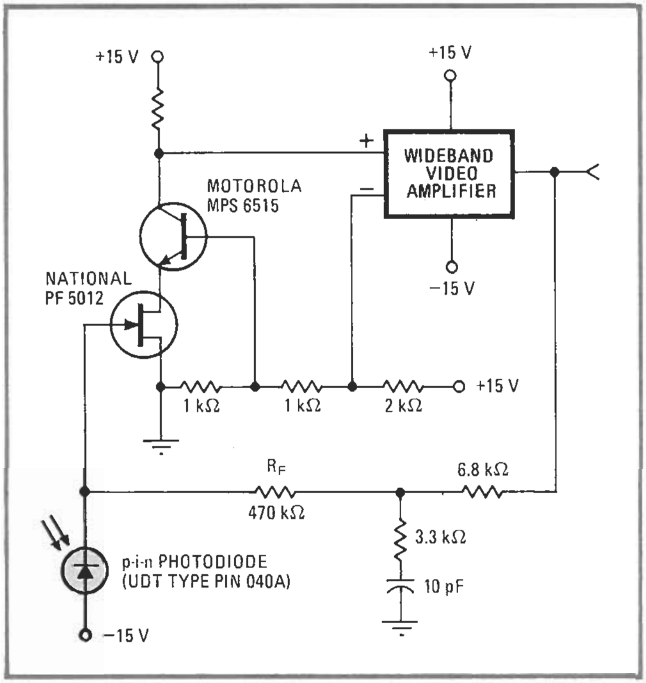

2. Typical circuit. The input field-effect transistor sets the overall noise performance of the photodetector-amplifier combination. Operating with 10-MHz optical-fiber links the circuit provides a signal-to-noise ratio of 5:1 for input power levels of 10 nW.

taic mode operation with open-circuited terminals is possible, but gives logarithmic outputs and a slow response.) Geared for systems of less than 10 MHz, 30-ns p-i-n photodiodes are commonly operated at bias voltages of about 15 V to reduce carrier drift time and lower diode capacitance without introducing an excessive dark current.

Operating a reverse biased p-i-n photodiode into a low-impedance operational amplifier (Fig. 1) provides maximum linear dynamic range and fastest response. The basic limitations of this circuit lie with the amplifier, not the detector. Present operational amplifier technology restricts the bandwidth to about 5 megahertz at input noise currents corresponding to light levels below 10 nanowatts.

A reverse-biased detector creates noise, however. There is the shot noise caused by detector dark current and signal current, the Johnson noise of the feedback resistor, and the input noise voltage of the amplifier. In wideband applications, the noise voltage of the amplifier, e_n, usually dominates. Its input noise voltage appears at the output, magnified by the ratio of the feedback resistance divided by the source impedance. At the higher frequencies, the capacitive reactance term of the source impedance predominates.

Critical components

Consequently, it's essential to minimize not only the input noise voltage of the preamplifier, but the input capacitance and noise bandwidth as well. Input capacitance has three components: amplifier input capacitance, detector capacitance and stray capacitance. The noise bandwidth is usually much larger than the signal bandwidth, and therefore it is essential that the amplifier bandwidth be made no greater than overall system constraints dictate.

Ideally, the preamplifier should raise the detector signal level to a magnitude that is easily manipulated by conventional analog or digital electronics without adding excessive noise or degrading the performance of the detector. The circuit shown in Fig. 2 typifies detector/preamplifier combinations available for use in fiber-optic systems.

The very low input impedance (10 to 50 ohms) of the transimpedance amplifier configuration is an ideal load line for the silicon p-i-n detector, assuring its linear operation and improving its frequency response. The amplifier, which acts as a current-to-voltage transducer, provides an output voltage equal to the photodiode current multiplied by the feedback resistance.

PROJECT OF THE MONTH

PHOTOTRANSISTOR RECEIVER MODULE

It's easy to squeeze miniaturized LED transistors and phototransistor receivers into 16-pin DIP modules with the help of 8-pin MINIDIP ICs. Figure A is a photo of an infrared transmitter and receiver assembled in this fashion. This project this month is a phototransistor receiver in a DIP module. Next month, we'll build a companion transmitter module.

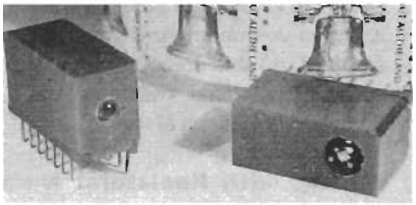

Fig. A. Miniature IR modules

Figure B is a circuit diagram for the receiver. In operation, photons impinging upon the phototransistor cause a small photocurrent to flow. This signal is passed by *C1* to the 741 op amp which has a gain (determined by *R2* and *R3*) of 1000. The amplified signal appears at pin 6 of the 741 where it can be coupled to another circuit or used to energize a small relay or drive a small speaker.

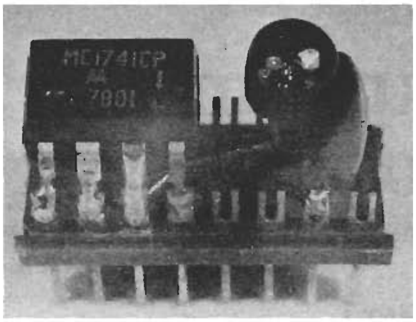

Fig. C. Phototransistor module.

Figure C is a photo of the interior of the receiver module, and Fig. D shows the assembly details. Begin assembly by installing all the resistors in the bottom of the module header and inserting their leads deep in each pin slot. Next, install *C1* and solder it and the resistors in place. Avoid using too much solder.

Next, clip off the base lead of the phototransistor and install it on the module header as shown in the figures. Make sure the collector and emitter leads are properly oriented before soldering them in place.

Place the pins of the IC adjacent to or inside the slots in the appropriate module header pins. Make sure they don't protrude too far or the module cover will not fit. Carefully solder the pins in place. Then remove excess solder from the outside edges of the header pins with a file. Finally, drill a 3/16-inch (4.8-mm) hole in the module cover directly over the location of the phototransistor and snap the cover in place.

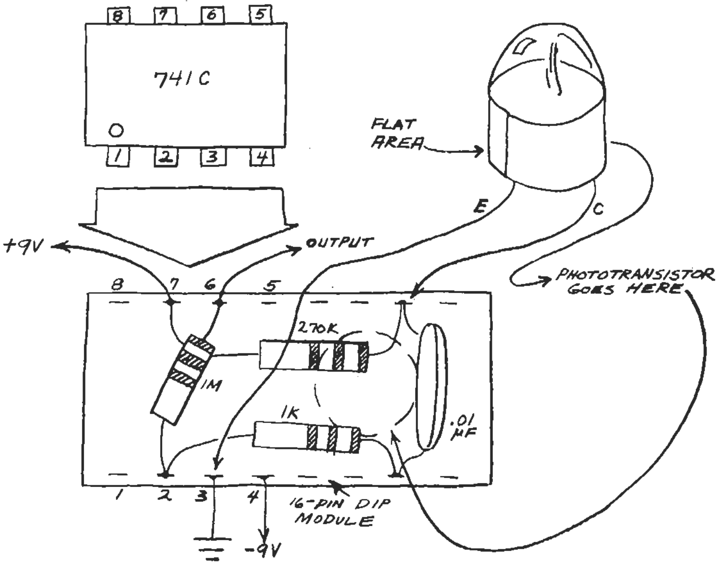

Fig. D. Assembly details of phototransistor receiver module.

Test the module by inserting it in a solderless breadboard and applying power from two 9-volt batteries via jumper leads. A small speaker or earphone connected to the receiver output through a 1000-ohm series resistor will emit a loud buzzing sound when the phototransistor is pointed toward a flourescent lamp. If you use an earphone instead of a speaker, use caution when conducting this test! The sound from the earphone can be *uncomfortably* loud. It's best to hold the phone near rather than inserting it in your ear until you've had some experience with the receiver.

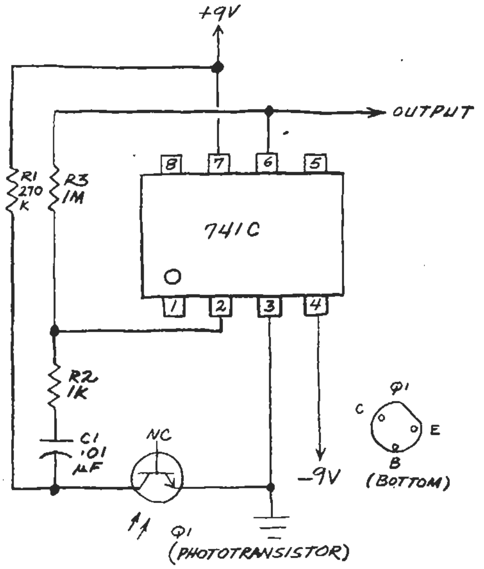

Fig. B. Schematic of an op amp phototransistor receiver.

After the module is working properly, try listening to the pulsating tone from multiplexed LED displays in digital watches, clocks and calculators with the receiver. You will also be able to "hear" lightning, vibrating car headlights, flickering candle flames and other modulated light sources. Finally, you will be able to use the receiver to detect the signal from the LED transmitter to be described next month. ◇

Experimenter's Corner

By Forrest M. Mims

THE PHOTOPHONE CENTENNIAL: 1880–1980

HAVE YOU ever talked over a sunbeam? I hope every reader of this column will do just that during 1980, for this is the centennial year of the invention of light-wave communications.

On February 19, 1880, Alexander Graham Bell and Sumner Tainter, Bell's lab assistant, became the first men to transmit voice over a beam of reflected sunlight. One kind of transmitter they developed, shown in Fig. 1, was a thin, silvered mirror attached to one end of a hollow cylinder. Sound waves were directed against the mirror through a speaking tube. The resulting vibrations of the mirror caused a reflected beam of sunlight to become more or less divergent. The net result was an amplitude-modulated light beam.

Bell's receiver consisted of a series of selenium cells mounted in the focus of a parabolic reflector and connected in series with a telephone receiver and a battery. Figure 2 shows one of Bell's early optical receivers.

Bell called his invention the *photophone*. In June of 1880, he and Tainter transmitted intelligible voice from the top of the Franklin School in Washington, D.C. to Bell's laboratory at 1325 L Street, a distance of 213 meters. Later Bell and Tainter were granted several patents covering the photophone and its variations. Until his death in 1922, Bell considered the photophone to be his most important invention, more important even than the telephone.

If you would like more information about the photophone, I've written a detailed paper on the subject which appears in the Spring edition of *Optics News*, a publication of the Optical Society of America (available at well-stocked libraries). Also, if you happen to be in Washington, D.C. this spring or summer, stop by Explorer's Hall, the museum of the National Geographic Society at 17th and M Streets, N.W., to see their excellent photophone centennial exhibit. It was constructed by Bell Telephone Laboratories, and traces the history of light-wave communications from the photophone to today's glass-fiber communication links.

Alexander Graham Bell played a pioneering role in the early history of the National Geographic Society. His grandson, Dr. Melville Bell Grosvenor, is Editor Emeritus of the *National Geographic*. Several years ago, when I met with Dr. Grosvenor to propose a photophone-centennial exhibit, his interest perked up considerably when I pulled a homemade photophone from my briefcase. He scurried out onto the balcony to catch a few rays of sunlight, and we were soon communicating over his grandfather's invention.

That was a very exciting moment for me, and one I hope to share with you by means of this column. You can be "on the air" in a matter of minutes with an aluminum-foil-and-cardboard transmitter and a receiver made from a solar cell and a portable amplifier! With your own photophone, you'll never be without an entertaining and educational gadget to demonstrate for friends, neighbors, scout troops and school classes. Indoors, at night, or when clouds obscure the sun, you can use light from an artificial source. I've used many kinds of flashlights, a helium-neon laser, infrared LEDs and a continuously operating (CW) injection laser with good results. Interested? Here are some details.

Photophone Transmitters. Bell and Tainter devised many ways to modulate a light beam, but the simplest is the use of a flexible mirror. My favorite photophone transmitter, shown in Fig. 3, is a 25-mm diameter, ultra-thin glass mirror cemented to one end of a 1" (25.4 mm) diameter aluminum tube. The mirror is catalog number 30,626, available from Edmund Scientific Company (300 Edscorp Bldg., Barrington, NJ 08007).

A larger mirror will give more range, but suitable glass mirrors are hard to find and are very fragile. Bell solved this problem by using a system of lenses to collect more light than would otherwise be intercepted by the mirror alone (see Fig. 1). You can take this approach also, but a suitable alternative is the use of a mirror fabricated from aluminum foil or aluminized Mylar.

A powerful transmitter can be made by taping a sheet of foil or Mylar over one end of a metal can from which both ends have been removed. The Mylar is easier to attach and forms a highly desirable flat, drum-like surface. Unfortunately, aluminized Mylar, at least the type which I've used, is not quite as reflective as aluminum foil. A simple test shows that about 5% of incident sunlight passes through the thin film of aluminum deposited on the Mylar and is therefore not available for reflection.

Aluminum foil is almost perfectly reflective, but it tears easily. Another problem with foil is the difficulty of obtaining a perfectly flat surface. Both of these problems can be partially alleviated by crossing strips of masking tape across the dull side of a sheet of foil (use four strips) and centering the shiny side of the foil out over the end of the can. The tape reduces tearing, keeps the foil reasonably flat and improves the sound quality by damping out resonances.

Instead of a metal can, the Mylar or foil can be taped over a 4" to 6" (10-cm to 15.25-cm) diameter hole cut in a square of corrugated cardboard. This method works well with foil because it results in less chance of tearing.

You can experiment with other kinds of transmitters. Several years ago, at a hot-air balloon competition in New Mexico, Otis Imboden, a *National Geographic* photographer, and I experimented with a large foil-covered board he was using to reflect sunlight at balloon crews that were shadowed by the huge bags of hot air rising above them.

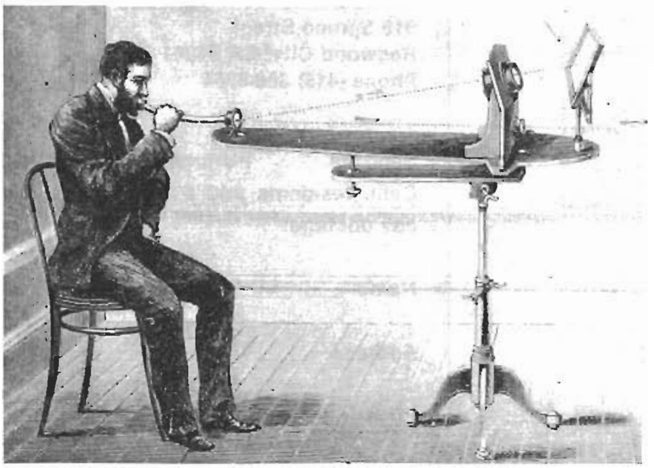

Photos courtesy Bell Labs.

Fig. 1. The photophone transmitter used by Bell and Tainter in their historic experiment of 1880.

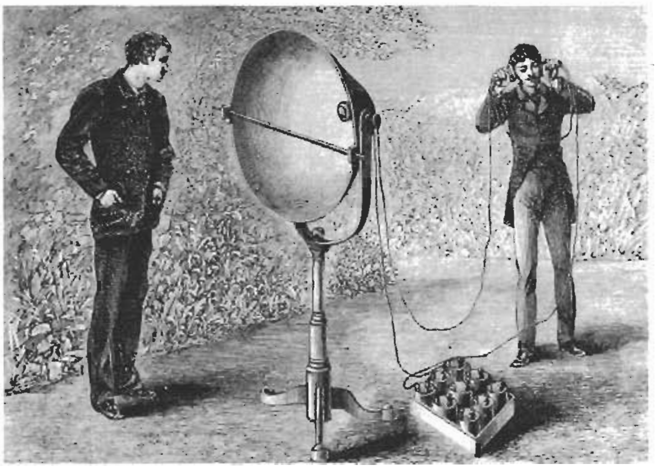

Fig. 2. A photophone receiver of 1880. The detector is the cylindrical object in the reflector.

We found that we were able to send voice messages to a nearby receiver simply by talking near the reflector. Later, we gave a receiver to a balloon crew. Otis spoke to the pilot with the help of his reflector while the balloon was in tethered flight.

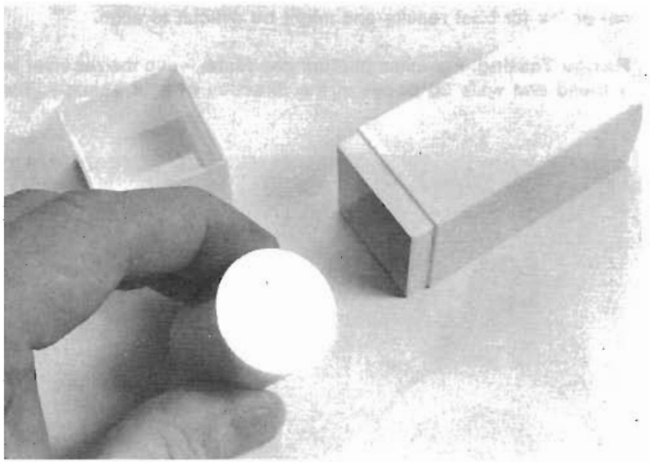

Fig. 3. A photophone transmitter is easily made using a 25-mm diam. mirror cemented to an aluminum tube.

Passive transmitters like those described thus far work fine, but you can make an electronic photophone transmitter by cementing a thin glass mirror to the rim of the cone of a miniature speaker. Refer to the Edmund Scientific catalog for suitable mirrors. This technique results in very high quality voice transmission and allows one person to conduct photophone tests unassisted because the transmitter can be driven by signals from the earphone or external speaker jack of a portable radio or tape player.

Photophone Receivers. Bell and Tainter experienced considerable difficulty making selenium detectors for their photophone experiments, but today you can purchase for a few dollars a silicon solar cell that's considerably more sensitive and easier to use. I prefer silicon solar cells for photophone receivers because their large surface area (the larger the better) reduces or eliminates entirely the need for collecting lenses or reflectors for short-range experiments. When a lens or reflector is used to increase communications range, the greater area of the detector does away in large part with the alignment difficulties associated with the use of small detectors such as phototransistors.

An ultra-simple receiver can be made by connecting a silicon solar cell directly to the microphone input of an audio amplifier. Figure 4 is the schematic of a circuit with plenty of gain that works quite well. Rather than building an amplifier, you can salvage one from a discarded cassette recorder or purchase a factory-assembled amplifier module from one of the dealers who advertise in this magazine.

Silicon solar cells are very thin and are easily broken. One way to protect a cell is to install it in a clear plastic box or container like that

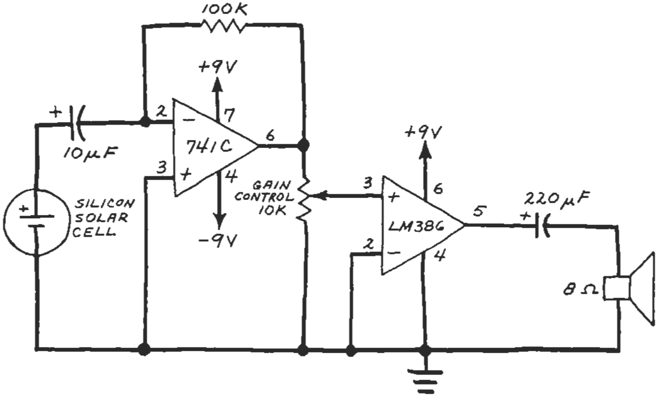

Fig. 4. Schematic of a high-gain photophone receiver.

in which a typical cell is packaged when sold. A layer of plastic foam behind the cell will cushion it from shock, and a small notch or hole can be easily formed for the leads.

Some solar cells are supplied with wire leads. Others are not. If you must attach your own leads, use a small, low-wattage iron with a well-tinned tip. For best results, use tinned wrapping wire for leads. Most silicon cells have electrodes on the front and back surfaces. Solder the back electrode first by forming a small puddle of solder near an edge of the cell and then holding the stripped end of a wire lead in the solder until it cools.

The front electrode is usually in the form of a thin strip and requires more care. Touch the tip of the iron to the electrode and, after a second or two, apply enough solder to form a small bump or ridge. Then reheat the solder and position the second wire lead along the electrode. Hold the lead in place until the solder cools.

The leads, particularly the one soldered to the front electrode, must be protected from excessive strain. One way to do this is to attach the leads directly to the cell's protective housing with glue or miniature solder lugs. A shielded cable can then be connected to the leads or lugs.

Your mounting problems will be simplified if you install the cell in a reflector or behind a lens. Alignment of the receiver will be much easier if you use the reflector rather than a lens. Various types of reflectors are available from Edmund Scientific, but I prefer to modify ordinary flashlights. For example, the reflector in a typical 6-volt lantern has plenty of room for two solar cells connected in series and mounted back-to-back. The battery compartment has more than enough space for a modular amplifier, miniature speaker, battery, switch, gain control and phone jack.

Figure 5 shows a photophone receiver and a LED voice transmitter installed in 6-volt lanterns (Burgess "Dolphin" brand). I made the receiver in 1966, and it's worked fine ever since. The solar cells are secured in place, perpendicular to the axis of the reflector, by wrapping their leads around the protruding shoulder at the small opening in the reflector. While this mounting method might appear to be very flimsy, my cells have survived a trip around the world (including a one-year stint in Vietnam) and numerous field tests of various light-wave communications devices. The cells simply bounce upon their leads when the receiver is dropped or jostled.

I recommend one or more silicon solar cells for your photophone receiver, but you can use selenium cells, phototransistors or photodiodes instead. Keep in mind that small detectors will require external optics for best results and might be difficult to align.

Range Testing. For initial photophone tests, leave the receiver with a friend and walk 25 paces in the direction of your shadow. Then, while facing the receiver, point the transmitter toward the ground in front of you until the sun's reflection is visible as a bright spot. It's a simple procedure to slowly move the spot toward the receiver by following the spot of light along the ground.

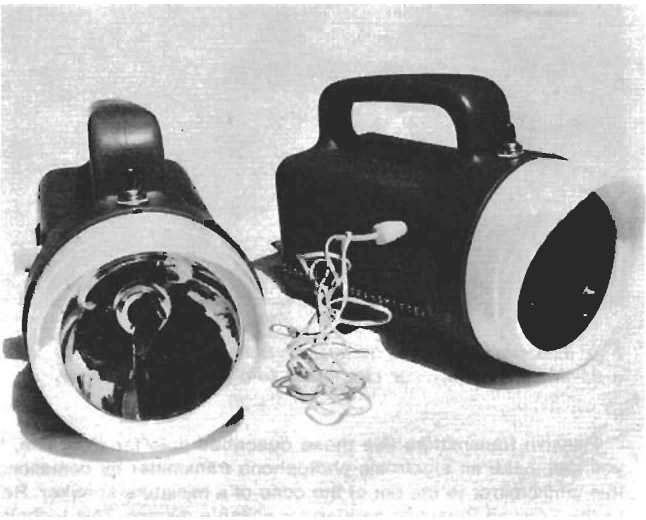

Fig. 5. Photophone receiver (left) and LED voice transmitter installed in 6-volt lantern lights. Note the position of the two back-to-back solar cells in the receiver's reflector.

It's helpful to place the receiver in a shaded location so the reflected spot will be easier to see. A trick I usually employ is to place a large red bicycle reflector next to the receiver. When the reflector lights up, the transmitter is on target. Here's another tip: placing the receiver *inside* a building and directing the transmitter beam through a window makes for an impressive demonstration because the voice of the person at the transmitter can be heard only via the light beam and *not* by the propagation of sound waves through the air.

While testing a photophone, you'll soon discover some difficulty in keeping the reflected spot of sunlight trained on the receiver. One way to stay on target is to rest the transmitter against a fixed object like a tree, fence post, or building. A better way is to mount the transmitter on a photographer's tripod. Of course, the receiver must be kept in a fixed location. You'll also need to make frequent adjustments to compensate for the earth's rotation, which manifests itself as the apparent continuous motion of the sun.

Once you have an operational photophone, you'll probably want to determine its maximum transmitting range. For long-range tests, a tripod is essential. An electronic transmitter (i.e., a speaker with attached mirror) is very helpful also, because one person can perform the test unaided. It's very easy to achieve a range of 100 meters or more. For ranges of one kilometer or more, the photophone receiver I described in the February 1976 issue of POPULAR ELECTRONICS is ideal. This receiver uses a large glass reflector installed in a special cabinet complete with amplifier and solar cell. Though very difficult to align, the receiver has exceptional sensitivity. If you don't have this article in your back issues, you can find it at a library. It's also in the 1980 ELECTRONIC EXPERIMENTER'S HANDBOOK.

In Conclusion. The photophone will allow you to explore the fascinating world of light-beam communications. However, remember one word of caution. Always avoid staring at the bright reflection of sunlight from photophone transmitters! Protect your eyes by wearing sunglasses with optical-quality glass lenses and by looking away from the transmitter mirror. ◇

ANALOG DATA TRANSMISSION SYSTEM*

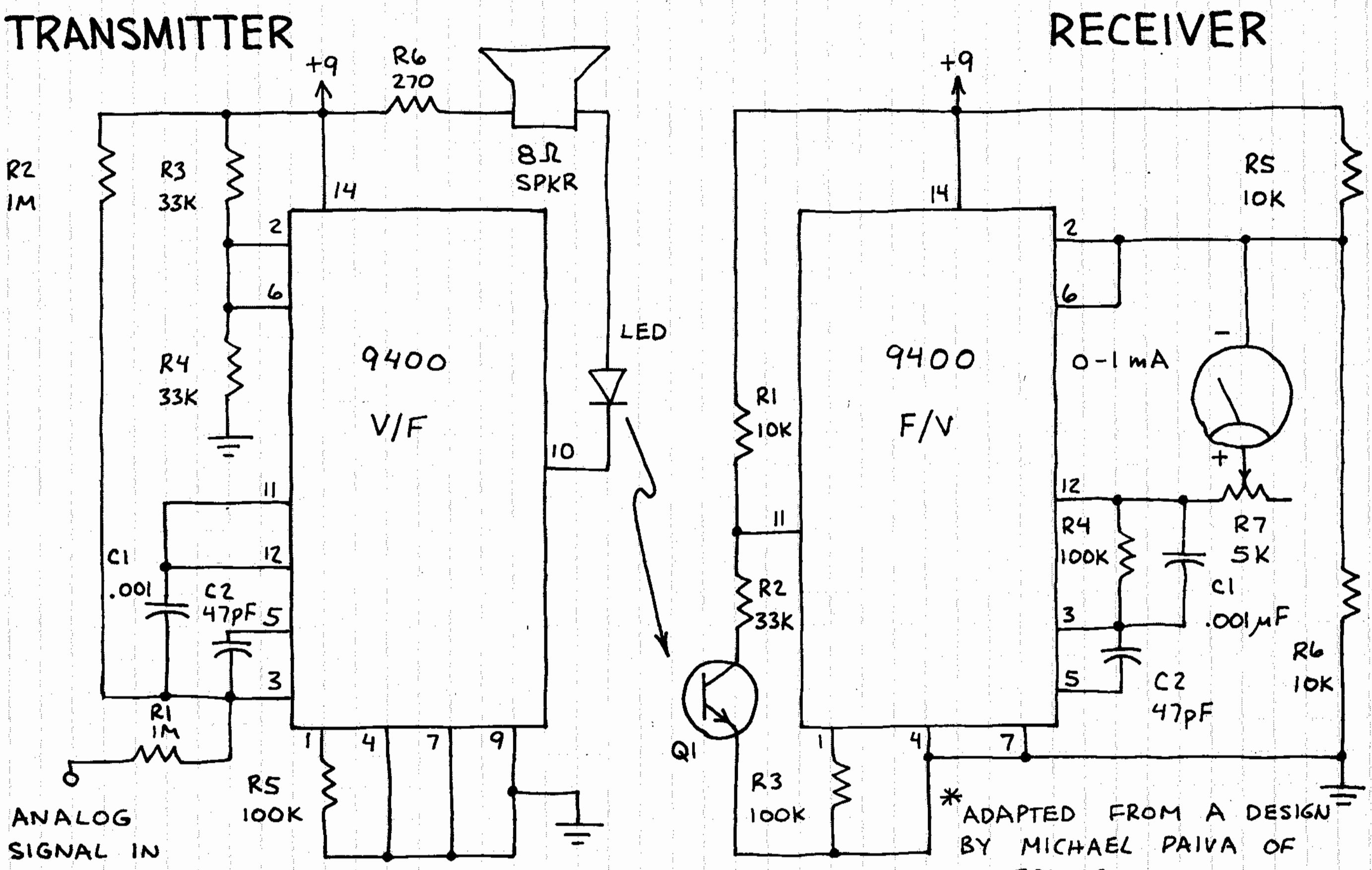

*ADAPTED FROM A DESIGN BY MICHAEL PAIVA OF TELEDYNE.

THE SPKR IS OPTIONAL BUT MAY PROVE HELPFULL DURING INITIAL TESTING. USE AN INFRARED LED (RADIO SHACK 276-142). Q1 CAN BE THE PHOTOTRANSISTOR SUPPLIED WITH THE LED OR RADIO SHACK 276-130. R7 IN THE RECEIVER IS ZERO ADJUST.

Photoconductive cell application design handbook.

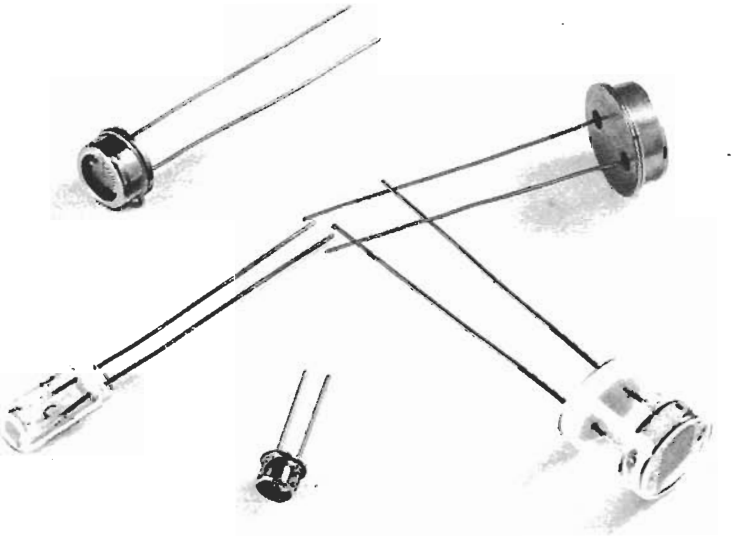

CLAIREX ELECTRONICS

THE DESIGN ENGINEER will find this publication a useful guide in situations involving light control. Over seventy different types of photoconductive cells, the industry's most complete line, are described with extensive physical and electrical data given for each in both graphical and tabulated forms.

A selection of typical circuit diagrams will also offer some assistance. Although these standard cell types are calculated to suit most needs, special units are developed on request; feel free to consult Clairex or its representatives whenever your particular requirements dictate.

CLAIREX has considered the research, development and manufacture of high quality CdS and CdSe photoconductive cells its sole basis of operation for the last decade. The corporation acquired the title of oldest manufacturer of these cell types as a birthright; its industry-wide reputation as the prime producer of reliable light-sensitive components, however, has been earned through efficient, creative service to the country's leading companies. Clairex invites you to its facilities the next time you visit New York.

If a special photocell is required, Clairex has over seventeen years experience designing cells to customer specifications. These have involved many variations on standard cells in Clairex' hermetically sealed packages. Extensive modifications of cells to obtain a desired conductance at a particular light level, unusual voltage ratings, and special sensitive area configurations have also been accomplished.

In some special cases it became necessary to modify the spectral response of the cells to suit a particular design situation. This involved the development of a modified photoconductive material.

Where special cells may be required, consultation is always advisable prior to submission of a detailed cell design for quotation. Such consultation will help assure that the design is within the state of the art.

Occasionally component parts and tooling will exist which are adaptable to a particular special requirement. However, the design engineer would serve his purposes best by attempting to use standard cells wherever possible and thus avoid the delay and expense necessarily involved in any special manufacturing operation.

CONTENTS

IMPORTANT

Specific cell data on individual types is on separate, loose leaf sheets that are included with this design manual.

Printed in U.S.A.
Clairex is a registered trademark

PHOTOCELL DESIGN, THEORY AND APPLICATIONS

This section will describe the basic operation of photoconductive cells and provide a step by step objective outline of the design considerations in selecting the appropriate cell for a specific application. Every effort is made to define the terms and discuss the theory used so that the designer will be able to extract technical data provided in this manual and accompanying data and apply this information in specifying a photoconductive cell.

[illegible] PHOTOCONDUCTORS

Photosensors

Today there are (4) basic types of photosensors in use. Photo emissive, photovoltaic, photoconductive junction type and photoconductive bulk effect. The purpose of this manual is to discuss primarily the CdS and CdSe bulk effect photoconductors.

The photo emissive type measures light by the emission in a vacuum of one electron per photon impinging on a metal photo cathode. Photo multipliers having successive stages using secondary emissions are used to amplify the electron current.

The photovoltaic type generates a voltage across a pn junction as a function of the photons impinging on it. This class is usually made of Selenium or Silicon and is the only self-generating type, thus requiring no external power supply.

Photo diodes and photo transistors represent the "junction type" photoconductors. The resistance across the semiconductor junction changes as a function of light falling on it. They are very fast in response but limited in sensitivity due to the small area of the junction.

Photoconductive cells bulk effect are normally made of Cadmium Sulfide (CdS) or Cadmium Selenide (CdSe). Unlike the junction types, they have no junction. The entire layer of material changes in resistance when it is illuminated. In this respect it is analogus to a thermistor except the heat is replaced by light. The photoconductive cell decreases in resistance as the light level increases and increases in resistance as the light level decreases. The absolute value of resistance of a particular cell at a specific light level depends on the photosensitive material being used, cell size, electrode geometry, and on the spectral composition of the incident light.

Although photoconductors require an

Photocell Design, Theory and Application

external power supply, a sensitivity 1000 times greater than the photovoltaic class more than compensates in most applications. The photoconductor's sensitivity to steady light is 1,000,000 times that of the photo emissive type and equal to that of the photomultiplier, without the burdensome necessity of a high voltage power supply required by the latter. Photo diodes and transistors have faster response times than CdS and CdSe photoconductive cells but their poor sensitivity to light limits their use to those applications where relatively high illumination is available.

Cadmium sulfide (CdS) and cadmium selenide (CdSe) are the two materials most widely used in photoconductive cells. Clairex specializes in the manufacture of photoconductive cells using CdS and CdSe as the base materials. From these two compounds Clairex has developed a number of materials in order to provide the best possible characteristics for a wide variety of applications.

Design Criteria For Selection of Photoconductive Cells

The selection of a photocell for a specific application requires the determination of two distinct groups of parameters. The first of these will allow the designer to choose the exact photoconductive material which is best suited for his application. The second group of parameters will allow for the determination of the physical configuration of the photocell. Clairex offers (7) varieties of CdS and CdSe materials and five different cell configurations. In addition, Clairex provides a wide choice of power and resistance ratings.

SELECTION OF PHOTOCONDUCTIVE MATERIAL

Spectral Response

The relative sensitivity of a photoconductive cell is dependent on the wavelength of the incident light.

Each photoconductive material has a unique response curve which indicates the portion of the light spectrum it is sensitive to. Figure 1 and Figure 2 are typical spectral response curves for two Clairex materials.

From these curves it can be seen that material 2 has its peak spectral response at 5150 Angstroms and material 3 at 7350

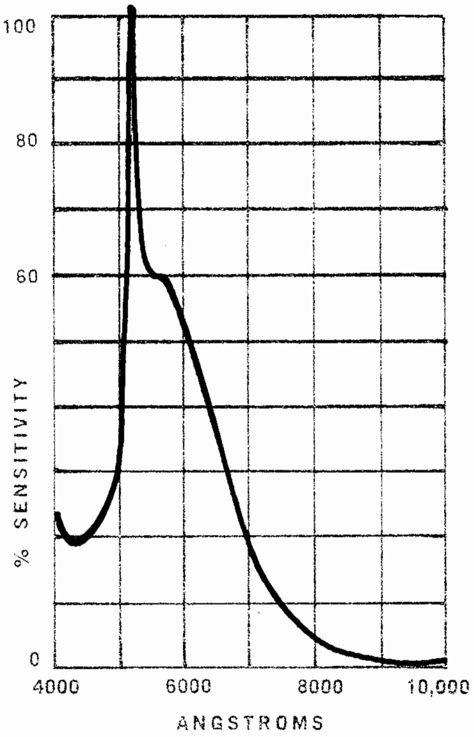

Figure 1

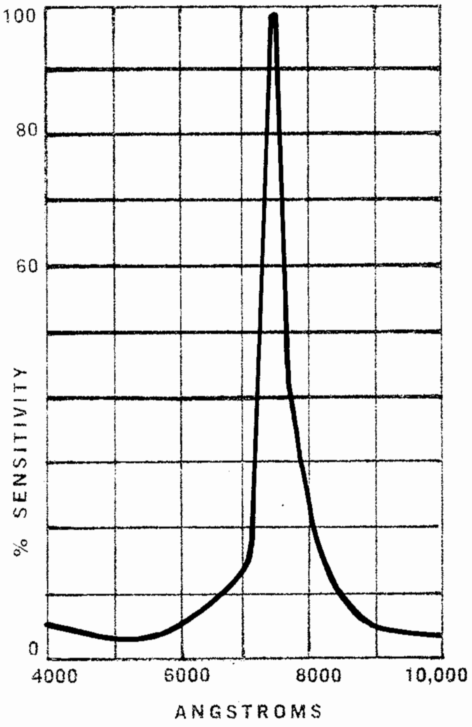

Figure 2

Angstroms. This indicates that material 2 is most sensitive to light in the blue-green spectrum and material 3 is most sensitive to light in the red near IR region.

In designing it is important to choose a photoconductive material and/or light source which will provide maximum relative sensitivity. Relative sensitivity is the ratio of cell conductance at the light wavelength being employed to the cell conductance that would be obtainable had the wavelength of the light source used been exactly equal to the peak wavelength of the material. This is expressed in Figure 3.

Color Temperature Response

In most applications, monochromatic light sources are not used. More commonly we find incandescent, neon, or sunlight. Thus the overall response to a continuous light source becomes very important. If the photocell must operate over a varying color temperature range, a cell must be picked which is the least sensitive to varying color temperature. In other words, it should have a "flat color temperature response." On page 13 the curves illustrate this variation with the different materials. Applications that require the cell to operate in a high stray light ambient which differs in color temperature from the signal light, require cells with non flat response. An example would be a fluorescent ambient with a tungsten signal light. Here a CdSe cell solves the problem with its much higher response to the lower color temperatures of tungsten lights.

The curves also illustrate the need for close control of color temperature in all test fixtures, this can become a major source of poor correlation in testing results.

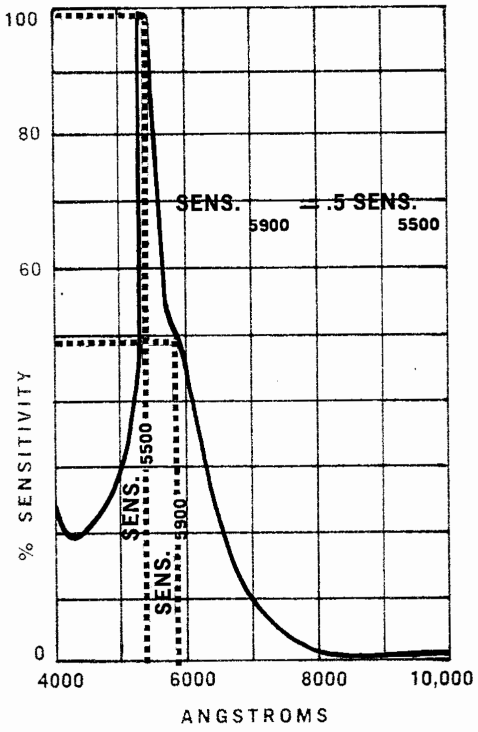

Figure 3

Sensitivity

The sensitivity of a photocell can be assessed only as related to an application and circuit.

Most broadly, cell sensitivity is the relationship between the light intensity impinging upon the sensitive area of the cell and the signal output of the cell in the circuit.

In a simple relay circuit (cell, power supply, and relay all in series), the output desired is relay current. Thus, a cell is most sensitive which for a given light level will pass the most current—the cell with lowest resistance.

Where the cell 'drives' a tube grid, the cell-circuit output desired is a voltage into an essentially open circuit. Here, a cell must be capable of withstanding a large voltage change and dissipation considerations dictate a high resistance cell.

Where the light signal input is a small change in illumination, sensitivity is primarily related to the slope of the cell resistance vs. light intensity curve.

The specific photoconductive material used will determine the resistivity, and the slope and linearity of the resistance curve. The actual resistance of a specific cell is a function of the geometry of the active area within the cell.

In choosing a photocell, the application for which the cell is to be used will determine which parameter is of prime importance. For example, where the cell is to be used in a switching application the greater the slope of the resistance characteristic (versus light level) the faster will be the switching action.

Depending on the specific material which is used the ratio of dark to light resistance varies in Clairex cells from 100:1 to 10,000 to 1. In determining the resistance ratio it is necessary to specify at what time after the light is removed the dark resistance is measured. Clairex specifies five seconds dark, after exposure to 2 ft-c.

A perfectly linear photoconductive material is one in which a given percentage change in light level will result in the same percentage change in resistance over the entire range of illumination. While no material can be perfectly linear, Clairex Type 5H material exhibits the most linear characteristic over the widest light level range.

In general, CdSe cells are super linear below 1 ft-c and become sub linear above. All CdS/CdSe photoconductors become less linear as the light level is increased, until in the 10,000 foot-candle range they are almost asymptotic.

Linearity of resistance with changing light levels suggests a whole family of applications in the meter and control areas.

Temperature Coefficients

The temperature coefficients of photoconductors are rather unique, as they are a function of light as well as material. CdS cells have the lowest coefficient and in general their resistance changes inversely with temperature change. CdSe cells have considerably higher coefficients and their resistance varies directly with temperature. As was stated earlier, the coefficient is also a function of light intensity. The coefficient varies as an inverse function of light level. Thus to minimize temperature problems, it is desirable to work the photocells at the highest light level practical.

Photocell Resistance

The resistance of a photocell is a function of the basic material resistivity and total active area. In general, CdSe materials are considerably lower in resistance than CdS materials when used with conventional light sources. An example would be Clairex Type 4 material which is 33 times lower in resistance than Type 2 material. The second factor is the active area of the photoconductor, which is determined by the physical size and the electrode configuration. By todays evaporation techniques it is possible to deposit electrodes in very fine patterns which allow exposure of a large area of the cell surface and very close electrode gaps. This technique allows low resistance in small size cells, however the close spacing requires lower voltage ratings. To obtain low resistance and high voltage rating, it is necessary to have a large photocell substrate with big electrode gaps.

On page 11, the basic material resistivity curves are shown with the various factors for different electrode configurations.

Speed of Response

Speed of response of a photoconductive cell is the time required for the current to increase after the cell has been illuminated (rise time) and the time required for the current to decrease (resistance increase) after light has been removed. (Decay Time). In general, in this manual, turn on time is measured from the beginning of illumination to the time it takes the current to reach 63% of its final value. Response time can be measured over any specific resistance range which is desired. All cells exhibit faster response times with increased illumination, with CdSe cells being normally faster than CdS.

Light History Effects

In common with all known light sensors, photo-conductors exhibit a phenomenon which has been called fatigue, "hysteresis," "light memory," "light history effect," etc.

The phenomenon takes the following form: the present or instantaneous conductance of a cell at a specific light level is a function of the cell's previous exposure to light and of the duration of this exposure. The magnitude of the effect depends on the present light level, on the difference between present and previous light levels, and on the durations of previous and present exposure. The sense or direction of the effect depends on whether the previous level was higher or lower than the present one.

An example will help clarify this last statement: a cell kept at the test light level will attain an equilibrium conductance. If this cell is kept at a lower light level or in total darkness for some time and then checked at the test level; its conductance will be greater (than the equilibrium value) and will decay asymptotically to the equilibrium value.

Conversely, if the cell is kept at a higher light level and then checked at the test level, initial conductance will be lower and will rise asymptotically to the equilibrium value. The higher the test level, the more rapid is the attainment of equilibrium.

The magnitude of the effect is larger for Cadmium Selenide than for Cadmium Sulphide; but the selenides tend to reach equilibrium more rapidly.

Naturally, this phenomenon must be taken into consideration in applying photoconductive cells.

The "light history effect" (preferred term) is a definite hindrance in the use of photo-conductive cells for the measurement of light levels. For the continuous measurement of light levels which may range in a random manner from darkness to very high light levels, precision is limited at any light level to the magnitude of the "light history effect" for that level.

For intermittent measurements, the effect of 'light history effect' may be virtually eliminated by keeping the cell in a constant light environment between measurements. For best results, a light level environment within the range of interest should be chosen.

Photocell Selection

Once the photoconductive material is chosen it is then necessary to choose the appropriate physical package. In selecting a physical package the designer must take into consideration not only mechanical requirements but also the electrical ratings of the cell for appropriate circuit compatibility.

Maximum Cell Voltage

In specifying a photocell, care must be taken to insure that the voltage applied to the cell does not exceed the maximum allowable. Due to the fact that the maximum voltage is normally across a cell when it is in the dark, the voltage rating is measured with no illumination on the cell.

Summary

To properly select the best photocell for your application, it is important to understand the previous pages. Then examine the following charts and graphs to pick out the photocell closest to your design requirements.

PHOTOCONDUCTIVE MATERIALS

Wavelengths In Angstroms

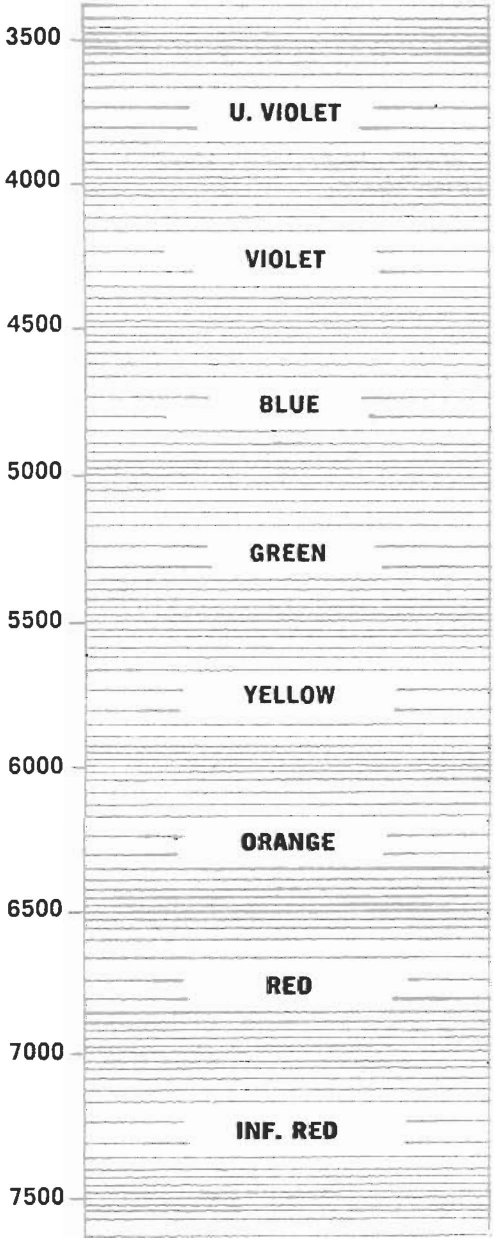

TYPE 2 CdS, peak spectral response 5150 angstroms, bluest response photosensitive material, high stability, lowest temperature error. Can be used in applications requiring sharp differentiation in the blue green spectrum. For use with either fluorescent or incandescent lamps.

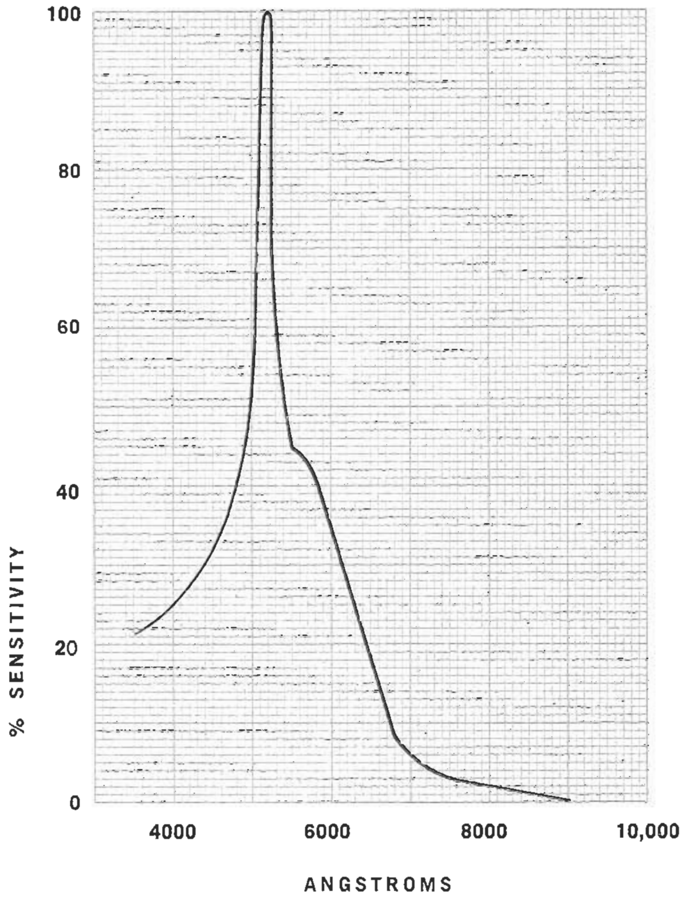

Variation of Conductance With Temperature and Light

Foot Candles	.01	0.1	1.0	10	100
Temperature	% Conductance				
−25°C	85	103	106	107	107
0°C	94	100	101	102	104
25°C	100	100	100	100	100
50°C	98	96	98	97	97
75°C	86	92	98	97	96

Response Time Versus Light

Foot Candles	.01	0.1	1.0	10	100
Rise (Seconds)*	1.410	.330	.066	.017	.006
Decay (Seconds)**	.570	.085	.022	.008	.005

*Time to (1 - 1/e) of final reading after 5 seconds Dark adaption.

**Time to 1/e of initial reading.

TYPE 3 CdSe, peak spectral response 7350 angstroms, fast response, and very high light-to-dark resistance ratio. Can be used for high speed switching or counting. Sensitive to near infra red. For use with incandescent or neon lamps.

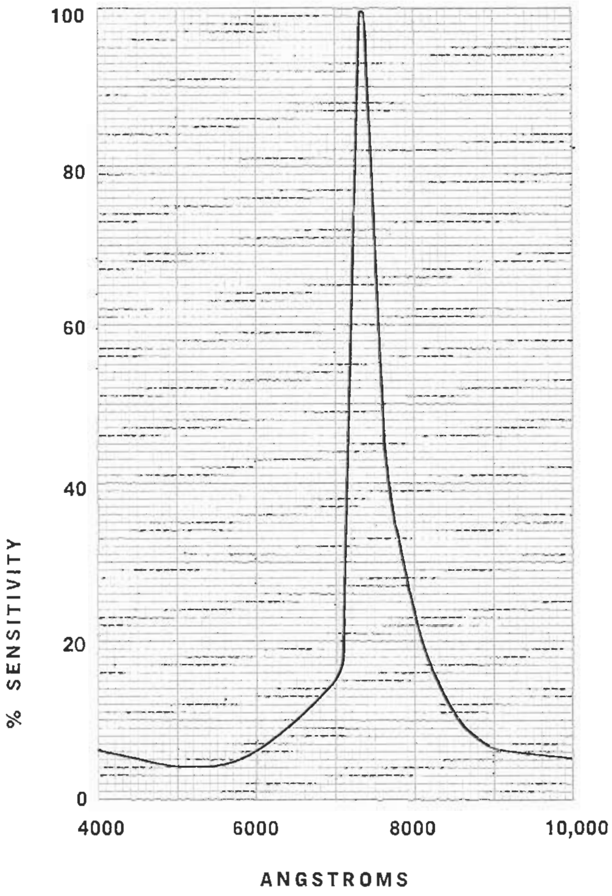

Variation of Conductance
With Temperature and Light

Foot Candles	.01	0.1	1.0	10	100
Temperature	% Conductance				
–25°C	1070	320	172	116	109
0°C	500	230	140	110	108
25°C	100	100	100	100	100
50°C	43	30	57	79	87
75°C	44	20	25	42	62

Response Time Versus Light

Foot Candles	.01	0.1	1.0	10	100
Rise (Seconds)*	.350	.070	.020	.005	.002
Decay (Seconds)**	.045	.015	.009	.006	.002

*Time to (1 - 1/e) of final reading after 5 seconds Dark adaption.

**Time to 1/e of initial reading.

TYPE 4, CdSe peak spectral response 6900 angstroms, lowest resistance photocells available. Can be used for "on-off" applications when low resistance is desired. For use with incandescent or neon lamps.

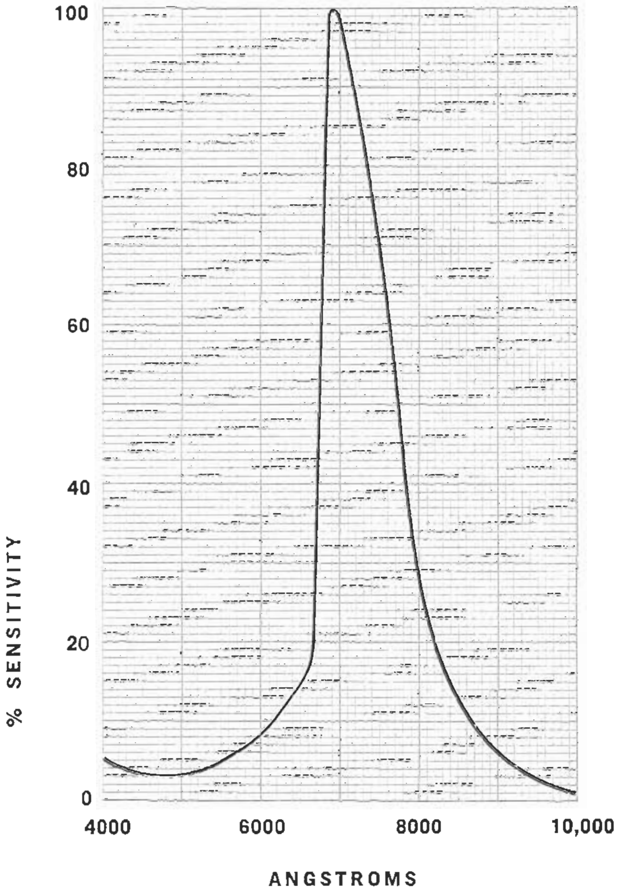

Variation of Conductance
With Temperature and Light

Foot Candles	.01	0.1	1.0	10	100
Temperature	% Conductance				
–25°C	220	138	114	97	95
0°C	166	118	110	100	99
25°C	100	100	100	100	100
50°C	53	70	83	95	96
75°C	23	30	57	80	85

Response Time Versus Light

Foot Candles	.01	0.1	1.0	10	100
Rise (Seconds)*	1.780	.430	.088	.023	.005
Decay (Seconds)**	.160	.047	.030	.015	.008

*Time to (1 - 1/e) of final reading after 5 seconds Dark adaption.

**Time to 1/e of initial reading.

DATA SHEET 100 / ITD 8-70

ORDERING INFORMATION

The following photocells represent the current standard types available from stock.

CL-500 SERIES

CL502
CL502L
CL503
CL504
CL504L
CL505
CL505L
CL507

CL-5M SERIES

CL5M2
CL5M2L
CL5M3
CL5M4
CL5M4L
CL5M5
CL5M5L
CL5M7

CL-600 SERIES

CL602
CL603
CL603A
CL603AL
CL604
CL604M
CL604L
CL605
CL605L
CL607
CL607L

CL-700 SERIES

CL702
CL702L
CL702L/2
CL703
CL703A
CL703M
CL703L
CL703/2
CL703L/2
CL704
CL704L
CL704L/2
CL705
CL705L
CL705/2
CL705L/2
CL705HL
CL707
CL707L
CL707H
CL707HM
CL707HL

CL-900 SERIES

CL902
CL902L
CL903
CL903A
CL903N
CL903L
CL904
CL904N
CL904L
CL905
CL905N
CL905L
CL905HN
CL905HL
CL907
CL907N
CL907L
CL907HN
CL907HL

OBSOLETE TYPES

TYPE	REPLACEMENT
CL402 (S)*	CL602
CL403 (S)*	CL603
CL404 (S)*	CL604
CL405 (S)*	CL605
CL407 (S)*	CL607
CL2P	CL602
CL3	CL603
CL3A	CL603A
CL4	CL604
CL 5D4	
CL 5D4L	
CL 5D5	
CL 5D5L	
CL 5D7	
CL 702/2	
CL 704M	
CL 704/2	
CL 705M	
CL 707M	
CL 902N	
CL 903AN	
CL 905H	
CL 907H	

*Side view cells replaced by either 700 or 900 series.

CLAIREX ELECTRONICS
A DIVISION OF CLAIREX® CORPORATION
560 South Third Avenue, Mount Vernon, N.Y. 10550 · (914) 664-6602

TYPE 5 CdS, peak spectral response 5500 angstroms (closely matches the human eye), most stable, lowest memory photocell available. Can be used in light measuring applications and precision low speed switching. For use with incandescent, fluorescent or neon lamps.

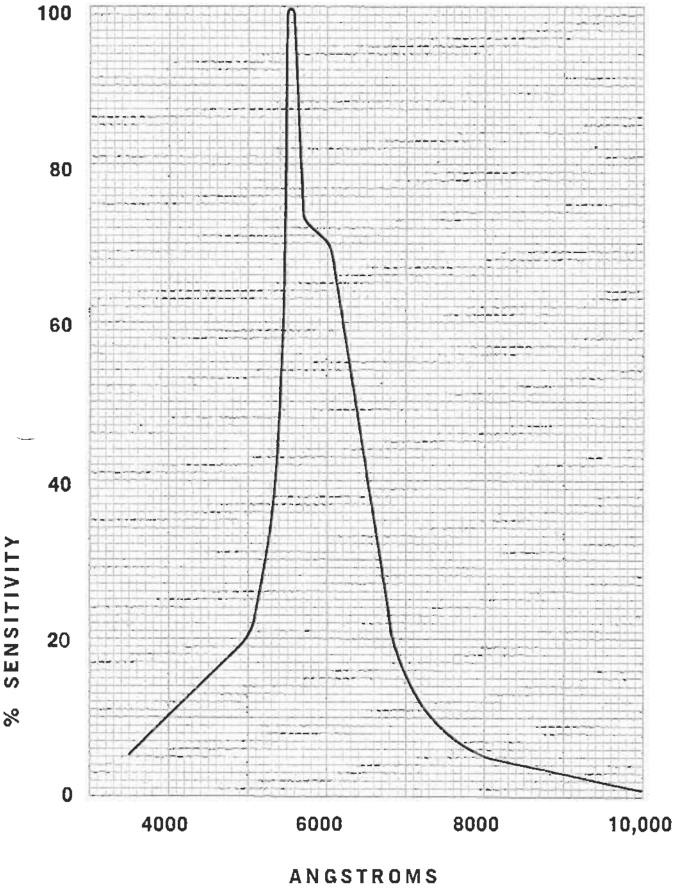

Variation of Conductance
With Temperature and Light

Foot Candles	.01	0.1	1.0	10	100
Temperature	% Conductance				
−25°C	117	108	98	95	96
0°C	105	102	96	95	97
25°C	100	100	100	100	100
50°C	96	95	101	106	104
75°C	82	81	98	111	110

Response Time Versus Light

Foot Candles	.01	0.1	1.0	10	100
Rise (Seconds)*	5.80	.82	.140	.035	.010
Decay (Seconds)**	2.96	.56	.110	.043	.014

*Time to (1 - 1/e) of final reading after 5 seconds Dark adaption.

**Time to 1/e of initial reading.

TYPE 5H CdS, peak spectral response 5500 angstroms (closely matches the human eye). Combines high speed, stability, linearity, and uniform color temperature response. Can be used for high speed switching or high stability measuring applications. For use with incandescent, fluorescent or neon lamps.

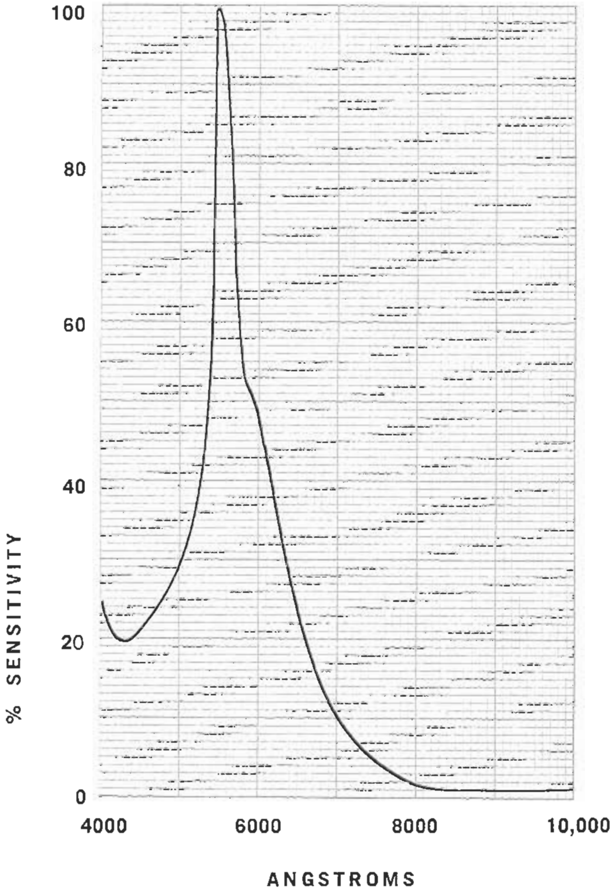

Variation of Conductance
With Temperature and Light

Foot Candles	.01	0.1	1.0	10	100
Temperature	% Conductance				
−25°C	80	85	85	88	99
0°C	93	91	91	89	98
25°C	100	100	100	100	100
50°C	93	96	105	112	109
75°C	51	81	102	120	125

Response Time Versus Light

Foot Candles	.01	0.1	1.0	10	100
Rise (Seconds)*	1.460	.116	.030	.005	.002
Decay (Seconds)**	.159	.019	.004	.002	.001

*Time to (1 - 1/e) of final reading after 5 seconds Dark adaption.

**Time to 1/e of initial reading.

TYPE 7 CdS, peak spectral response 6150 angstroms, moderate speed and ratio. Can be used in general beam breaking applications. For use with incandescent, neon or fluorescent lamps.

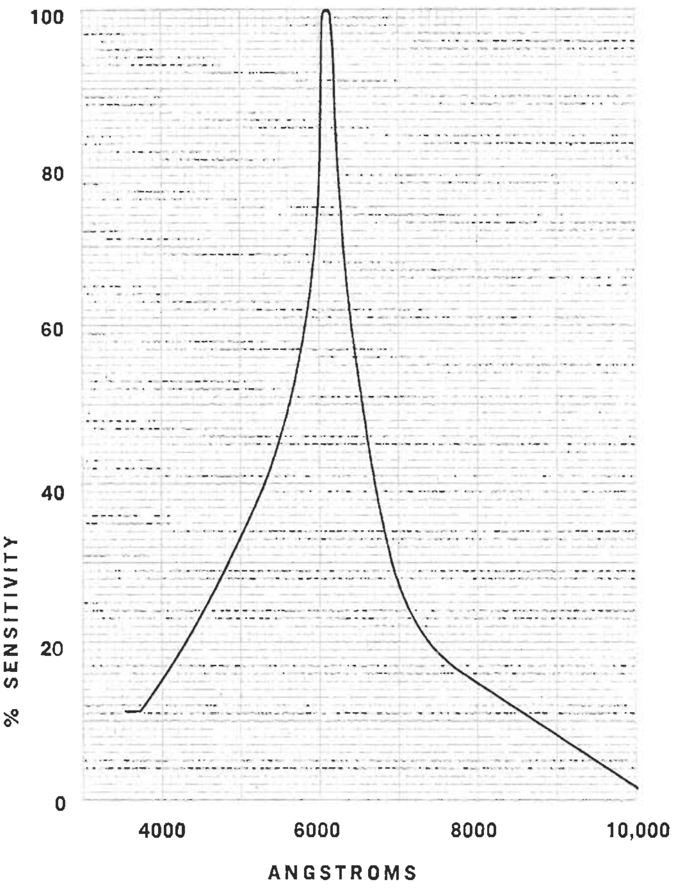

Variation of Conductance
With Temperature and Light

Foot Candles	.01	0.1	1.0	10	100
Temperature		% Conductance			
−25°C	114	106	98	92	91
0°C	112	110	101	97	96
25°C	100	100	100	100	100
50°C	74	84	92	96	100
75°C	37	59	72	85	90

Response Time Versus Light

Foot Candles	.01	0.1	1.0	10	100
Rise (Seconds)*	.790	.320	.088	.022	.005
Decay (Seconds)**	.520	.093	.041	.016	.007

*Time to (1 - 1/e) of final reading after 5 seconds Dark adaption.

**Time to 1/e of initial reading.

TYPE 7H CdS Peak spectral response 6200 angstroms, fast decay time combined with low resistance and high slope. Ideal for fast switching between close light levels or where temperature stability is critical.

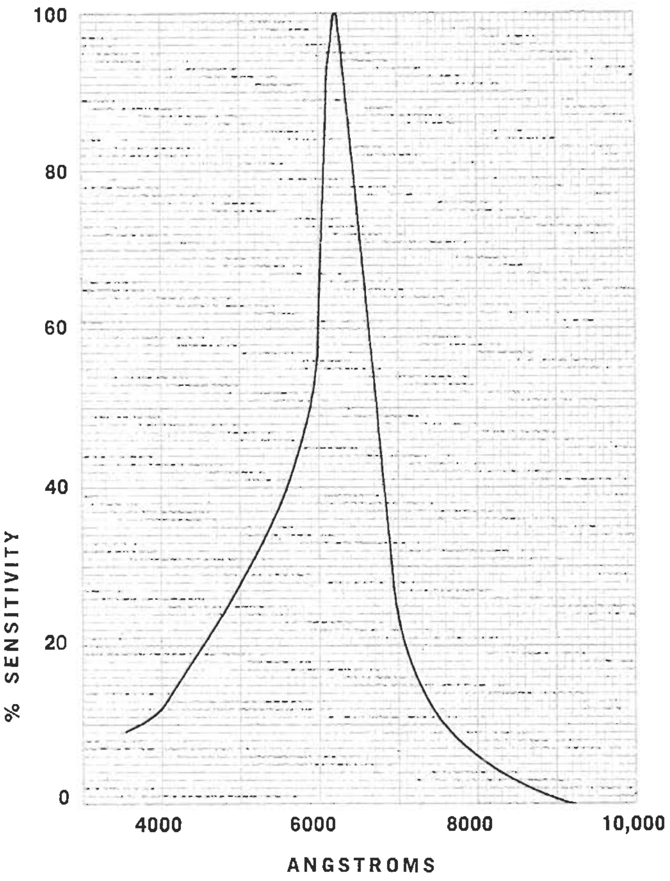

Variation of Conductance
With Temperature and Light

Foot Candles	.01	0.1	1.0	10	100
Temperature		% Conductance			
−25°C	175	110	97	90	82
0	166	110	99	97	91
25°C	100	100	100	100	100
50°C	55	80	93	98	104
75°C	6	42	75	92	103

Response Time Versus Light

Foot Candles	.01	0.1	1.0	10	100
Rise (Seconds)*	2.51	.53	.11	.018	.004
Decay (Seconds)**	.40	.052	.006	.0015	.0006

*Time to (1 - 1/e) of final reading after 5 seconds Dark adaption.

**Time to 1/e of initial reading.

CELL RESISTANCE CURVES

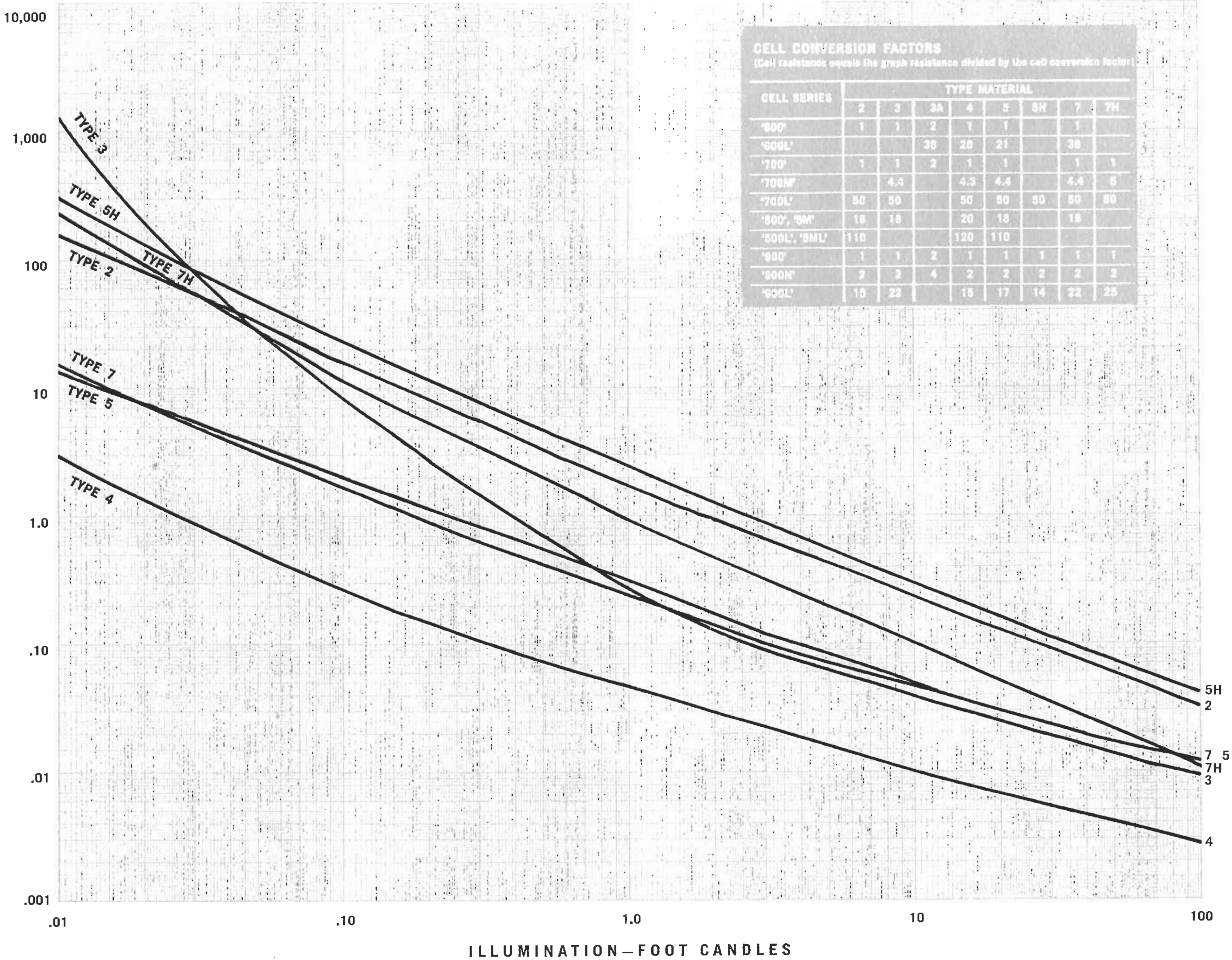

CELL CONVERSION FACTORS
(Cell resistance equals the graph resistance divided by the cell conversion factor)

CELL SERIES	TYPE MATERIAL							
	2	3	3A	4	5	5H	7	7H
'600'	1	1	2	1	1		1	
'600L'			38	20	21		38	
'700'	1	1	2	1	1		1	1
'700M'		4.4		4.3	4.4		4.4	5
'700L'	50	50		50	50	50	50	80
'500', '5M'	18	18		20	18		18	
'500L', '5ML'	110			120	110			
'900'	1	1	2	1	1	1	1	1
'900N'	2	2	4	2	2	2	2	2
'900L'	16	22		16	17	14	22	25

VARIATION OF CONDUCTANCE WITH LIGHT HISTORY

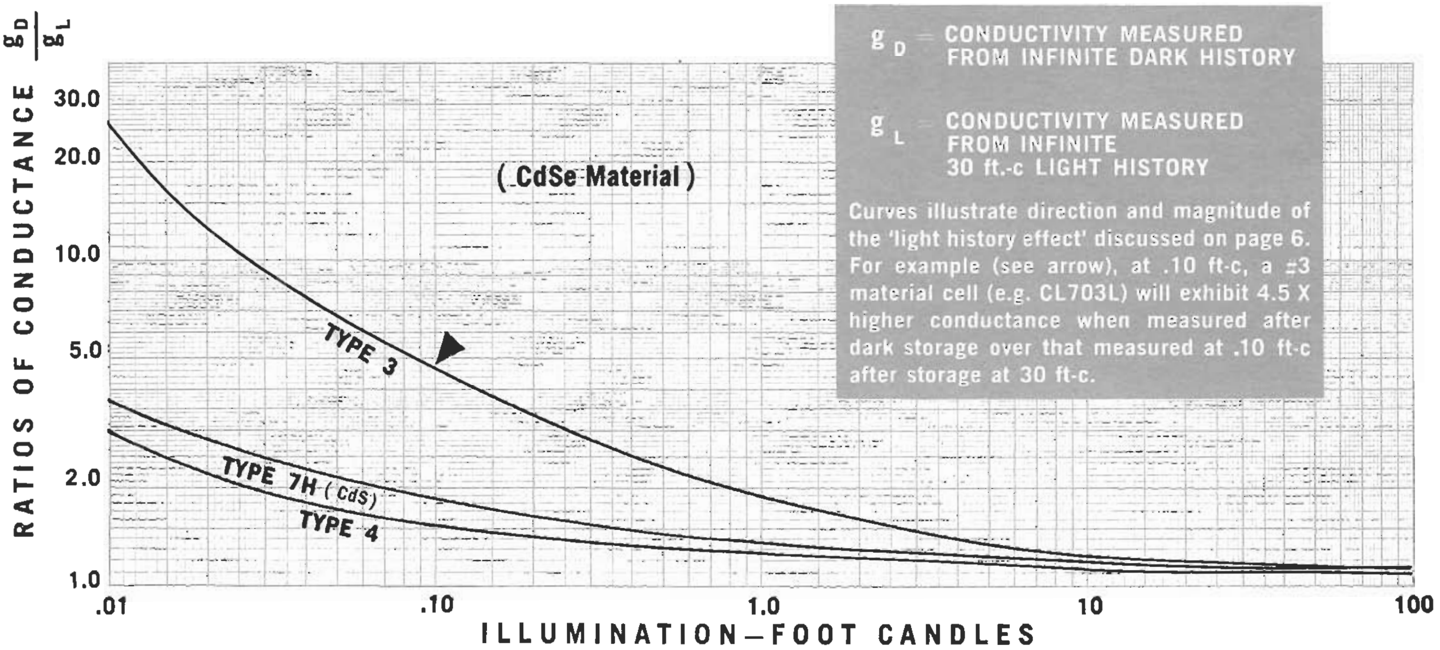

g_D = CONDUCTIVITY MEASURED FROM INFINITE DARK HISTORY

g_L = CONDUCTIVITY MEASURED FROM INFINITE 30 ft.-c LIGHT HISTORY

Curves illustrate direction and magnitude of the 'light history effect' discussed on page 6. For example (see arrow), at .10 ft-c, a #3 material cell (e.g. CL703L) will exhibit 4.5 X higher conductance when measured after dark storage over that measured at .10 ft-c after storage at 30 ft-c.

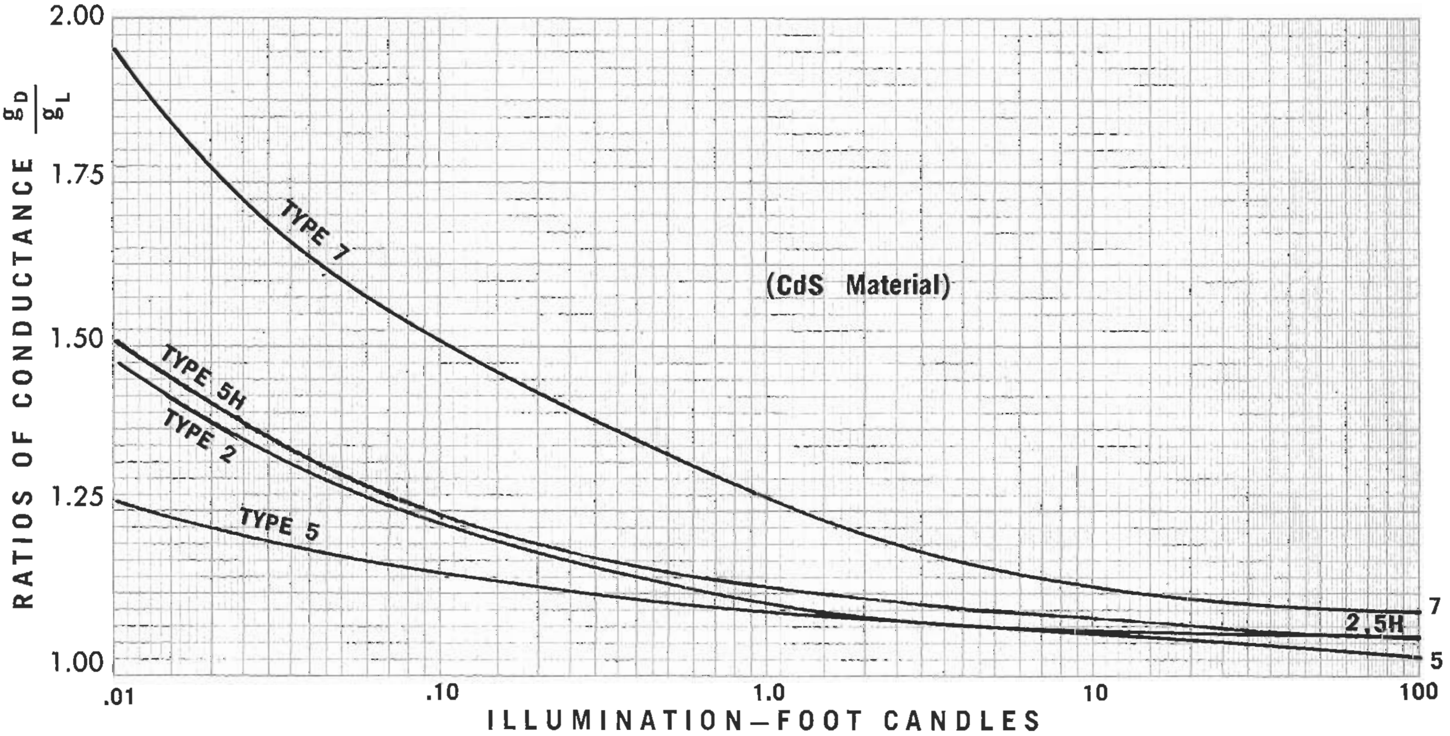

COLOR TEMPERATURE AND POWER DERATING CURVES

COLOR TEMPERATURE RESPONSE

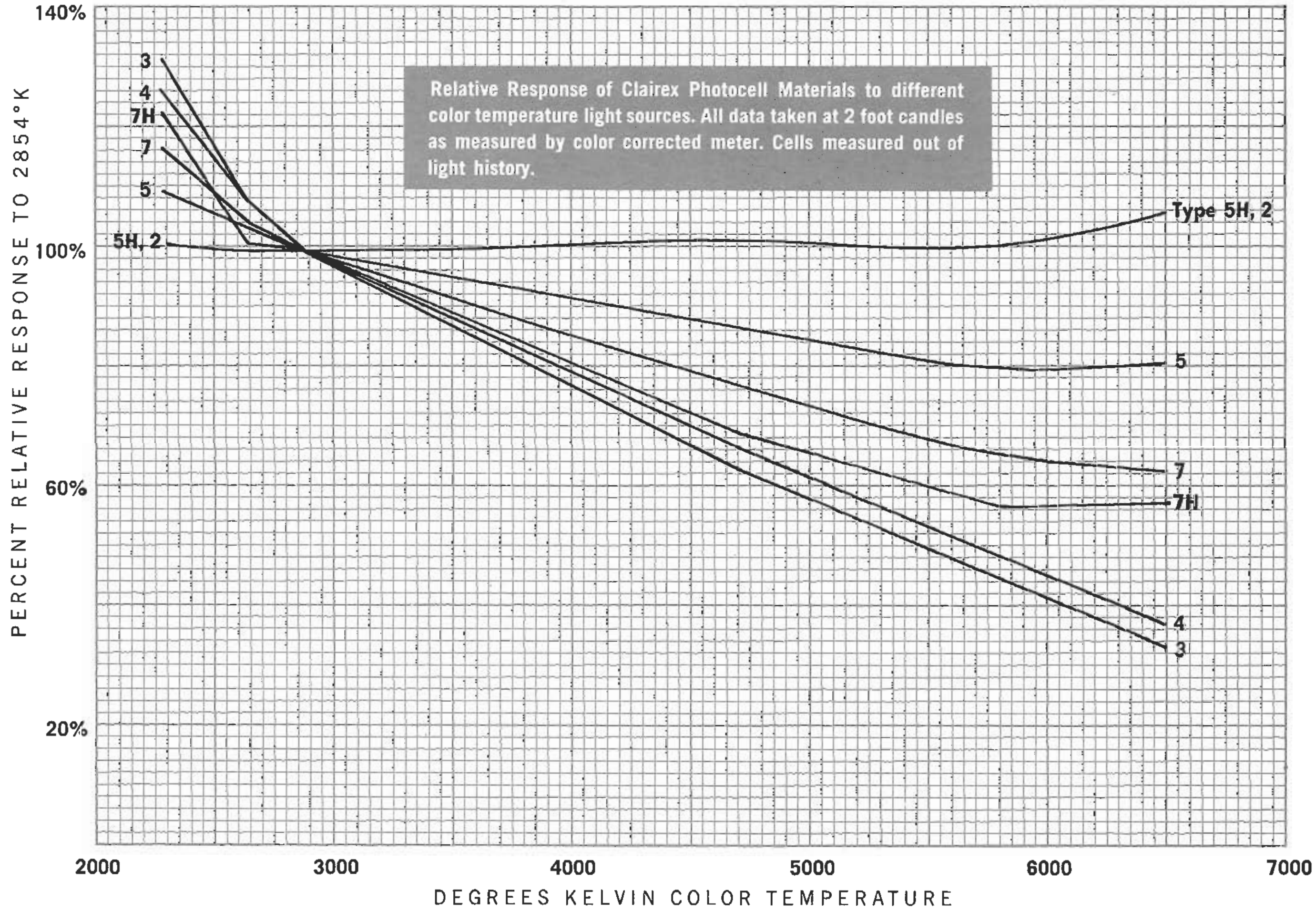
Relative Response of Clairex Photocell Materials to different color temperature light sources. All data taken at 2 foot candles as measured by color corrected meter. Cells measured out of light history.

POWER DERATING CURVES

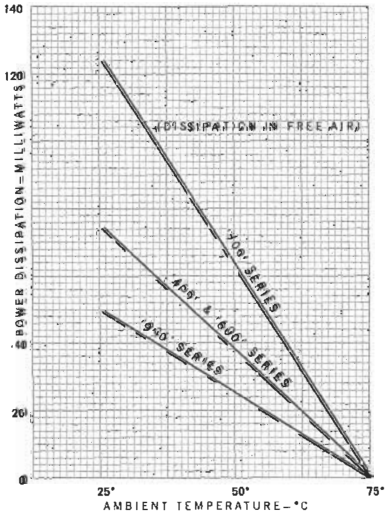

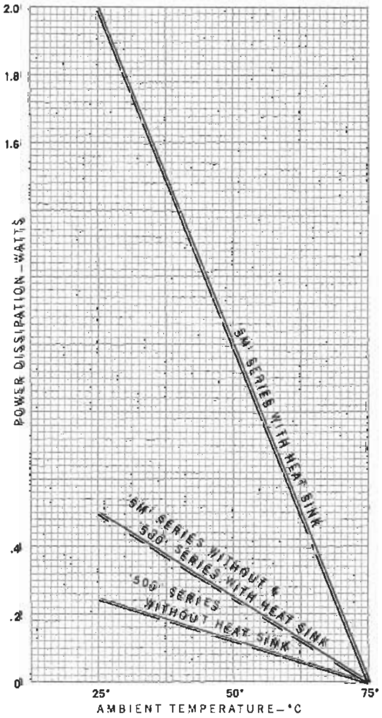

LIGHT MEASUREMENT
A DISCUSSION

Photometry is a difficult field of precise measurement. The original standard for candle power was a candle of special construction which was observed by the human eye as it burned and then compared to the unknown source. Thus the spectral quality of the light and the sensitivity of the sensor were extremely difficult to reproduce accurately. Today a special lamp has replaced this candle as the primary reference and the human eye has been replaced by thermopiles with filters to simulate eye sensitivity. However, even with these improvements, light measurements remain difficult to reproduce due to stray light effects, color temperature shifts, nonuniform light distribution, drift of sensors, and other circumstances.

In all photometric operations it is necessary for the lamps to be at a known color temperature. Since tungsten lamps have a continuous spectral output their spectral characteristics must be defined in terms of color temperature. For normal work, standard lamps are run at a color temperature of 2854°K.

The secondary standards used today are tungsten lamps which have been carefully measured for their candlepower output at a controlled voltage and current. These standards are available from the National Bureau of Standards as well as several private testing laboratories. Their output is expressed in HCP or Horizontal Candle Power. Output is normally measured in a plane perpendicular to the lamp's vertical axis at a height in line with the filament. Usually the lamp is also marked as to the front and rear sides. With this calibration it is possible to reproduce a variety of illumination levels, by just varying the distance between the photocell and lamp. The foot candles falling on the photocell will equal the HCP of the lamp divided by the square of the distance between them.

$$\frac{\text{HCP}}{D^2} = \text{Foot Candles}$$

Whenever possible, it is most desirable to make all light measurements in terms of foot candles as the most easily reproduced unit of light. Whenever foot candle measurements are made, it is important to keep the lamp as far away from the sensor as possible to enable it to act as a point source. A good rule of thumb: maintain a distance of at least six times the longest source dimension.

There are occasions when foot candle measurements are not applicable and brightness measurements are required. For example, if light is reflected from a secondary surface, causing it to be not a point source but an area source. The common unit used to express brightness is the foot lambert. A foot lambert is the brightness of a uniformly diffusing surface reflecting 100% of the light falling on it when illuminated with one foot candle. Therefore, if one foot candle illuminated a surface which had a reflectance of 80%, the brightness of the surface would be .8 foot lambert.

A frequent method of simulating brightness sources is to place a sheet of opal glass between the photocell and lamp. This glass is available calibrated for a conversion factor of foot lamberts on one side of the glass per foot candle illuminating the opposite side.

The nomograph to the right solves the light intensity equation noted previously for both feet and inches. Results are obtained on similar sets of scales, that is, either use all A scales for a calculation, or use the B or C scales as required by the quantities being calculated. For instance, a 20 candlepower lamp is 5 ft. from a photocell. What is the light intensity at the photocell? A line drawn from 20 on the Candlepower scale through the Distance scale, opposite 5 on scale B, intersects the Distance scale opposite 0.80 on the B scale.

PHOTOMETRY, NOMOGRAPH

Unfortunately, most lamps are classified according to wattage rather than candlepower. The following approximate relationships are useful:

1. Depending upon the application for which they are designed, lamps are rated for lifetimes of seconds to near infinite life. The shorter the rated life, the higher the efficiency (cp/w) and the higher the color temperature of the light.
2. If we restrict ourselves to standard voltage (120v) inside-frosted incandescent lamps rated for 1000 hours, we find that:

Efficiency increases with increasing wattage.

A 25w lamp is near 19 cp, a 60w lamp near 60 cp and a 150w lamp is near 200 cp.

Color temperature increases with increasing wattage.

Color temperature of a 150w lamp is near 2900 Kelvin.

Light output varies at approximately the 3½ power of the supply voltage (near rated voltage).

Lamp life is approximately proportional inversely to the 13th power of the supply voltage (near rated voltage).

When lamps are operated at constant voltage, light output falls with time, rapidly during the first 50 hours, more slowly thereafter (this is the reason for aging photometer lamps).

When lamps are operated at constant current, light output rises with time, slowly at first, then accelerating to catastrophic destruction.

A sample line drawn to the right for a 6 candle power lamp shows that at 2.94″ or .245′ from the lamp filament we have an intensity of 100 foot candles. Similarly, at 29.4″ the intensity is 1 foot candle and at 294″, .01 foot candle.

(Read correspondingly headed columns, i.e., A, A′, A″, etc.)

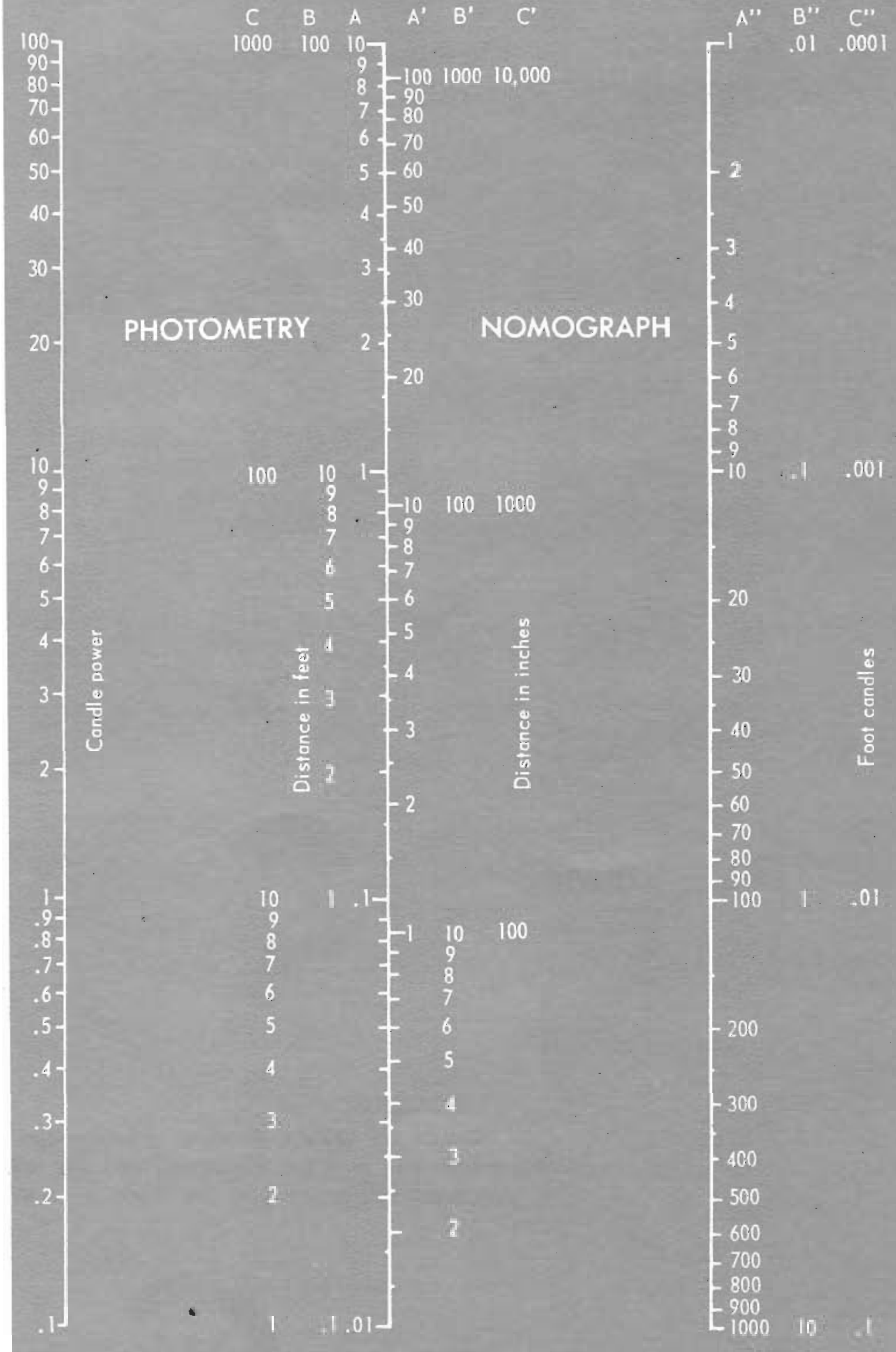

Several useful definitions:

A Foot Candle is the illumination produced when the light from one candle falls normally on a surface at a distance of one foot.

A Lux (commonly used in Europe) is the illumination produced when the light from one candle falls normally on a surface at a distance of one meter.

A point source emiting light uniformly in all directions radiates 4π lumens/candle.

A lambert is the brightness of a perfectly diffusing surface emittting or reflecting one lumen per square centimeter.

A Foot Lambert equals $1/\pi$ candles/sq. ft.

SCHMITT TRIGGER

The Schmitt Trigger is a valuable control circuit that provides snap action control in which trip point and differential (hysteresis) are both adjustable independently of the relay characteristics.

Because of the trigger type switching, output transistor power dissipation is quite low even when considerable relay current is drawn.

- $1^{\prime}$: Relay pulls in when cell is darkened
- $1^{\prime\prime}$: Relay pulls in when cell is illuminated
- $1^{\prime\prime\prime}$: Both (or all) cells must be illuminated for relay to drop out ('AND' circuit)
- $1^{\prime\prime\prime\prime}$: Either (or any **one**) cell when illuminated will cause relay to drop out ('OR' circuit)

R_2 sets operating point

R_3 sets differential

The controls interact and adjustments should be alternated till both operating point and differential are within required limits.

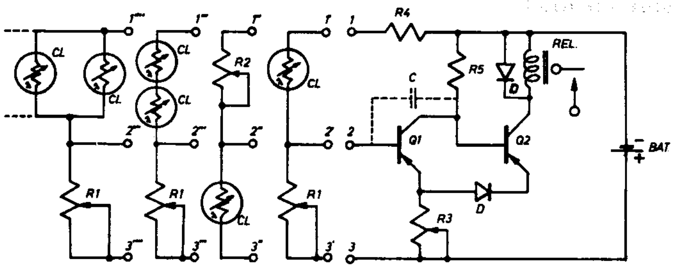

R1: 1KΩ
R2: 50KΩ
R3: 25Ω
R4: 470Ω.
R5: 6.8KΩ
CL: 703L
C: .005uF
D: 1N91
Q1; Q2: 2N1303
REL.: 500Ω 9V DC
BAT.: 12V

PHOTO-ELECTRIC SERVO

A simple but accurate relay-servo for aperture or illumination control.

Circuit drives cell resistance (illumination) to a value preset by R_2. R_{10} controls dead-band.

When level is correct, all four transistors are cut off. Power drain is limited to two relatively high resistance dividers permitting economical operation with dry cells.

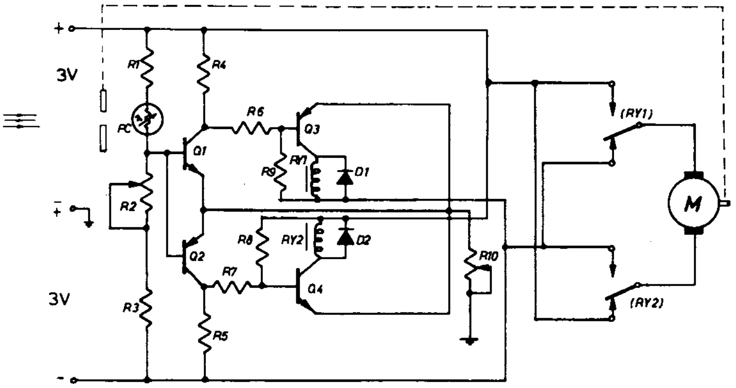

R1: 1KΩ
R2: 10KΩ
R3: 470Ω
R4: 680Ω
R5: 680Ω
R6: 270Ω
R7: 270Ω
R8: 1.2KΩ
R9: 1.2KΩ
R10: 10Ω
D1, D2: IN 536
RY1, RY2: 100Ω DC. 2V
Q1, Q4: 2N 1304
Q2, Q3: 2N 1305
PC: CLAIREX PHOTOCELL TYPE CL705HL

LOW LEVEL VOLTMETER INPUT CHOPPER

Low level DC is converted to AC, amplified, synchronously rectified, and compared to the input for high accuracy independent of loop components other than the feedback resistor R_2 and R_3 and the reading meter.

For non-inverting amplifier, Ne_1 illuminates PC_1 and PC_3; Ne_2 illuminates PC_2 and PC_4.

For inverting amplifier, Ne_1 illuminates PC_1 and PC_4; Ne_2 illuminates PC_2 and PC_3.

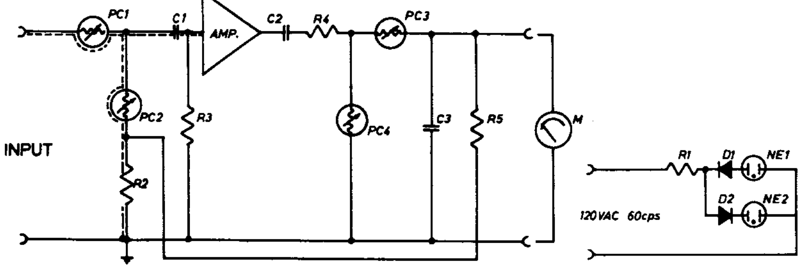

SENSITIVE PHOTOMETER CIRCUIT

This amplified bridge-type circuit is adaptable to measurements over an extremely wide range of cell resistance (light levels), to narrow range comparison measurements (color balance) and to intensity ratio measurements (contrast).

With the component values suggested, and using a CL705HL, light levels of less than .01 ft c may be measured or compared.

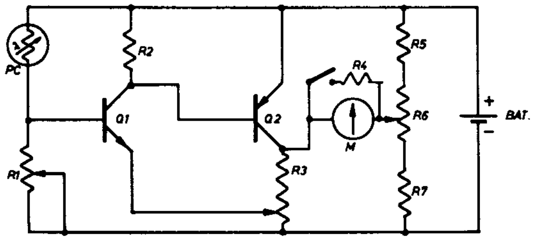

R1: .1MEG.
R2: .1MEG
R3: 5KΩ
R4: 470Ω
R5: 1.KΩ
R6: 10KΩ
R7: 1.KΩ

M: METER 100-0-100uA F.S.
Q1: 2N1304
Q2: 2N1305
BAT.: 6V
PC: CLAIREX PHOTOCELL TYPE CL705HL

REMOTE CONTROL UNIT FOR LEVEL ADJUSTMENT AND STEREO-BALANCE

This circuit requires no shielded wiring since the control leads are isolated from the audio circuits.

Control is smooth and noiseless. Control range is easily adequate for optimum personal adjustment almost anywhere in a room or hall.

Insertion loss needn't exceed that required for balance.

Unit may be installed between preamplifier and power amplifier.

Battery drain will not exceed 65 mA. A 6V 'hot shot' battery run 6 hours a day will serve for a month or more.

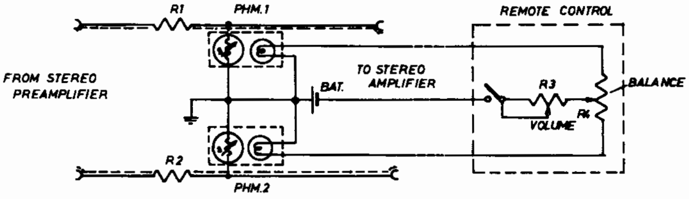

R1; R2: 47K
R3: 500Ω 4W
R4: 500Ω 4W

PHM1.PHM2: CLAIREX PHOTOMOD TYPE CLM 5012
BAT: 12V
CLM 5012 = (CL705L + 12V/40mA Lamp)

D.C. CONVERTER: LIGHT INTENSITY TO P.R.F.

The output pulse frequency is proportional to cell conductance which follows the light intensity.

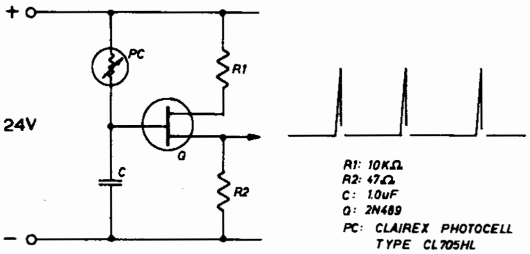

R1: 10KΩ
R2: 47Ω
C: 1.0uF
Q: 2N489
PC: CLAIREX PHOTOCELL
TYPE CL705HL

MULTIPLE REMOTE CONSOLE

Switching, mixing, and level control are all performed via isolated 'cold' low voltage DC lines.

Switching and level adjustments are clickless and noiseless.

A lamp at each mike indicates when the mike is 'live'.

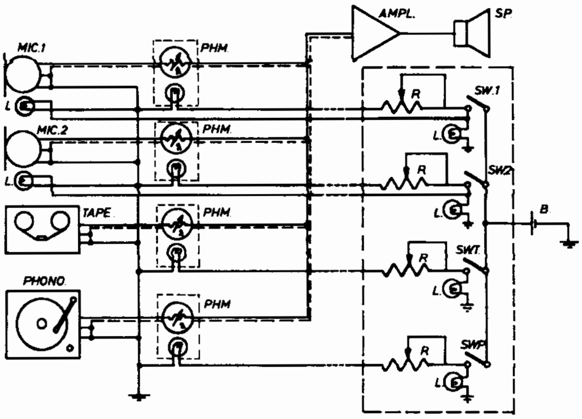

R: 2500
L: 12V
PHM: CLM 5012

B: 12V
PHM
CLM 5012 = (CL705L + 12V/40mA LAMP)

[illegible] LAMP CIRCUIT

For unattended lamps. Lamp goes on at dusk, off at dawn; day drain is less than one percent of night drain.

Low power transistors can be used even for ¼A lamps since circuit triggers output transistor from OFF to saturation.

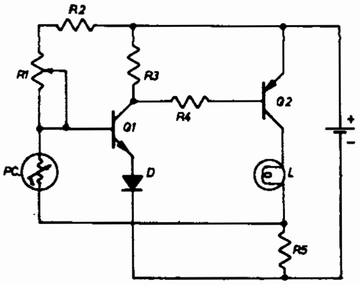

R1: 10KΩ
R2: 1KΩ
R3: 2.7KΩ
R4: 330Ω
R5: 2.7Ω
PC: CLAIREX PHOTOCELL
TYPE CL 5M5L

D: Si diode rated > 20mA
L: #44
BAT.: 6V
Q1: 2N2923
Q2: 2N 525

DATA SHEET 103 / ITD 8-71

CL-500 SERIES

HERMETICALLY SEALED ½″ DIAMETER GLASS CASE

- 8 Types
- Maximum Power — Air: ¼ Watt
- Maximum Power — Heat Sink: ½ Watt
- Resistance Tolerance at 2 ft-c: ± 33⅓%
- 5 Photoconductive Materials
- Temperature Range: −50°C to +75°C

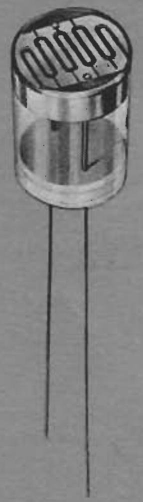

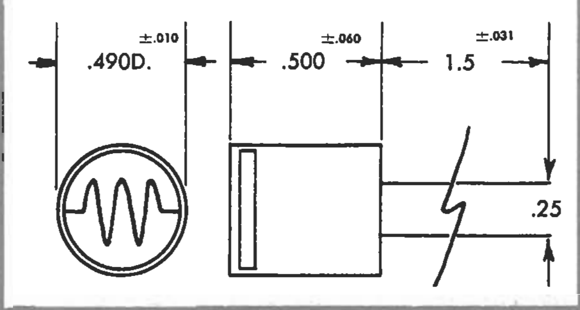

TYPE	Sensitive Material	Peak Spectral Response (Angstroms)	Resistance @ 2 ft-c (Ohms)	Min. Dark Resistance 5 sec. After 2 ft-c	Maximum Voltage Rating (Peak A.C.)	Measurement Voltage
CL502	Type 2 CdS	5150	55K	3.6 Meg	250V	10V
CL502L			9K	600K	170V	12V
CL503	Type 3 CdSe	7350	7.2K	48 Meg	250V	12V
CL504	Type 4 CdSe	6900	1.5K	400K	250V	10V
CL504L			.25K	67K	170V	1.35V
CL505	Type 5 CdS	5500	9K	600K	250V	12V
CL505L			1.5K	100K	170V	10V
CL507	Type 7 CdS	6150	7.2K	1.4 Meg	250V	12V

MEASUREMENT DATA • All measurements at 2854°K • Cells light adapted 16 hrs. at 30 ft—c prior to test • Measurement voltage is D.C. applied voltage for measuring resistance • All readings made at 25°C ambient.

CLAIREX ELECTRONICS
A DIVISION OF CLAIREX® CORPORATION
560 South Third Avenue, Mount Vernon, N.Y. 10550 · (914) 664-6602

CL-5M SERIES

HERMETICALLY SEALED TO-8 CASE

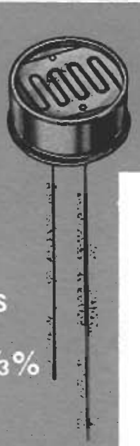

- 8 Types
- Maximum Power — Air: ½ Watt
- Maximum Power — Heat Sink: 2 Watts
- Resistance Tolerance at 2 ft-c: ± 33⅓%
- 5 Photoconductive Materials
- Temperature Range: −50°C to +75°C

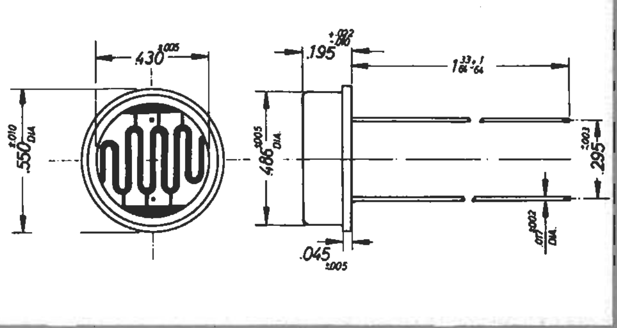

TYPE	Sensitive Material	Peak Spectral Response (Angstroms)	Resistance @ 2 ft-c (Ohms)	Min. Dark Resistance 5 sec. After 2 ft-c	Maximum Voltage Rating (Peak A.C.)	Measurement Voltage
CL5M2	Type 2 CdS	5150	55K	3.6 Meg	250V	10V
CL5M2L			9K	600K	170V	12V
CL5M3	Type 3 CdSe	7350	7.2K	48 Meg	250V	12V
CL5M4	Type 4 CdSe	6900	1.5K	400K	250V	10V
CL5M4L			.25K	67K	170V	1.35 V
CL5M5	Type 5 CdS	5500	9K	600K	250V	12V
CL5M5L			1.5K	100K	170V	10V
CL5M7	Type 7 CdS	6150	7.2K	1.4 Meg	250V	12V

MEASUREMENT DATA • All measurements at 2854°K • Cells light adapted 16 hrs. at 30 ft–c prior to test • Measurement voltage is D.C. applied voltage for measuring resistance • All readings made at 25°C ambient.

CLAIREX ELECTRONICS
A DIVISION OF CLAIREX® CORPORATION
560 South Third Avenue, Mount Vernon, N.Y. 10550 · (914) 664-6602

DATA SHEET 105 / ITD 8-71

CL-600 SERIES

HERMETICALLY SEALED ¼″ DIAMETER GLASS CASE

- 11 Types
- Maximum Power: 75mw @ 25°C
- Resistance Tolerance at 2 ft-c: ± 33⅓%
- 5 Photoconductive Materials
- Temperature Range: –50°C to +75°C

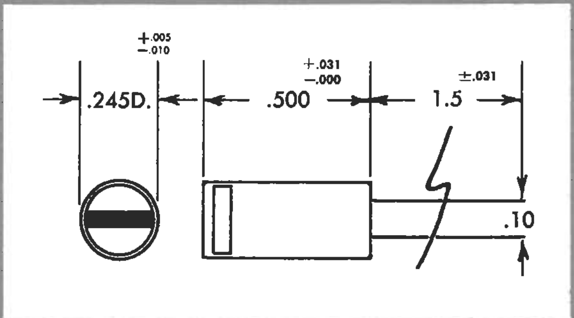

TYPE	Sensitive Material	Peak Spectral Response (Angstroms)	Resistance @ 2 ft-c (Ohms)	Min. Dark Resistance 5 sec. After 2 ft-c	Maximum Voltage Rating (Peak A.C.)	Measurement Voltage
CL602	Type 2 CdS	5150	1 Meg	66.7 Meg	300V	100V
CL603	Type 3 CdSe	7350	133K	880 Meg	300V	50V
CL603A			75K	500 Meg	300V	50V
CL603AL			3.5K	23 Meg	170V	8V
CL604	Type 4 CdSe	6900	30K	8 Meg	300V	20V
CL604M			7.5K	2 Meg	250V	10V
CL604L			1.5K	400K	170V	5V
CL605	Type 5 CdS	5500	166K	11 Meg	300V	60V
CL605L			7.5K	500 K	170V	10V
CL607	Type 7 CdS	6150	133K	27 Meg	300V	50V
CL607L			3.5K	700K	170V	8V

MEASUREMENT DATA • All measurements at 2854°K • Cells light adapted 16 hrs. at 30 ft–c prior to test • Measurement voltage is D.C. applied voltage for measuring resistance • All readings made at 25°C ambient.

CLAIREX ELECTRONICS
A DIVISION OF CLAIREX® CORPORATION
560 South Third Avenue, Mount Vernon, N.Y. 10550 · (914) 664-6602

DATA SHEET 106 / ITD 8-71

CL-700 SERIES
HERMETICALLY SEALED TO-5 CASE

- 23 Types
- Maximum Power: 125mw @ 25°C
- Resistance Tolerance at 2 ft-c: ± 33⅓%
- 7 Photoconductive Materials
- Temperature Range: –50°C to +75°C

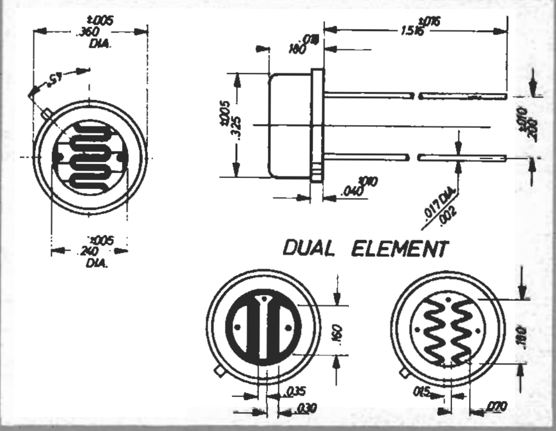

TYPE	Sensitive Material	Peak Spectral Response (Angstroms)	Resistance @ 2 ft-c (Ohms)	Min. Dark Resistance 5 sec. After 2 ft-c	Maximum Voltage Rating (Peak A.C.)	Measurement Voltage
CL702	Type 2 CdS	5150	1 Meg	66 Meg	300V	60V
CL702L			20K	1.3 Meg	100V	10V
***CL702L/2**			46K	3 Meg	100V	10V
CL703	Type 3 CdSe	7350	133K	880 Meg	300V	50V
CL703A			67K	440 Meg	300V	50V
CL703M			30K	200 Meg	250V	20V
CL703L			2.7K	18 Meg	100V	10V
***CL703/2**			50K	330 Meg	300V	50V
***CL703L/2**			6.5K	43 Meg	100V	10V
CL704	Type 4 CdSe	6900	30K	8 Meg	300V	20V
CL704L			0.6K	160K	100V	4V
***CL704L/2**			1.5K	400K	100V	10V
CL705	Type 5 CdS	5500	166K	11 Meg	300V	100V
CL705L			3.3K	220K	100V	10V
***CL705/2**			166K	11 Meg	300V	100V
***CL705L/2**			7.5K	500K	100V	15V
CL705HL	Type 5H CdS	5500	28K	18.7 Meg	100V	10V
***CL705HL/2**			67.5K	45 Meg	100V	10V
CL707	Type 7 CdS	6150	133K	27 Meg	300V	100V
CL707L			2.7K	540K	100V	10V
CL707H	Type 7H CdS	6200	600K	335 Meg	300V	40V
CL707HM			100K	67 Meg	250V	24V
CL707HL			10K	6.7 Meg	100V	8V

*Dual Element Cell

MEASUREMENT DATA • All measurements at 2854°K • Cells light adapted 16 hrs. at 30 ft–c prior to test • Measurement voltage is D.C. applied voltage for measuring resistance • All readings made at 25°C ambient.

CLAIREX ELECTRONICS
A DIVISION OF CLAIREX® CORPORATION
560 South Third Avenue, Mount Vernon, N.Y. 10550 · (914) 664-6602

DATA SHEET 107 / ITD 8-71

CL-900 SERIES

HERMETICALLY SEALED TO-18 CASE

- 19 Types
- Maximum Power: 50mw @ 25°C
- Resistance Tolerance at 2 ft-c: ±33⅓%
- 7 Photoconductive Materials
- Temperature Range: –50°C to +75°C

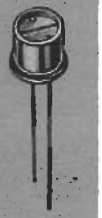

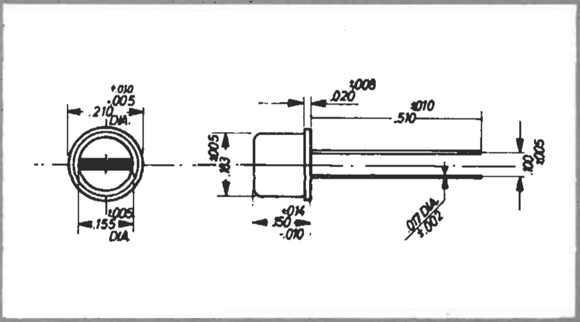

TYPE	Sensitive Material	Peak Spectral Response (Angstroms)	Resistance @ 2 ft-c (Ohms)	Min. Dark Resistance 5 sec. After 2 ft-c	Maximum Voltage Rating (Peak A.C.)	Measurement Voltage
CL902	Type 2 CdS	5150	1 Meg	66.7 Meg	250V	60V
CL902L			67K	4.5 Meg	100V	45V
CL903	Type 3 CdSe	7350	133K	880 Meg	250V	30V
CL903A			67K	450 Meg	250V	30V
CL903N			66K	440 Meg	100V	30V
CL903L			6K	40 Meg	100V	10V
CL904	Type 4 CdSe	6900	30K	8 Meg	250V	10V
CL904N			15K	4 Meg	100V	10V
CL904L			2K	520K	100V	8V
CL905	Type 5 CdS	5500	166K	11 Meg	250V	35V
CL905N			83K	5.5 Meg	100V	35V
CL905L			10K	670K	100V	10V
CL905HN	Type 5H CdS	5500	700K	467 Meg	100V	50V
CL905HL			100K	67 Meg	100V	40V
CL907	Type 7 CdS	6150	133K	27 Meg	250V	30V
CL907N			66K	13 Meg	100V	30V
CL907L			6K	1.2 Meg	100V	10V
CL907HN	Type 7H CdS	6200	300K	200 Meg	100V	20V
CL907HL			24K	16 Meg	100V	16V

MEASUREMENT DATA • All measurements at 2854°K • Cells light adapted 16 hrs. at 30 ft–c prior to test • Measurement voltage is D.C. applied voltage for measuring resistance • All readings are made at 25°C ambient.

CLAIREX ELECTRONICS
A DIVISION OF CLAIREX® CORPORATION
560 South Third Avenue, Mount Vernon, N.Y. 10550 · (914) 664-6602

To order photoconductive cells or obtain technical information, contact the Clairex Corporation directly or your nearest Clairex representative.

Orders for Clairex standard photoconductive cells listed in this publication may be telephoned into the main office if your local distributor does not stock the cells of your choice.

CLAIREX ELECTRONICS
A DIVISION OF CLAIREX® CORPORATION
560 South Third Avenue, Mount Vernon, N. Y. 10550 • (914) 664-6602

10CL1076

W. STEPHEN WOODWARD
CHAPEL HILL, N.C
eecon@email.unc.edu

ED ONLINE 20637

Isolated Receiver/Converter Uses Multichannel Opto-Isolator

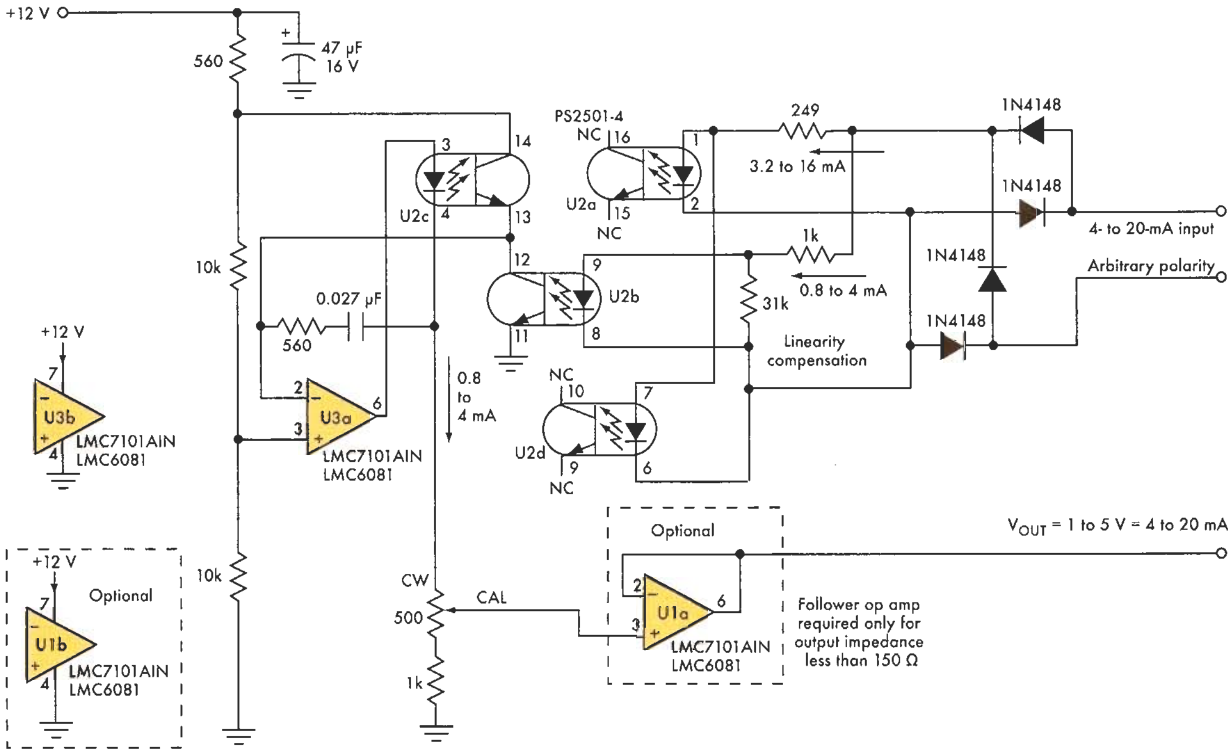

Using inexpensive generic parts, this circuit creates an optically isolated linear current loop receiver.

The accurate transmission of analog signals over long distances in noisy industrial environments is a difficult design problem. One of the oldest solutions—isolated current loops—is still one of the best. This Idea For Design presents a simple optically isolated linear current loop receiver that uses generic parts.

The receiver operates from a single non-isolated power rail (12 V) to generate a convenient analog 5-V voltage-mode output that's ready for further analog signal conditioning, digital conversion, or whatever the application requires. In combination with an earlier IFD (*"Optically Isolated 4- To 20-mA Current Loop Transmitter Is Accurate, Inexpensive,"* Electronic Design, *Sept. 25, 2008, p. 62, ED Online 19676),* it can complete a robust, analog multi-drop data link.

The circuit employs a simple technique to inexpensively implement accurate analog isolation: operation of a multiple-channel LED/transistor opto-isolator (NEC PS2501-4) in a linear mode *(see the figure)*.

The incoming 4- to 20-mA current-mode signal is subdivided in a 1:4 ratio between the active coupler pair U2b and passive pairs U2a and U2d. This division provides a more manageable 0.8- to 4-mA signal to the downstream receiver circuitry. The 1:4 current ratio is approximately established by the 1000- and 249-Ω series resistors and improved by the 31-kΩ linearity compensation resistance in parallel with LED b.

The current density in LEDs a and d is twice that of LED b, which results in the forward voltage drop of a and d being about 35 mV higher than that of b. The current shunted around LED b by the parallel resistor cancels the resulting current offset and the possible nonlinearity of about 1%.

The U3 feedback loop ensures an accurate mirror of the LED b current on the opposite side of the optical isolation barrier in LED c. The LED c current drive is served to force equality of the U2b and U2c phototransistors. The only way this can happen is for the LED c current to track that of LED b.

Any minor mismatch between the transfer gains of the U2b and U2c optical pairs is calibrated out in test with the CAL trimpot, establishing an accurate overall voltage/current conversion function of 0.25 V/mA. Stability of the calibration against component aging and temperature variation is ensured by the similar operating points of the coupled pairs.

W. STEPHEN WOODWARD, independent consultant, holds a BS (with honors) in engineering from Caltech, Pasadena, Calif., and an MS in computer science from the University of North Carolina, Chapel Hill.

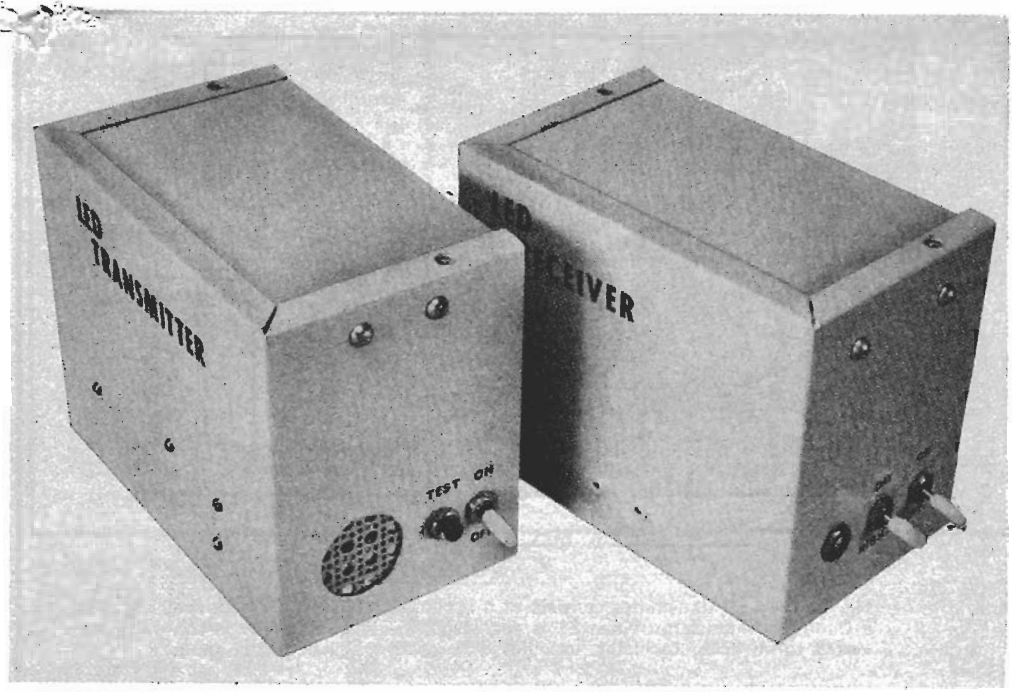

ASSEMBLE AN LED COMMUNICATOR—

THE OPTICOM

PRIVATE COMMUNICATIONS VIA AN INVISIBLE LIGHT BEAM

This optical communications system is a very practical and useful application of the light-emitting diode, the theory of operation of which is discussed elsewhere in this issue. The communicator operates at 9400 angstroms and has a range of over 1000' in darkness. Both the transmitter and receiver are simple to build and use relatively easy-to-find components.

Looking for a totally private, jam-proof, interference-free communications system? Try the "Opticom," the low-cost younger brother of the POPULAR ELECTRONICS Laser Communicator.

Using a light-emitting diode (see the article on page 35) in the transmitter and phototransistor in the receiver, the Opticom is a voice-modulated infrared optical communicator. It operates at 9400 Angstroms and has a range of over 1000 feet in darkness. The range is considerably less in daylight; but, depending on the angle of the sun and the cloud cover, it can easily reach 100 feet without the use of special filters or light shields.

The key to the amount of range obtainable is in the lenses used at the transmitter and receiver. In the prototype, simple, low-cost lenses were used. Employing a pair of binoculars or a low-cost telescope at each end would greatly increase the operating range.

Transmitter. The circuit of the transmitter is shown in Fig. 1. During voice operation, *Q1* and *Q2* provide amplification and impedance matching between the 20-mV signal from the crystal microphone and *Q3*. The am-

BY FORREST M. MIMS, III AND HENRY E. ROBERTS

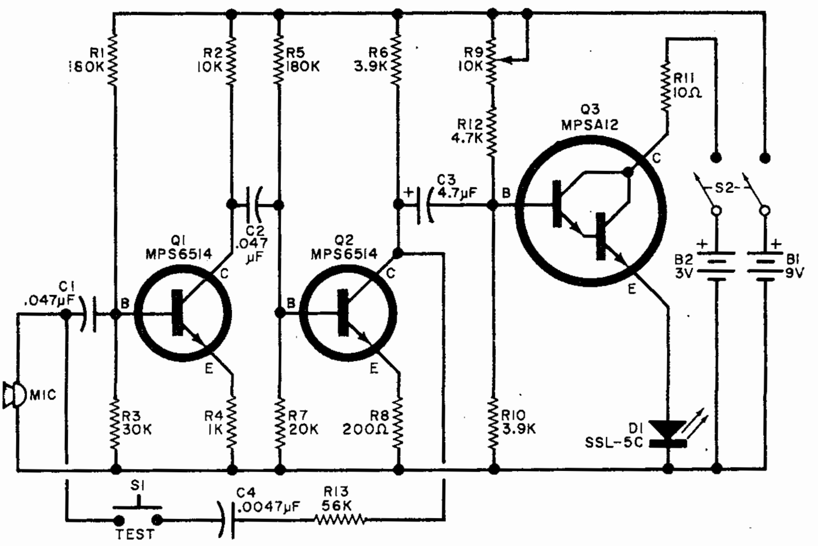

Fig. 1. The LED transmitter consists of a two-stage audio amplifier driving a Darlington modulator. When S1 is depressed, the audio amplifier is converted to an audio oscillator, used for making the original optical setup.

PARTS LIST
TRANSMITTER

B1—9-volt battery
B2—Two 1½-volt C cells
C1,C2—0.047-μF, 10-volt capacitor
C3—4.7μF, 10-volt electrolytic capacitor
C4—0.0047-μF, 10-volt capacitor
*D1—Light-emitting diode (GE SSL-5C)**
R1,R5—180,000-ohm, ¼-watt resistor
R2—10,000-ohm, ¼-watt resistor
R3—30,000-ohm, ¼-watt resistor
R4—1000-ohm, ¼-watt resistor
R6,R10—3900-ohm, ¼-watt resistor
R7—20,000-ohm, ¼-watt resistor
R8—200-ohm, ¼-watt resistor
R9—10,000-ohm, 1-watt potentiometer (Mallory MLC 14L or similar)
R11—10-ohm, ½-watt resistor
R12—4700-ohm, ¼-watt resistor
R13—56,000-ohm, ¼-watt resistor
S1—Normally open pushbutton switch
S2—Dpst slide or toggle switch
Q1,Q2—MPS6514 or HEP728 transistor
Q3—Darlington transistor (Motorola MPSA12)
Misc.—Suitable chassis, miniature crystal microphone, lens, battery holders, battery clips, mounting hardware, cement, wire, solder, etc.
**Available from Miniature Lamp Department, General Electric Co., P.O. Box 2422, Cleveland, OH 44112, $7.05, plus postage.*
Note—The following are available from MITS, 4809 Palo Duro N.E., Albuquerque, NM 87110: etched and drilled PC board, $2.50: PC board and all electronic items except switches, microphone, and batteries, $12.00: complete kit of all parts including lens, chassis, switches, and microphone, $17.00; all postpaid.

plifier formed by *Q1* and *Q2* is coupled to provide a low-frequency cutoff to minimize 60-Hz response. Darlington emitter follower *Q3* supplies bias current to the LED from *B2*. Potentiometer *R9* provides an unmodulated current-level adjustment for the LED and should be set so that ½ volt is read across *R11*. From Ohms law, ½ volt across 10 ohms indicates a current level of 50 milliamperes. This is well below the 100-mA capability of the SSL-5C LED without a heat sink.

Tone operation is provided by connecting the feedback circuit comprised of *R13* and *C4* to the input of *Q1* through *S1*. With *S1* depressed, the amplifier formed by *Q1* and *Q2* oscillates at about 500 Hz and supplies 100% modulation to the LED.

The transmitter circuit is assembled on a printed circuit board as shown in Fig. 2. In installing the semiconductors, use care—particularly with the LED, whose leads should have a heat sink attached while soldering. Make sure that the window of the LED is parallel to the PC board.

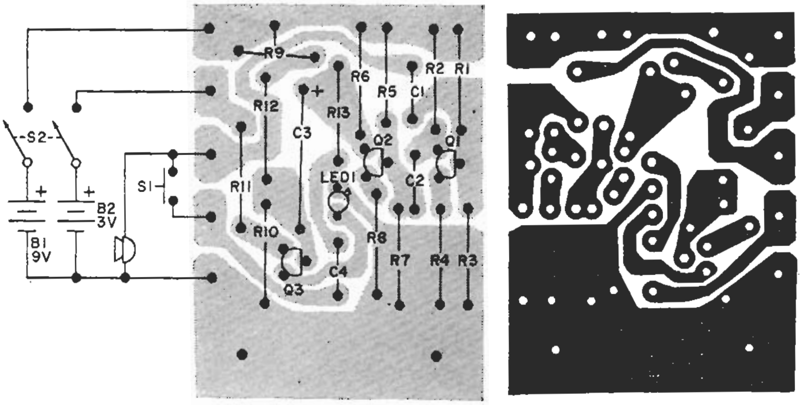

Fig. 2. The PC board foil pattern is shown actual size. When installing the components, use a heat sink on the LED (D1) and make sure that the window is facing the component side of the board. Make the board larger than the foil pattern to allow mounting holes.

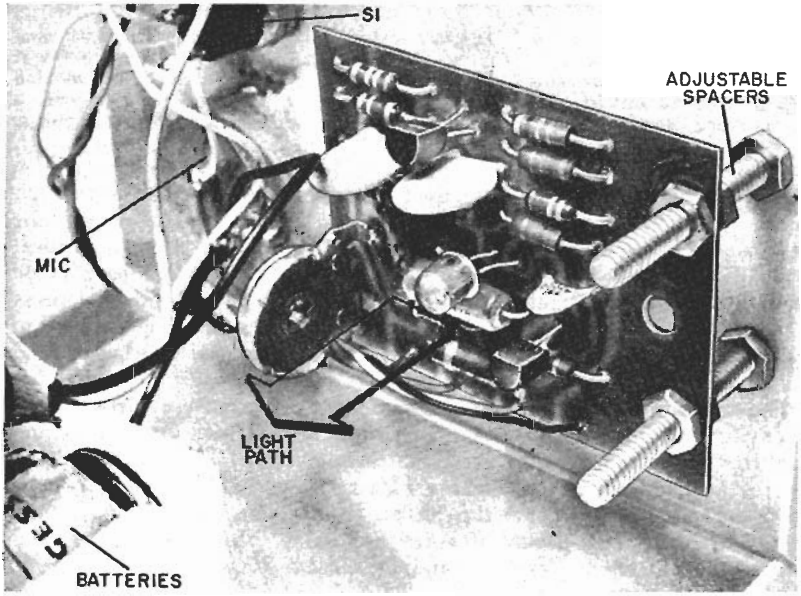

Assemble the transmitter on four adjustable spacers so that the window of the LED can be placed at the focal point of the lens. When assembling complete chassis be sure to mount the batteries so that they do not obstruct light path between the LED and the lens. Although the prototype has the microphone on chassis, a remote mike can be used. Even S2 can be mike-mounted push-to-talk switch. Oscillator switch S1 is rarely used, so can remain mounted on chassis.

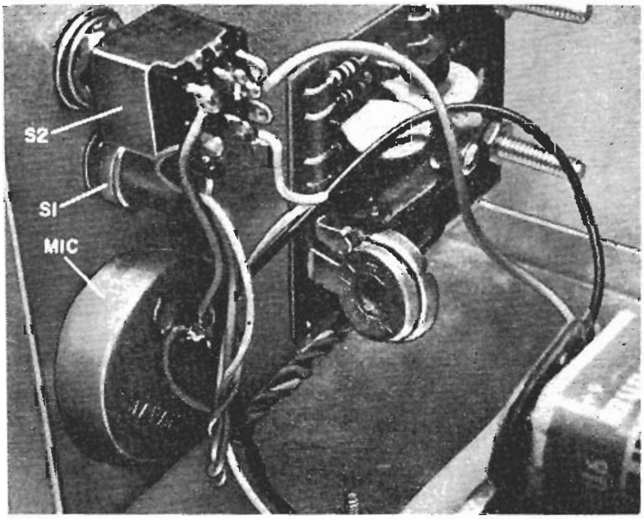

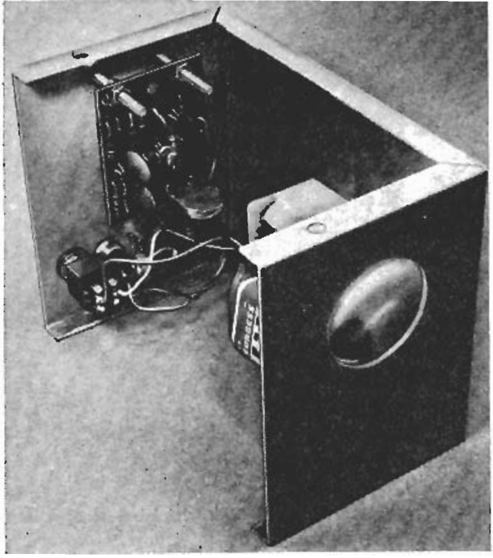

In assembling the transmitter, arrange the board and lens mounting so that the LED window is on the center line of the lens. The text explains how to adjust the board to make the lens focus at the window of the light-emitting diode on board.

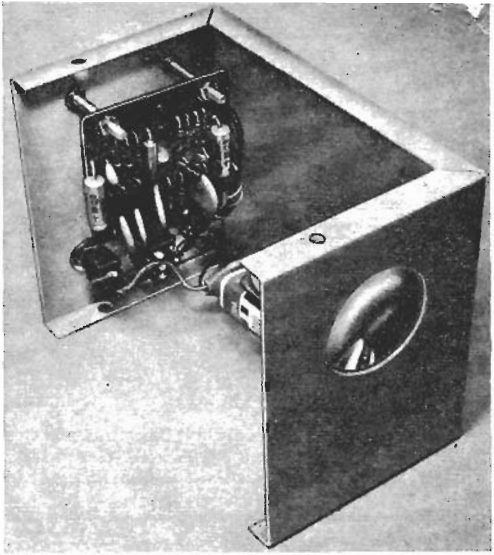

The receiver must be assembled in a manner similar to the transmitter—with the window of Q1 at the focal point of the lens. In both receiver and transmitter, once the focus has been attained, a drop of cement on screws will prevent slippage.

Receiver. A schematic of the receiver circuit is shown in Fig. 3. Phototransistor *Q1* passes a current proportional to the light intensity at its active surface. In essence, light replaces *Q1*'s base lead. Since *Q1* is quite light sensitive, even a moderate level of ambient illumination will drive it into saturation. Transistors *Q2* and *Q3* provide a dynamic load for *Q1*, preventing saturation or cutoff and extending useful daylight receiving range. The FET, *Q4*, matches the high impedance of the detection circuit to the audio amplifier formed by *Q5* and *Q6*. The complete receiver circuit provides a voltage gain of about 400.

A foil pattern and component layout for the receiver printed circuit board are shown in Fig. 4. Be very careful when installing phototransistor *Q1* because it has a plastic package and the leads are fragile. The collector of this transistor is indicated by a small arrow on the bottom. Place the transistor through the 0.175″ hole at the center of the receiver board (domed window to the component side), be sure the leads are properly oriented, and then solder them to the correct points. Use a clip-on heat sink when installing all semiconductors.

Assembly. Once both boards have been completed and checked for possible wiring errors, the system is ready for packaging. You can use the arrangement described here or you can strike out on your own. If, for example, you need only a 15-to-20-ft. range, an optical system is not required. All you have to do is aim the two boards at each other, depress the transmitter Test pushbutton, and align the two units. Then release the button and talk.

If you want a night range of up to 1000′, you must use a lens at both transmitter and receiver. Obtain two low-cost magnifying lenses at least one inch in diameter and remove the lenses from their housing or frames. Measure the focal length of each lens by placing it in the beam of a fairly distant light source. The sun is ideal, but an overhead lamp, about 10 feet away will do. The focal length is determined by placing the lens at a distance from a piece of white paper so that the smallest recognizable image is displayed on the paper. Measure the distance between the lens center and the paper—this is the focal length. The chassis to be used should be long enough so that, with the lens mounted at one end and the PC board carrying the LED or phototransistor at the other, the distance between the two can be adjusted to the focal length of the lens.

The chassis used must have a cover so that the interior is dark when the system is in use.

Drill four holes for mounting the PC board

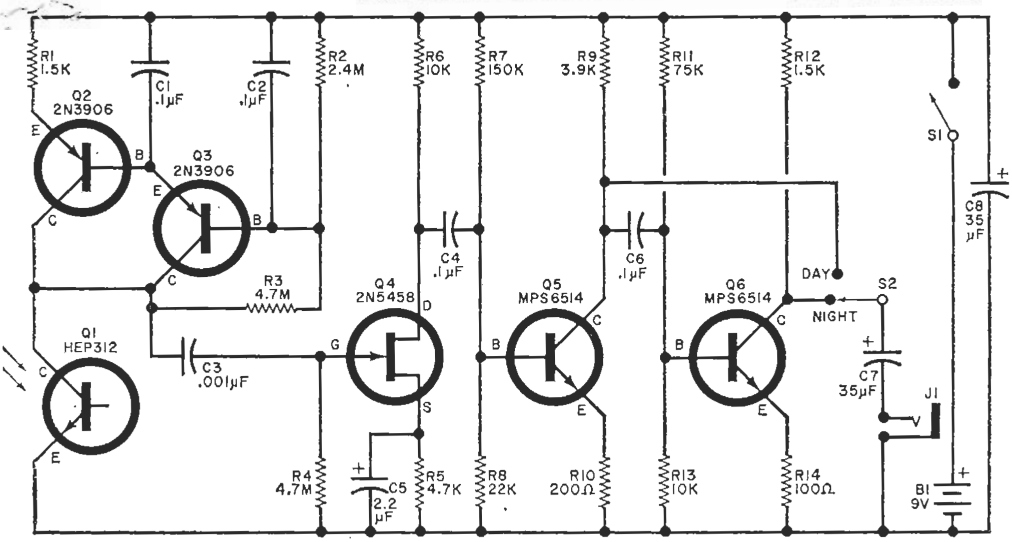

Fig. 3. Consisting of an audio amplifier driven by a phototransistor circuit, the receiver can use either two or three audio stages for day or night operation. There is no actual base connection to Q1 as this function is performed by light from LED.

PARTS LIST
RECEIVER

B1—9-volt battery

C1,C2,C4,C6—0.1-µF, 10-volt capacitor

C3—0.001-µF, 10-volt capacitor

C5—2.2-µF, 10-volt electrolytic capacitor

C7,C8—35-µF, 10-volt electrolytic capacitor

J1—Earphone jack and plug

Q1—HEP312 phototransistor

Q2,Q3—2N3906 or HEP715 transistor

Q4—2N5458 or HEP801 FET

Q5,Q6—MPS6514 or HEP728 transistor

R1,R12—1500-ohm, ¼-watt resistor

R2—2.4-megohm, ¼-watt resistor

R3,R4—4.7-megohm, ¼-watt resistor

R5—4700-ohm, ¼-watt resistor

R6,R13—10,000-ohm, ¼-watt resistor

R7—150,000-ohm, ¼-watt resistor

R8—22,000-ohm, ¼-watt resistor

R9—3900-ohm, ¼-watt resistor

R10—200-ohm, ¼-watt resistor

R11—75,000-ohm, ¼-watt resistor

R14—100-ohm, ¼-watt resistor

S1—Spst slide or toggle switch

S2—Spdt slide or toggle switch

Misc.—Suitable chassis, lens, battery connectors, battery clips, mounting, hardware, cement, earphone (250 ohms or more), solder, wire, etc.

Note—The following are available from MITS, 4809 Palo Duro N.E., Albuquerque, NM 87110: etched and drilled PC board, \$2.75; PC board and all electronic items except switches, earphone and batteries, \$11.00; complete kit of all parts including lens, chassis, switches, and earphone, \$15.00; all postpaid.

in one end of the chassis. Temporarily mount the chassis with four screws and nuts to allow for adjustments. Make measurements to determine the location of the center of the light-sensitive semiconductor with respect to its location on the chassis wall.

The center of the lens must be in the same position on the opposite end. Make the hole for the lens about ¼″ smaller in diameter than the lens.

The crystal microphone and two switches for the transmitter are mounted on the same

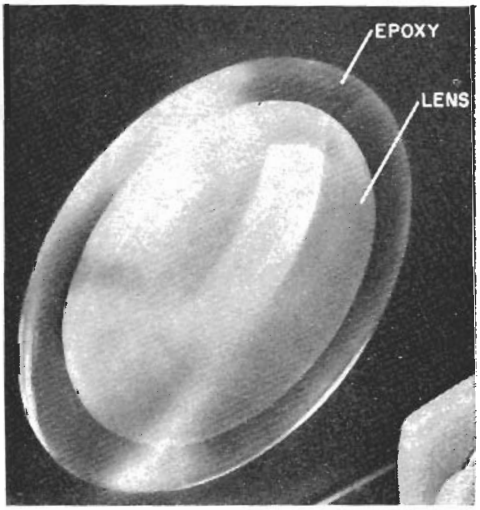

The lens hole should be slightly smaller than the lens. Use epoxy cement to mount the lens to inside of the chassis to prevent accidental loosening.

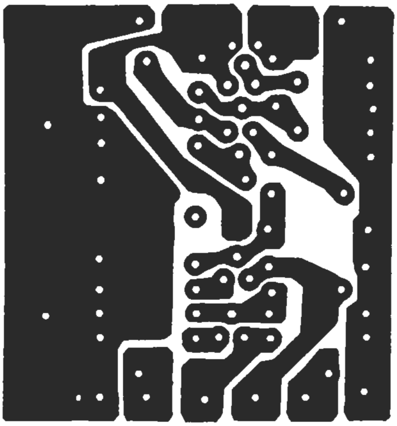

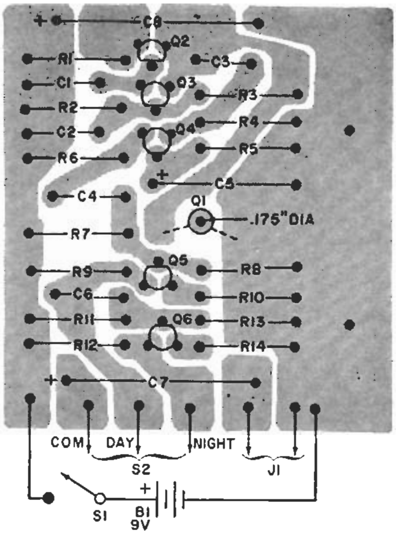

Fig. 4. When mounting Q1 make sure the window is facing the component side of the PC board. Connect collector to the foil that goes to R3 and Q1, and the emitter to the large common foil adjacent to the Q1 hole.

end as the PC board on the transmitter chassis. Cut a clean hole for acoustic access to the microphone, which is cemented to the inside of the chassis. The battery clips are mounted within the chassis, in a location where the batteries do not interfere with the light path from the lens to the LED.

On the receiver chassis use similar locations for the two switches and the earphone jack. Before mounting any components on the chassis, make sure that all mounting holes have been drilled and deburred; and, if desired, paint the chassis. Mount the PC boards with long screws to permit adjustment of focus. Put nuts on the screws on both sides of the boards to permit making the adjustment and locking the board in place.

When the wiring is complete and before mounting the lenses, test the units by aiming

(*Continued on page* 98)

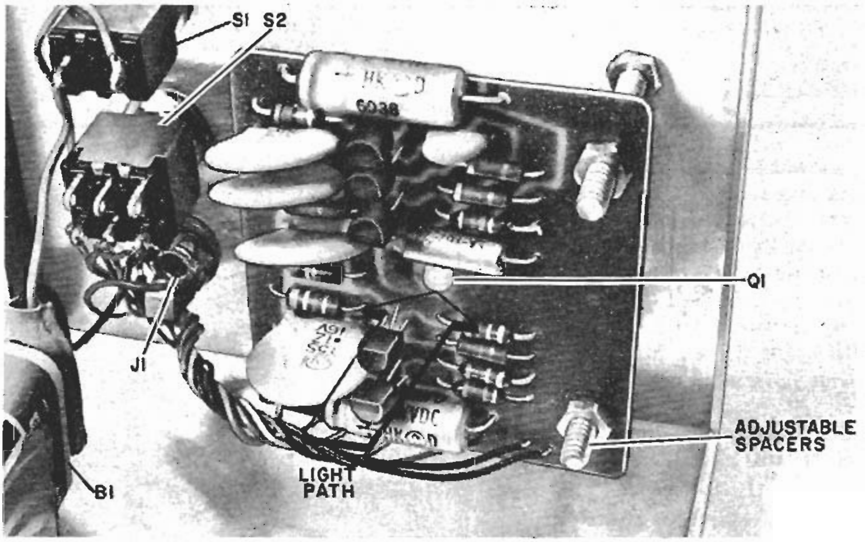

Like transmitter, assemble receiver board on four adjustable spacers so that the window of Q1 is at the focus of the lens. Once again, make sure batteries do not obstruct light.

OPTICOM

(*Continued from page* 50)

the active elements at each other. Turn on the transmitter and measure the voltage across *R11*. Adjust *R9* until this voltage is ½ volt. With both units operating, depress the transmitter pushbutton *S1* and move the receiver slightly until a loud tone is heard in the earphone. If no tone is heard, test the receiver by aiming it at a 117-volt 60-Hz light. If the receiver is operating properly, you should hear a distinct 60- or 120-Hz hum. If you do not, troubleshoot the receiver. Once it is working, and you still get no signal from the transmitter, troubleshoot it.

With both units working, mount the lenses using a commercially available sealant. Mount them on the inside of the chassis so that they cover the holes and their centers are in line with the light-sensitive semiconductor elements on the PC boards.

Optical Alignment. Hold each unit in the beam path of a relatively distant light source. DON'T use the sun for this step—a common light bulb about 10 feet away will do. Align the chassis so that the light falls on the window of the active optical element. Move the PC board back and forth until the light comes to a sharp focus on the element window. Once this position has been located, lock the mounting screws; and, though it is not necessary, place a spot of cement on the screws to insure permanence. Once both units have been aligned optically, check that the batteries are firmly mounted and assemble the chassis covers.

Range Testing. Place the transmitter on a level mount and point it along a path unimpeded by obstacles for at least several hundred feet. With the Test pushbutton (*S1*) either depressed or temporarily shorted, walk about 10 or 15 feet away from the front of the transmitter carrying the receiver. Turn on the receiver and point it toward the transmitter, varying the aim until you hear the tone. You will notice the extreme directionality of the system. This is what makes it so private—you must be on the beam to get the signal. In daylight, the range will not be as great, but it can be improved by switching the receiver Day-Night switch (*S2*) to the Night position. If you find the tight beam too constraining, you can de-focus the receiver by moving the PC board slightly in toward the lens. One side effect of doing this is a reduction in range.

Of course, if two systems have been built for two-way communication, do not exceed the range of the worst pair.

Operation. If you are using a pair of communicators as a network, the transmitter at one end should be aimed at the receiver of the other end and the transmitter Test button pushed to tone-modulate the transmitter. Both ends should be positioned until the tone at each end is heard loud and clear. Once the link has been established, the pushbutton is released and the microphone is used for speech communication. Manipulation of the receiver Day-Night switch (*S2*) will affect the range and volume.

Modifications. There are numerous modifications and variations that can be used with the Opticom. Telescopes or binoculars at either, or both, ends greatly increase the range. Even low-cost plastic Fresnel lenses may be used. Since the light collecting area of a circular lens is proportional to the square of the diameter, a small increase in diameter results in a significant increase in the effective area. For example, a lens three inches in diameter has more than twice the light collecting area of a two-inch lens.

Since a diverging beam of light follows an inverse square law and produces a light energy density dependent on the square of the distance from the light source, doubling the lens light area will, in theory, double the range of the Opticom. Of course, operation in daylight or over paths having varied thermal conditions will limit the range. Longest ranges can be obtained on clear, cool nights, with a telescope at each end.

The Opticom system may also be used as a short-distance rangefinder. Mount a bicycle reflector on the target and aim the tone-modulated transmitter at it. From a short distance away from the transmitter, aim the receiver at the reflector until the transmitter tone can be heard. The transmitter, target and receiver should form a triangle. Once the tone has been heard, simple geometry can be used to solve the triangle and calculate the distance.

Daylight range can be improved if the interior of the receiver chassis is painted flat black. Also, a long focal plane lens can be used to narrow the field of view and reduce background illumination. This tightens the beam and makes more accurate alignment necessary. Also consider the use of a black interior tube or shield protruding from the lens to reduce ambient light to the phototransistor.

Low-cost optical sensor overcomes ambient light

by Helge H. Mortensen
National Semiconductor Corp., Santa Clara, Calif.

A low-cost solid-state optical system can be useful for measurements of light transmission or reflection in medical applications, in the manufacture of paper, textiles, and paint, and in smoke detection. This optical measurement system, which uses the conventional light-chopping technique to overcome ambient light and electrical noise, can be built for about $13.

The system (Fig. 1) consists of a light-emitting-diode source, a photodiode sensor, operational amplifier A_1, driven by the sensor, integrator operational amplifier A_2, which is connected to the output from A_1 only when the LED is off, and op amp A_3, which is connected to the output from A_1 when the LED is on. A clock drives transistor Q to turn the LED on and off, and also drives field-effect-transistor switches S_1 and S_2 to connect either A_2 or A_3 to the A_1 output.

The waveforms in Fig. 2 illustrate the operation of the system. When the LED is on, the material being tested transmits some light to the sensor. The transmitted light, plus ambient light, produces a photosensor current that is converted and amplified in A_1. Electrical noise also contributes to the output from A_1.

To make the system insensitive to the ambient light and electrical pickup, the output from A_1 when the LED is off is fed to the integrator, consisting of A_2 and C_1. The integrator output is applied to the non-inverting terminal of A_1 as an offset voltage to cancel the unwanted output, reducing the voltage from A_1 to zero when the LED is off.

When the clock turns the LED on again, it also opens S_1 to disconnect the integrator from the A_1 output. However, capacitor C_1 holds the offset voltage on the noninverting terminal, so that the net voltage from A_1 results only from the LED light.

The effect of the integrator is to measure the magnitude of the ambient light and noise while the LED is off, remember this magnitude, and subtract it from the incoming signal when the LED is on. The output from A_2 is a measure of the ambient light and noise.

While the LED is on, FET switch S_2 is closed, so the output from A_1 is applied to capacitor C_2. The capacitor holds this voltage during the off period, while S_2 is open. Thus S_2 and C_2 constitute a sample-and-hold circuit. Amplifier A_3 serves as a simple output buffer, delivering the over-all output signal to whatever indicating meter or control circuit is to be driven by the optoelectronic measurement system. ☐

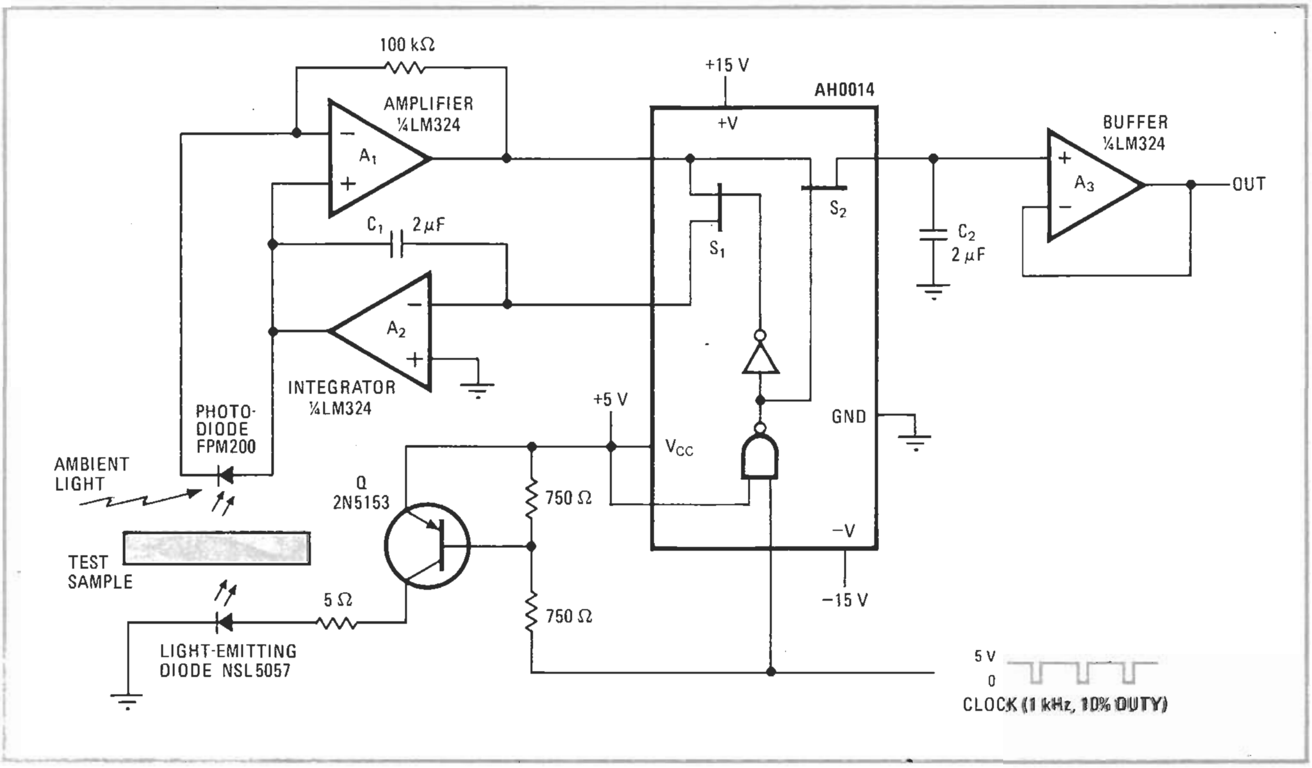

1. Keeping it light. Despite presence of ambient light, optoelectronic measurement system accurately indicates optical absorption or reflection by test sample. (For reflection measurement, geometry is changed so that LED light bounces from sample to sensor, instead of passing through sample.) Effects of stray light and electrical noise generate offset voltage that is subtracted from total voltage when LED is on.

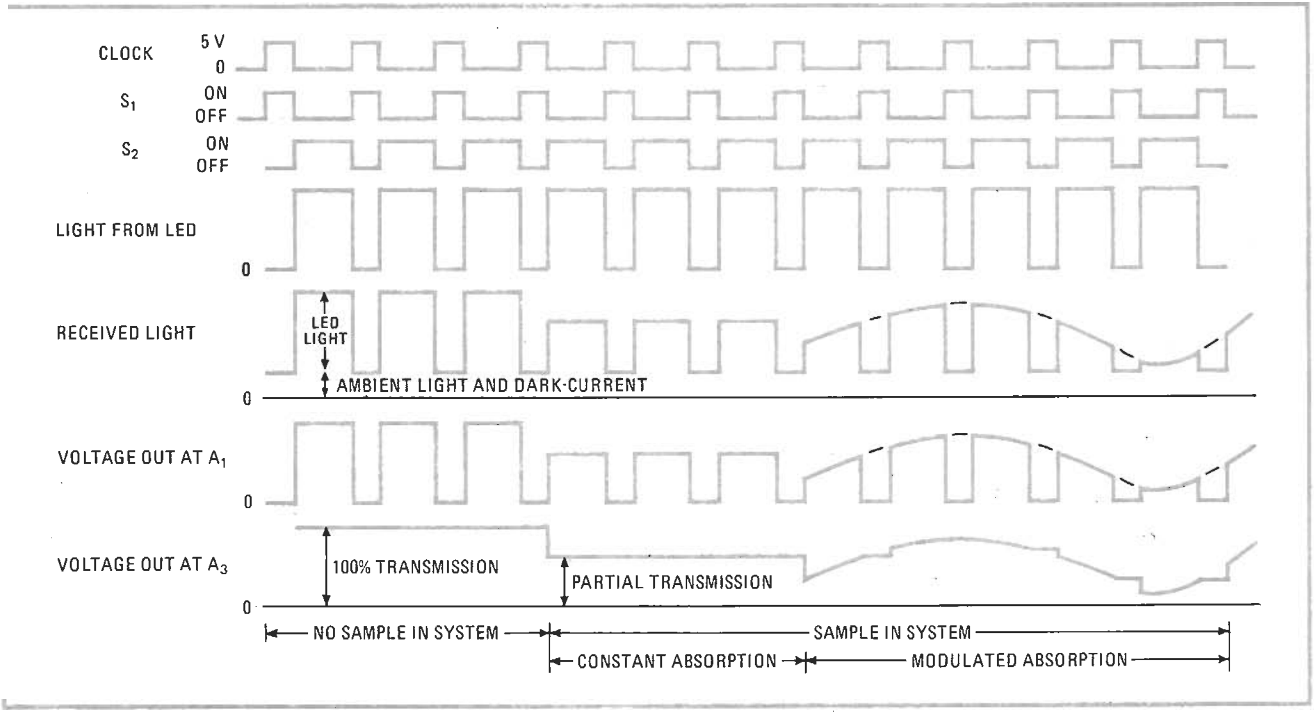

2. Chopping it right. Timing diagrams and waveforms illustrate operation of optoelectronic sensing and measurement system. Amplifier output is connected to integrator while LED is off, and integrator generates offset voltage to cancel outputs caused by ambient light and spurious voltages. When LED is on, amplifier output is connected to sample-and-hold and buffer, but offset still cancels background signals. (Proportions of timing diagrams are distorted for clarity. To avoid excessive dissipation, actual duty cycle of LED is 0.1.)

83

voltage-controlled LED brightness

C. Chapman

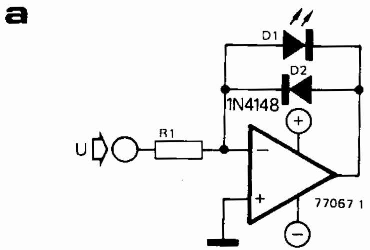

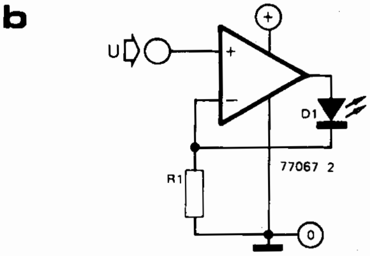

It is sometimes necessary to make the brightness of an LED vary in proportion to the magnitude of a DC control voltage, which in some cases may be less than the forward voltage drop of the LED.

The brightness of an LED is proportional to the current flowing through it, so the circuit required is a voltage/current converter which will provide a current through the LED independent of the forward voltage drop. This requirement is met by the well-known op-amp active rectifier circuit.

If a positive voltage is applied to the input in figure (a) then the output voltage will swing negative until the LED conducts. As the inverting input of the op-amp is a virtual earth point the current flowing through R1 and hence through the LED is $\frac{U}{R1}$. In the absence of an input the op-amp offset could cause the output to swing positive and exceed the reverse breakdown voltage of the LED. For this reason D2 is included to limit the maximum positive excursion to +0.6 V. Negative voltages may be used by reversing D1 and D2.

In figure (a) the input voltage must supply all the current taken by the LED, but figure (b) shows a circuit with a high input resistance that takes virtually no current from the input voltage.

The positive input voltage is applied to the non-inverting input of the op-amp, and the output voltage of the op-amp swings positive until the voltage on the inverting input is the same. A current $\frac{U}{R1}$ thus flows through R1 and since it is provided by the op-amp output it also flows through D1.

The value of R1 is simply $\frac{U_{max}}{I_{max}}$, where these are respectively the maximum input voltage and maximum LED current required. Any op-amp capable of supplying the required current may be used.

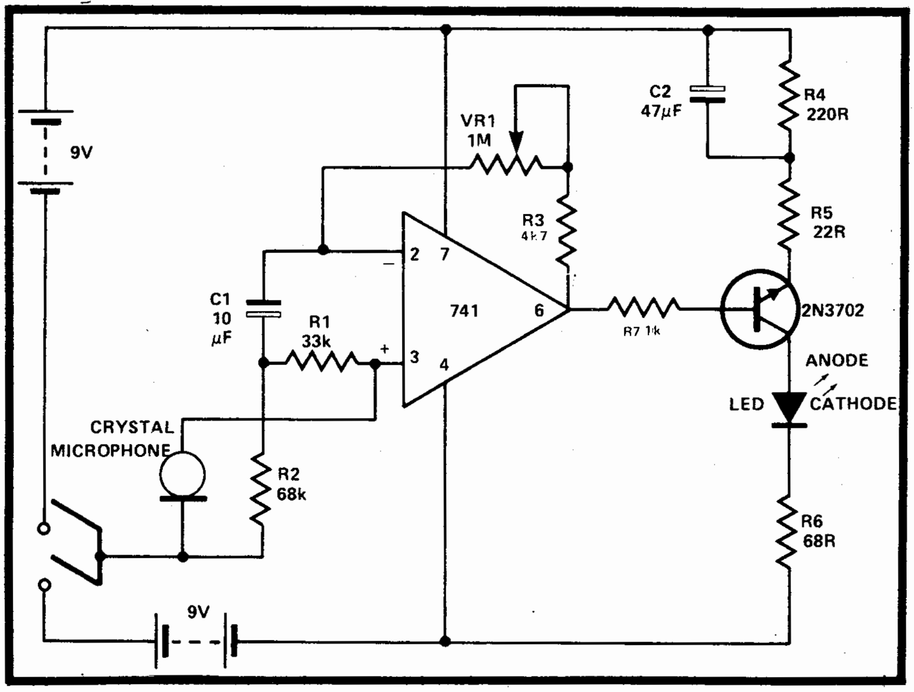

TRANSMITTER CIRCUIT

RECEIVER CIRCUIT

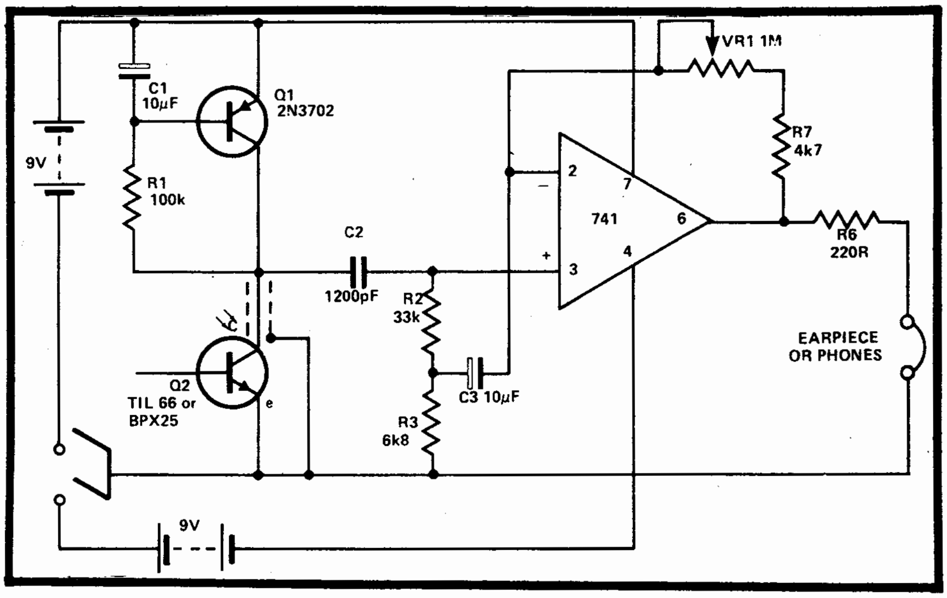

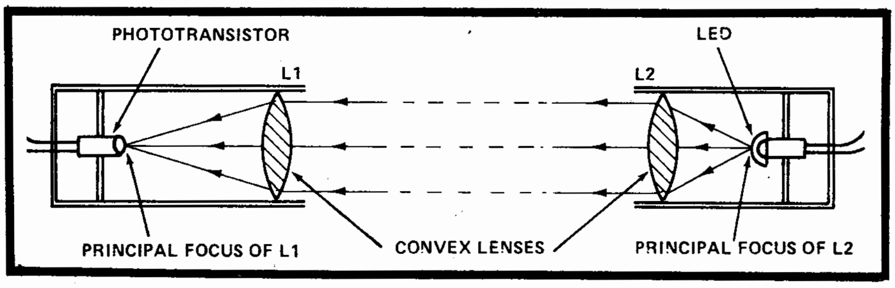

OPTICAL SYSTEM

upon examination of the output signals, this can be cured by connecting a 470pF capacitor between the pins 6 and 2 of the op amp. The constructor might consider modifying the circuits to operate from a single-ended supply; this necessitates using a voltage divider to raise the voltage at the noninverting terminal to about half the supply voltage on which is impressed the signal voltage.

The principle of the optical system employed is shown in the figure. To reduce the problems associated with alignment and focusing, when setting up the units at differing distances from each other, the transmitter is arranged to provide a parallel beam and the receiver to receive this beam. This collimation procedure is achieved by ensuring that the LED and phototransistor are at the principal focus of the relevant lens.

The diameters of the lenses should be such as to fully exploit the radiation contained in the radiating cone of the LED. In practice, 50mm diameter and 150mm focal length lenses were found to be suitable. Thicker (shorter focal length) lenses may be used thereby reducing the diameter required. However, the possibility arises that adjustment for collimation becomes more difficult with decreasing focal length partially due to the increase in lens aberrations.

Optocouplers Safely Isolate Integrated Power Modules

By Junhua He, Product Manager, Avago Technologies, Singapore

An interface circuit based on optocouplers provides galvanic isolation and common-mode noise rejection between low-voltage microcontroller units and high-voltage integrated power modules in motor-drive applications.

Optocouplers provide high-voltage isolation between a low-voltage device like a microcontroller or a pulse-width modulation (PWM) generator and a high-voltage device like an intelligent or integrated power module (IPM). The optocoupler is a key interface device because every high-voltage circuit must be compliant with equipment safety standards, such as IEC 60950 for IT equipment and IEC 60335 for household appliances. In testing for these standards, a high voltage is usually applied between low-voltage and high-voltage ports of the equipment. In these systems, the optocoupler isolates the low- to high-voltage interface to meet safety and protection standards.

Some common semiconductor component electrical safety standards applicable to optocouplers are IEC 60747-5-2 and UL 1577. A designer can select the appropriate optocouplers based on the relevant equipment safety standards. The table lists the characteristics of some optocouplers intended for high-voltage isolation. The key optocoupler parameters related to equipment safety ratings are working voltage, polluting degree, installation class and insulation level.

Various safety standards for industrial, home, office and IT equipment require a reinforced insulation level for electrical equipment powered by the ac line. Some parameters specified by equipment safety standards include external clearance, creepage, distance through insulation (DTI) or internal clearance, and comparative tracking index (CTI).

Fig. 1 shows a diagram of a motor-drive circuit between a microcontroller unit (MCU) and an IPM. Seven units of digital optocoupler ACPL-W456 isolate the IPM's seven gate driver inputs, one for the brake and six for the IGBTs. Using voltage sampling from two shunt resistors, two HCPL-7840 isolated amplifiers provide linear feedback from two motor phases to the MCU. Four HCPL-817 general-purpose phototransistor-type optocouplers isolate the IPM's fault feedback signals. All these optocouplers are compliant with reinforced safety-protection levels, because they secure a galvanic isolation boundary between low- and high-voltage circuits.

A three-phase IPM employs six gate drivers each for six high- and low-side IGBTs. Each gate driver needs a 10-V to 30-V power supply. The emitters of the low-side IGBT connect to the dc bus HV- as common reference ground, which allows all low-side gate drivers to share the same power supply (V_{CC_L} – GND1). Also integrated are overtemperature and overcurrent protection functions that feedback a fault

Part number	IEC/EN/DIN EN60747-5-2, V_{IORM} (V_{PK})	UL 1577, V_{ISO} (Vac/1 min)	CSA, V_{ISO} (Vac/1 min)	Package	Clearance, min. (mm)	Creepage, min. (mm)	DTI, min. (mm)	CTI, min. (V)
ACPL-P480	891	3750	3750	Stretched SO6	7	8	0.08	175
ACPL-W456	1140	3750	3750	Stretched SO6	8	8	0.08	175
HCPL-J454-600E	891	3750	3750	Wide-lead DIP8	8	8	0.5	175
HCNW4506	1414	5000	5000	Wide-body DIP8	9.6	10	1.0	200

Table. *Optocoupler characteristics.*

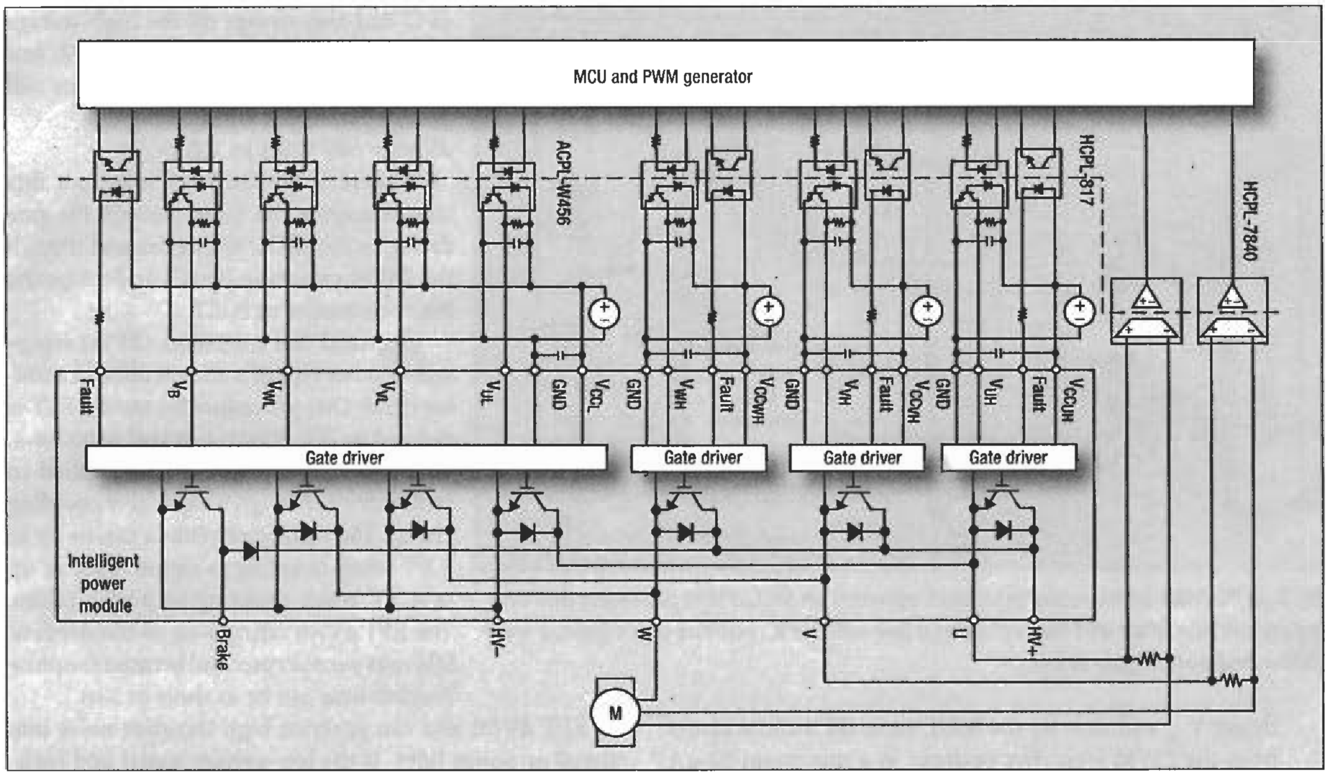

Fig. 1. *Optocouplers provide an isolated interface between a motor drive IPM and an MCU.*

signal to the host microcontroller.

The emitter of the high-side IGBT and the collector of the low-side IGBT connect to form one leg of a three-phase switch. By alternately turning high-side and low-side IGBTs on and off, the HV dc bus voltage switches the output to the respective phase of U, V or W load. The three-phase vectors are 120 degrees apart. With ground connecting to the collector of the low-side IGBTs, the ground of each high-side gate-driver circuit swings between HV– and HV+. Thus, the ground of each power supply for the high-side IGBT gate-driver circuit must float and be separated from each other.

A more robust solution is to have three isolated power supplies to each high-side gate-driver circuit. Bootstrapping the power supply with individual floating grounds is a cost-effective alternative. You can derive a bootstrapping power supply from either dc bus voltage or low-side power supply V_{CC_L}. Conventional IPM input logic and gate-driving circuits are integrated on a monolithic IC, and their power supply ranges from 15 V to 20 V.

This conventional IPM has an inverted logic. When the input voltage is high, the IGBT turns off; when the input voltage is low, the IGBT turns on. The ACPL-W456 optocoupler has an open-collector transistor output. Before the input side and MCU power up, the ACPL-W456 output logic level is high and keeps all IGBTs off. Typically, both the high-side floating power supplies ($V_{CC_{UH}}$, $V_{CC_{VH}}$, $V_{CC_{WH}}$) and low-side power supply (V_{CC_L}) are 15 V. The IPM driver input can operate at 15-V logic levels.

The ACPL-W456 high-voltage output can be calculated from:

$V_{OH} = V_{CC} - I_{OH} \times R_L$,

where V_{CC} equals the power-supply voltage, I_{OH} equals the output high transistor leakage current, V_{OH} equals the high-voltage output and R_L equals the output transistor pull-up resistor.

Select a moderate pull-up resistor value to retain suf-

What is an Optocoupler?

An optocoupler accepts an electrical input that causes the generation of a light beam directed toward a photodetector that converts the light to an electrical output signal. The light source and photodetector are physically separated so that light can travel across a barrier, but direct current cannot. Thus, an ac input to an optocoupler produces an electrically isolated ac output without the input's dc component. In many applications, there may be hundreds of dc volts difference between the optocoupler's input and output, while its ac input and output are similar.

Optocouplers are available with different types of output stages. Low-end devices contain a simple phototransistor output that is suitable for signal transmission. Other versions incorporate a photo MOSFET, which enables the optocoupler to serve as a solid-state relay. Meanwhile, photo IC-type optocouplers (which are the focus of this article and are shown in Fig. 2) contain a more complex output stage that enables them to interface directly with the gate-driver input of an IPM.

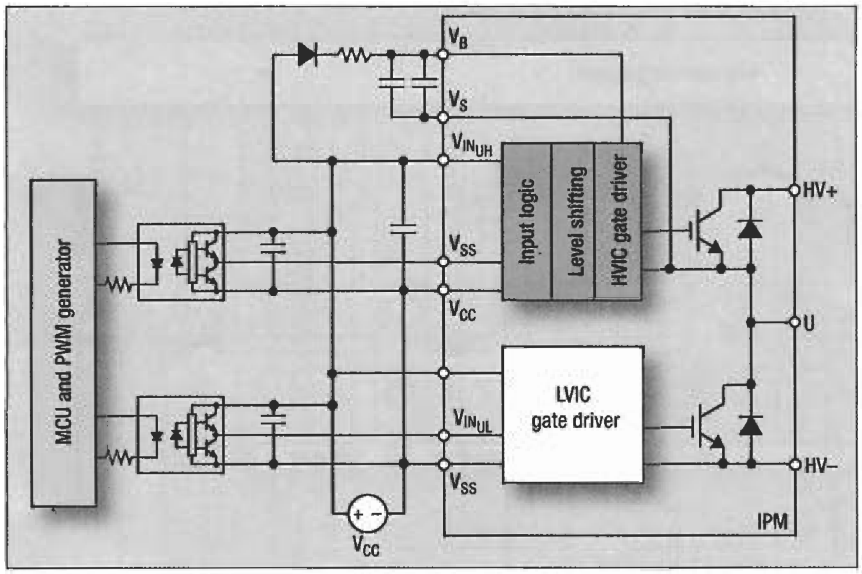

Fig. 2. *ACPL-P480 optocoupler interfaces between an MCU/PWM generator and one leg connection of an IPM that contains a low-voltage IC, positive-input logic, a level shifter and a HVIC gate driver.*

ficient V_{OH} and to drive the IGBT on or off without errors from the PWM logic. For example, at a maximum 50-µA leakage current, use a 20-kΩ pull-up resistor for a 15-V power supply or a 3-kΩ resistor for a 5-V power supply. Use the minimum V_{CC} voltage if it fluctuates.

Interfacing HVIC Circuits

IPM development has increasingly moved toward integrating high-voltage integrated circuits (HVICs) into gate-drive circuits. HVIC technology enables a low-voltage circuit to control high-voltage power devices through level shifting.

Fig. 2 shows the floating high-side gate-driver output circuit used with IGBTs, which derive power from separate bootstrapping power supplies (V_B). From low to high side, all gate-driver input circuits connect to the V_{CC} power supply and the input logic is compatible with 5 Vdc to 20 Vdc. Optocouplers are still required here for the interface between the MCU and IPM. The primary function is electrical safety isolation from low- to high-voltage circuits.

Optocouplers are tested and certified for worldwide electrical safety regulations using the interface between input and output pins. HVIC or IPM electrical safety is tested from the molding base to the circuit, not from the low-voltage port to the high-voltage port. If high voltage punctures the HVIC level-shifting dielectric layer or junctions, it short circuits from the output to input sides.

Besides electrical isolation from the MCU to IPM, optocouplers prevent transient noise from interfering with the low-voltage-side control circuits during IGBT switching. The voltage potential at the high-side IGBT emitter point U in Fig. 2 swings between the dc bus HV– and HV+, which is usually several hundreds, up to thousands, of volts. HVIC gate-driver power supply (V_S) is the same electrical point as U and also swings on the high-voltage bus. Calculations based on an 800-Vdc bus with IGBT V_{CE} rise/fall time at 0.1 µs will generate transient voltage of:

$dV/dt = 800\ V/0.1\ \mu s = 8\ kV/\mu s$.

If there is no electrical isolation, this transient spike can flood through the gate driver to the MCU controller and disturb the PWM switching signals or damage the microcontroller or IGBT.

Electrical fast transients (EFTs) represent another type of transient noise in a motor drive. One procedure for testing EFT is defined by IEC 60801-4 or IEC 61000-4-4, where a high-voltage burst is applied to motor drive through a capacitive coupling clamp. The voltage amplitude can be up to 2 kV when coupling to signal lines, or up to 4 kV when coupling to power cables. The EFT dV/dt rating is up to hundreds of kilovolts per microsecond because the pulse rise/fall time can be as short as 5 ns.

EFT dV/dt also can generate high transient noise into signal or power lines. If the low-voltage signal and high-voltage power circuits are not isolated, the transients interfere with each other and probably make a motor drive fail EFT testing.

CMR is a parameter that measures optocoupler common-mode transient rejection capability. CMR performance is tested using a common-mode voltage (V_{CM}) between input and output circuit grounds and during designated V_{CM} rise/fall time (Δt). When the output voltage is not disturbed by this transient voltage, then $CMR = V_{CM}/\Delta t$.

The rating of CMR is always related to the amplitude of the voltage difference of V_{CM}. When V_{CM} is increasing, CMR may drastically drop. Optocoupler ACPL-P480 has a specified minimum CMR of 20 kV/µs at a V_{CM} of 1000 V.

The ACPL-P480 output stage is a totem-pole transistor pair that doesn't need a pull-up resistor. Its output impedance at high levels is very low between V_{CC} and V_{OUT}, which is comparable with an open-collector transistor output whose impedance between V_{CC} and V_{OUT} is constrained by its pull-up resistor. Totem-pole output exhibits a good impedance margin when interfacing with an IPM, if the IPM's input impedance is not very high. The ACPL-4800's positive logic matches an IPM's positive logic when the control-side power supply is not on yet, so the IGBTs stay off.

A PWM runs at a constant frequency and variable pulse width. Industrial IPM switching frequency is selectable from 5 kHz to 20 kHz. To determine the requirements that ensure this pulse transmission without error logic, convert a 20-kHz switching signal to a 50-µs cycle period. If the PWM duty cycle varies from 1% to 99%, the narrowest pulse either high or low is 1% of the cycle period, that is:

$t_{MIN} = (1/20\ kHz) \times 1\% = 500\ ns$.

The basic rule of transmission for this shortest pulse is that an optocoupler's maximum propagation delay time must be less than t_{MIN} across the operating temperature. Typically, 2-MBd optocouplers are applicable like the aforementioned ACPL-W456.

Dead-Time Control

Optocouplers present propagation delay time differences from channel to channel, so any overlap in high- and low-side IGBTs will result in large currents flowing through the power devices. To prevent half-bridge IGBTs from shorting through, the MCU must provide dead-time control. Dead time is the period during which the MCU's PWM signal commands both the high- and low-side IGBTs to be off.

Minimizing dead time in PWM signals allows the motor to run more efficiently, so the designer must consider the propagation delay characteristics of the optocoupler as well as those of the IPM IGBT gate-driver circuit. Considering only the delay characteristics of the optocoupler (the characteristics of the IPM IGBT gate-driver circuit can be analyzed in the same way), it is important to know the minimum and maximum turn-on and turn-off propagation delay specifications t_{PLH}/t_{PHL} (for ACPL-P480 shown in Fig. 2), preferably over the required operating temperature range.

The limiting case of zero dead time occurs when the input to the high IGBT turns off at the same time the input to the low IGBT turns on. This case determines the minimum delay between the high-side optocoupler's LED turn-off and low-side optocoupler's LED turn-on, which is related to the worst-case optocoupler propagation delay difference (PDD). In Fig. 2, both the ACPL-P480 and IPM are positive logic, so a minimum dead time of zero occurs when the signal to turn on the low-channel LED is delayed by ($t_{PHL_{MAX}} - t_{PLH_{MIN}}$) from the high-side LED turn-off, where the propagation delays used to calculate PDD are taken at equal temperatures.

Typically, these optocouplers are located in close proximity to each other, so they are not the same as the $t_{PHL_{MAX}}$ and $t_{PLH_{MIN}}$ specified in the data sheet over the full operating temperature range. This delay, $t_{PHL_{MAX}} - t_{PLH_{MIN}}$, is the maximum value for the PDD specification PDD_{MAX}, which is specified at 250 ns for the ACPL-P480 over an operating temperature range of -40°C to 100°C.

Delaying the optocoupler's LED signal by PDD_{MAX} ensures that the minimum dead time is zero, but it does not tell a designer what the maximum dead time will be. The maximum dead time occurs in the highly unlikely case where the upper ACPL-P480 with the fastest t_{PHL} and lower one with the slowest t_{PLH} are in the same inverter leg. The maximum dead time in this case becomes the sum of the spread in the t_{PHL} and t_{PLH} propagation delays. The maximum dead time is also equivalent to the difference between the maximum and minimum PDD specifications:

$\text{Dead time}_{MAX} = PDD_{MAX} - PDD_{MIN}$.

The maximum dead time (due to the optocouplers) for the ACPL-P480 is 350 ns (= 250 ns – (-100 ns)) over an operating temperature range of -40°C to 100°C. **PETech**