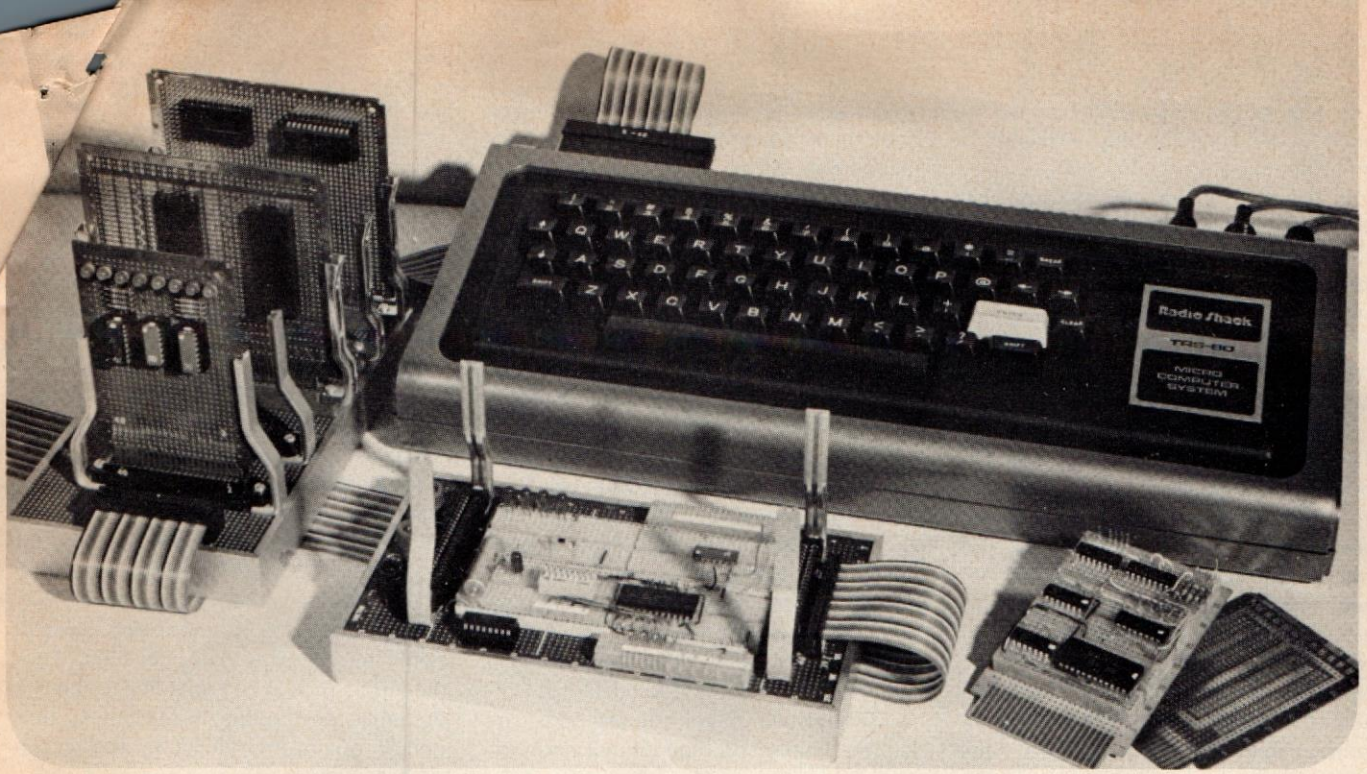

How to Add I/O Ports to Microcomputers

The basics of computer port operation and instructions for using them to expand computer flexibility

BY ADOLPH A. MANGIERI

FOR A microcomputer to "do something" truly useful, it must have input and output ports. The I/O ports make it possible for the computer to "interface" with practical devices—relays for appliance control, switches (or a keyboard) for feeding in desired commands, keyboard and video or hard-copy terminals for communicating with the computer, etc. Though 8080- and Z80-based micros can control up to 256 I/O ports, few are equipped with more than two. In this article, therefore, we will describe how to add I/O facilities to expand a Z80 or 8080 computer's flexibility.

To add the I/O ports described here to any Z80 or 8080 micro, you must have a basic familiarity with port operation and addressing and bus structure. (This information is detailed in manuals that accompany the computers.) A few ICs will get your computer up and running. Port examples presented here are for a Radio Shack TRS-80 Level I computer that uses the T-BUG monitor and a Level II computer with machine code and BASIC. You can use a solderless breadboard to perform experiments and to prototype circuits.

Port Basics. There are a number of different types of I/O ports in use. An elementary port may simply display information on a bank of LEDs, operate relays, or input data from a bank of switches. A complex port, on the other hand, can accommodate such sophisticated devices as an ASCII keyboard, full-graphics CRT monitor, and hard-copy terminal. Although all ports share the common computer bus, each is assigned a specific address and is provided with logic circuitry that enables the port only when it is addressed.

Machine-code instructions define CPU input and output operations. Two-byte instruction D3 XX initiates an output operation to a port. (D3 is the output instruction and the Xs indicate numbers for specific port addresses, such as D3 00, D3 01, D3 02, etc.) When a Z80 CPU fetches and executes this instruction, it generates an $\overline{\text{IOREQ}}$ (I/O request) pulse and a $\overline{\text{WR}}$ (write) pulse, both active low, as indicated by the lines above them. These are logically added in an external AND gate and delivered as the $\overline{\text{OUT}}$ pulse on pin 21 of the TRS-80's bus. The data byte in the CPU accumulator register is placed on data bus lines D0 through D7. Simultaneously, address byte XX is placed on address lines A0 through A7.

Port-select logic constantly examines the $\overline{\text{OUT}}$ and address lines, waiting for the simultaneous appearance of the $\overline{\text{OUT}}$ pulse and port address. When this occurs, the port is enabled and data on the data bus lines enters the port. Ad-

The key to this expanded use will be mass-acceptance of the personal or home computer.

In the 1960's, electronics hobbyists busied themselves with the design and construction of that "perfect" sound system. The spreading popularity of the hobby led to the commercialization and mass-production of those sophisticated systems to where they became readily available for a palatable cost.

In the 1970's, the hobbyist has also turned his attention to the computer. Developing games and other programs for the professional calculator once was a favorite diversion for computer specialists and mathematicians. As microcomputer modules became more readily available, the experimentor turned the calculator-based hobby into a microcomputer-based hobby. As happened with high-fidelity and stereo systems, electronics manufacturers have taken note of this spreading interest, developing first a series of personal computers specifically for the enthusiast and now products for even broader markets. Home computers are now available that require no computer-expertise or knowledge of programming. Software comes in pre-programmed ROM packages that simply plug into the computer much like the video game cassettes plug into the video games introduced in the mid-70's.

It's anticipated that the day will come in the future when a home computer will be another appliance designed to simplify and expand communications capabilities within the home. Through standard modern interfacing, it will connect to the telephone to provide the advantages of automated audio and visual communications. Electronic mail, electronic newspapers and automated communications will become commonplace. With an interface to the home electrical system, energy management and automated electrical control of any kind will be made possible.

The microcomputer will also make complex fire and security control systems practical realities for the consumer. Security systems will detect the presence of an intruder, and indicate the point of entry. This information will be displayed to both the homeowner and police via video monitors. Fire alarms will sense the location of a fire, calculate intensity and speed of growth, signal the occupants, indicate the safest route out of the house, and also alert the local fire department—again providing details of the fire via a video monitor.

Wouldn't it be convenient to have a microcomputer-controlled lawnmower that, once it was run through the mowing sequence, would automatically follow that sequence time-and-time again? With the simple addition of radio-control, it might even be programmed to back itself out of the tool shed and start the mowing job.

The family car will not escape microcomputer control. In some of the luxury models, it is there now! A microcomputer will control brakes to equalize application of pressure to minimize skidding. The same microcomputer will control engine operation to minimize exhaust emissions and maximize economy. With recent advances in speech synthesis, the day will come when the family car will *tell* the driver when the fuel is low, oil pressure is approaching a danger point or it's time to buckle up.

The microcomputer has just begun to tap the immense potential that exists in the field of education. Learning aids such as TI's Little Professor™ and Speak & Spell™, with other products, have found wide acceptance as simple, low-cost handheld devices that help make learning fun. Calculators and computers are being adapted to classroom work to help teach not only the fundamentals of arithmetic but also the use of math as a pure, universal language.

Teacher and student response to calculator-oriented mathematic learning aids has been so enthusiastic that studies are now being conducted in ways to utilize the technology in other subjects. The time is not far off when students will be using calculator or computer-extended materials to learn reading, writing, spelling, geography, history and foreign languages. The science is still in its infancy, but is already perceived as a positive educational influence on many levels. Computer simulators, for example, of the kind most readily associated with driver education and flight training, will eventually be available in smaller, maybe even portable, units to provide specialized instruction in a number of diversified fields—from shop training to first aid, from bridge lessons to computer maintenance.

Among all of the new features, one to evolve will be the most important—ease of programming. Simplified programmability will lead to ease of use in applications undreamed of today. An exciting new area of development is synthetic speech and voice recognition. The technology to enable appliances to "talk" is not only here, but economically practical, as is evident in TI's "talking" learning aid, Speak & Spell. And some electronic experts predict that speech recognition will be cost-effective within another three to five years. By the mid-1980's, appliances may be intelligent enough to carry on simple conversations with consumers. One of man's fondest dreams—the interactive machine that listens, responds and talks back to him—is the next big challenge.

In the not-too-distant future, a homemaker may well put a frozen roast in a microwave oven before leaving for a day's shopping. After lunch she (or he) calls home and accesses the oven through the home computer, telling it to turn on at 4:00 p.m. The oven responds, "What temperature, please?" A few hours later, the homemaker arrives home and tells the door to open. The electronic lock recognizes the voice as authentic and opens the door. As the person enters the house, lights turn on as the room is entered and off as it is left—automatically! The oven will eventually announce over the home intercom, "The roast is ready."

Is this science fiction? Not at all! The technology to produce such a system is already at hand. Mass production for the consumer will have to wait a while, however. And behind it all is the evolution of the microcomputer revolution.

In the mid-Sixties, Margaret Meade described society as being in the midst of an information explosion, a situation where technology has provided the capability of gathering, organizing, storing and disseminating far more information much faster than ever believed possible; but man has yet to learn to synthesize this information. This is the problem facing the consumer electronics industry today. There is a wealth of information, products and capabilities available now through microelectronics. The "problem" is for creative manufacturers to synthesize this information into more efficient and useful appliances.

The nature of the consumer electronics industry is changing, as is the nature of the job functions within it. Individual product designers now work together as systems designers. Engineers who once rarely left their drawing boards are now active in consumer research. And manufacturers cannot afford to ignore human factors in product and control design or the potential of newly developed microelectronics. If they do, along with designers of the wringer washing machine, the horsedrawn buggy, and the ice box, they'll wonder what ever happened to the good old days. ◇

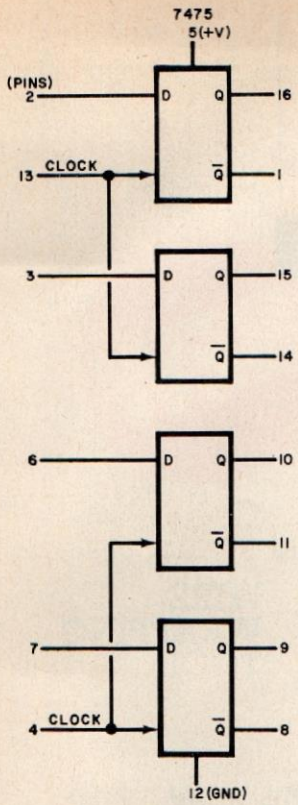

TRUTH TABLE

CLK	D	Q EQUALS
0	X	LATCH
1	0	0
1	1	1

X= DON'T CARE STATE

Fig. 1. Internal logic of 7475 (including pin-out) and truth table for each latch.

dress bytes can be from 00 to FF (hexidecimal) to allow up to 256 output ports to be used with suitable decoding.

Machine-code instructions DB XX (input instruction with port address) initiates an input operation from the selected input port. Here, $\overline{IOREQ}$ and $\overline{RD}$ (read) pulses are added in an external AND gate and delivered as the $\overline{IN}$ pulse on pin 19 of the TRS-80's bus.

Port logic detects the simultaneous appearance of the $\overline{IN}$ pulse and port address and enables the port. At this time, the port connects its output lines to the data bus and the CPU copies any data present on the bus into the accumulator register. After data acceptance, the port frees the data bus for other purposes. The accumulator register is the source and destination of data with the D3 and DB instructions. The Z80 instruction set includes a number of special I/O instructions that effect data transfers to and from other registers and memory, with some instructions allowing movement of data in blocks.

Output and input ports can have the same address, such as output D301 and input DB 01. Port-select logic differentiates between the two by $\overline{OUT}$ and $\overline{IN}$ pulses. "Standard" or "isolated" I/O addressing allows up to 256 input and 256 output ports to be addressed by the computer. This is ample for just about any imaginable home computer system.

An alternative form of port addressing employs memory-mapped I/O. Each port, in effect, is addressed as memory. This method allows thousands of ports to be addressed and affords some programming advantages.

Simple Output Port. Inexpensive 7475 TTL ICs can be used to make 2-, 4-, and 8-bit latching-type output ports. As shown in the truth table in Fig. 1, data latch output Q follows input data D as long as the clock (CLK) line is high. When the CLK line goes low, data D is latched to output Q. The internal logic of the 7475, including pinout, is shown in Fig. 1. Note that each clock line drives two latches.

Two 7475's can be connected as an 8-bit latching port (Fig. 2). LEDs connected to the $\overline{Q}$ outputs turn on when their respective data D input is high.

The port shown in Fig. 2 is addressed by instruction D3 00, which places binary 00000000 on lines A0 through A7. The least-significant bit is on A0. When $\overline{OUT}$ and $\overline{A0}$ are true, the port is enabled by *IC3A* and the data byte held in the CPU accumulator register is displayed in binary on the LEDs. Address line bits A1 through A7 are "don't cares," provided they are not assigned to other ports. Hence, instruction D3 FE also selects this port because bit A0 is low.

Ports that do not require all eight data bits are easily arranged. To set up two 4-bit ports, break the clock line at X and add the second NOR gate (Fig. 2). Port *IC1* is enabled by instruction D3 01, which places binary 00000001 on the address lines. The 1 bit on line $\overline{A0}$ causes selection of port *IC1*. You can also separate the four clock lines and arrange four 2-bit ports, using address lines A2 and A3 for port selection.

Progressive addressing allows up to eight input and output ports to be used. One or more ports can be enabled by one instruction, simplifying programming and hardware requirements. Although it requires additional ICs in each port, full decoding of the address bits allows up to 256 input and output ports. For example, the TRS-80 cassette port is fully decoded and selected by instruction D3 FF. For this and other reasons, the ports described here are assigned active-low address bits for selection. For an elementary example of both fully decoded port and memory-mapped port, refer to the TRS-80 Technical Reference Handbook.

Complex I/O Port. Intel's versatile 8212 I/O chip can be used as either a latching or a nonlatching output port, input port, gated bus driver, or straight-

(Continued on page 56)

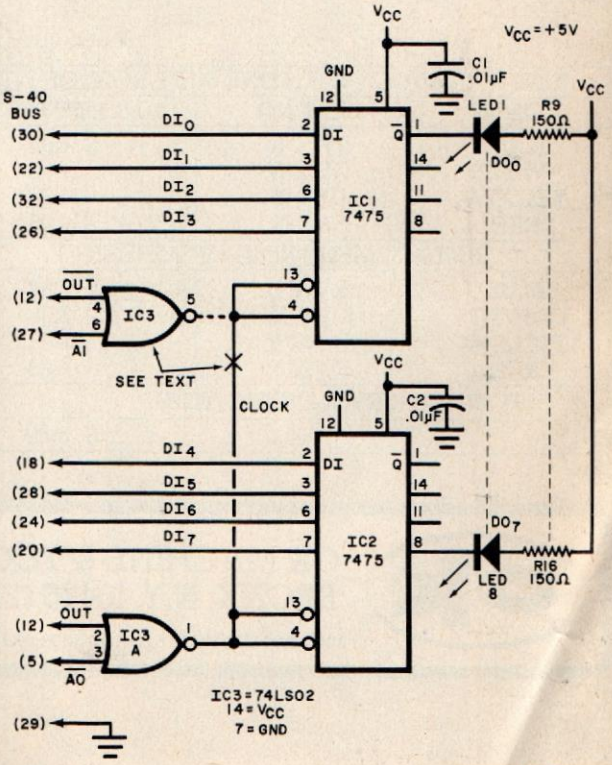

Fig. 2. Two 7475s and a 74LS02 can be used to form an 8-bit port or, with slight modifications, two 4-bit or four 2-bit ports.

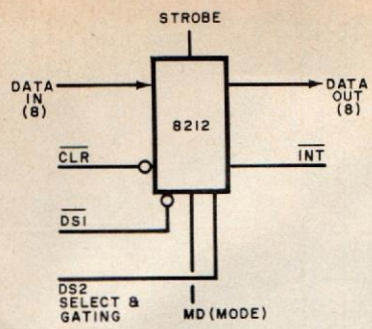

STATE	STB	MD	$(\overline{DS1} \cdot DS2)$	D OUT EQUALS
1	0	0	0	3-STATE
2	1	0	0	3-STATE
3	0	1	0	LATCH
4	1	1	0	LATCH
5	0	0	1	LATCH
6	1	0	1	DATA IN
7	0	1	1	DATA IN
8	1	1	1	DATA IN

Fig. 3. The 8212, an 8-bit I/O port, and its truth table. This IC has tri-state provisions. That is, in one mode it can be electrically isolated from the system bus.

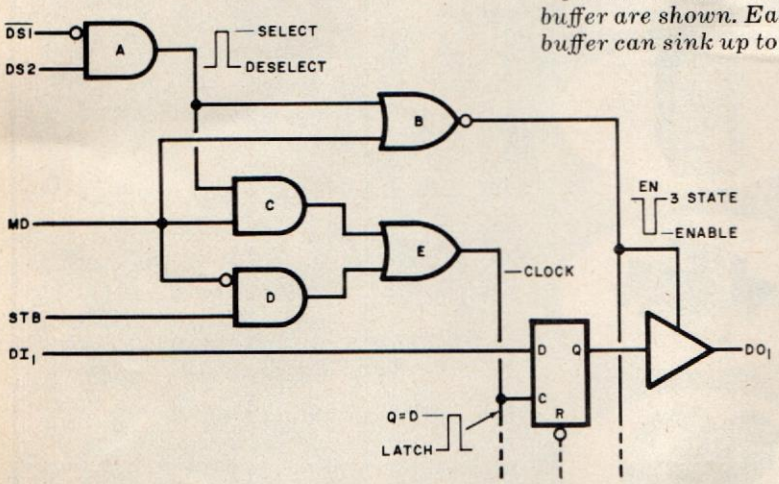

Fig. 4. A portion of the internal control logic of the 8212. Only one of its eight latches and output buffer are shown. Each output buffer can sink up to 15 mA.

(Continued from page 52)

through buffer, to name just a few of its applications. This high-speed Schottky TTL device includes eight data latches and output buffers that can be tri-stated (switched to high impedance). Each buffer can sink up to 15 mA.

The function diagram of the 8212 is shown in Fig. 3, which also illustrates chip signals and the IC's truth table. A portion of the internal control logic and one of the latches and its output buffer are illustrated in Fig. 4. For simplicity, CPU-interrupt control logic, which controls interrupt output INT, is omitted.

Familiarity with the control logic simplifies application. Mode control line MD is tied low (logic 0 or ground) for the input-port mode and high (logic 1 or V_{CC}) for the output-port mode. Lines $\overline{DS1}$ and DS2 are the device-select, or gating-control, lines. When $\overline{DS1} \cdot DS2$ is 1, the device is selected by a high at the output of gate A.

The data-latch clock is strobed two ways. When line MD is low, gate C is defeated and strobe line STB passes a pulse through gates D and E to the clock line. When line MD is high, gate D is defeated and gate A passes a pulse through gates C and E to the clock line. Similarly, the output buffers are also operated two ways. When line MD is high, gate B goes low and enables the buffers continuously. This is a necessary requirement for a latching-output port. When line MD is low, the selected pulse from gate A passes through gate B to enable the buffers briefly, after which they return to tri-state. This is a necessary requirement for an input port.

The truth table is simple to use if you keep in mind the port or application requirements. To illustrate, let us implement an input port. In this case, MD must be tied low (grounded). Strike out all rows or states listing MD as 1 in the Fig. 3 truth table. Since MD is assigned, strike out column MD. We know from port basics that the input port must not latch onto the data bus. This eliminates state 5 and all that remain are states 1, 2, and 6, as shown in the reduced truth table in Fig. 5.

FIRST REDUCED TRUTH TABLE

STATE	STB	$\overline{DS1} \cdot DS2$	D OUT EQUALS
1	0	0	3-STATE
2	1	0	3-STATE
6	1	1	DATA IN

FINAL TRUTH TABLE

STATE	STB	$\overline{DS1} \cdot DS2$	D OUT EQUALS
1	0	0	3-STATE
6	1	1	DATA IN

Fig. 5. Reduction of the truth table for the 8212.

Clearly, state 6 must be retained for device selection and data transfer. Recalling that the STB line must be used to strobe the latches when line MD is 0, state 2 is deleted so that STB can alternate between 1 and 0. This results in the final truth table shown. Check this truth table to be sure it accomplishes the application's requirements. In this case, state 6 enables the port, placing port data on the data bus. State 1 "deselects" the port and tri-states the output buffers as required.

In the final step, computer pulses are assigned to $\overline{DS1}$, DS2, and STB. Available computer pulses are $\overline{IN}$ and $\overline{A0}$, the latter assigned to this port and active low. Notice that STB and DS2 are active high. With $\overline{DS1}$ active low, connect $\overline{IN}$ to $\overline{DS1}$. Pass $\overline{A0}$ through inverter *IC6A* and then to both STB and DS2 (Fig. 6).

To use the 8212 as a latching output port, tie MD high (to V_{CC}). Port requirements include device select with data in (state 7 or 8) and device deselect with latching (state 3 or 4). STB is a "don't care" line. Connect computer output pulse $\overline{OUT}$ to line $\overline{DS1}$. Address line bit $\overline{A0}$ is inverted by *IC7A* and connected to line DS2 (Fig. 6). The LED is off when D is high. If this is objectionable, add inverting buffers between port outputs and light-emitting diodes.

For the 8212 to serve as a straight-through buffer or line driver, requirements are device select, data out equals data in, and continuously enabled output buffers. State 8 will effect these requirements. Connect line MD and DS2 to V_{CC} and line $\overline{DS1}$ to ground. For use as a bi-directional bus driver, interrupting ports, etc., see the Intel 8080 User's Manual.

Computer Hookup. The TRS-80 accepts a special 40-contact card edge connector. However, you can substitute a standard 44-contact card socket, such as a Vector No. R644-2, after modifying it. To do this, fit a thin piece of hard plastic into the connector slot to cover the two top and bottom contacts at one end of the connector. You now have a 44-contact connector that for all practical purposes has been modified to serve as a 40-contact connector.

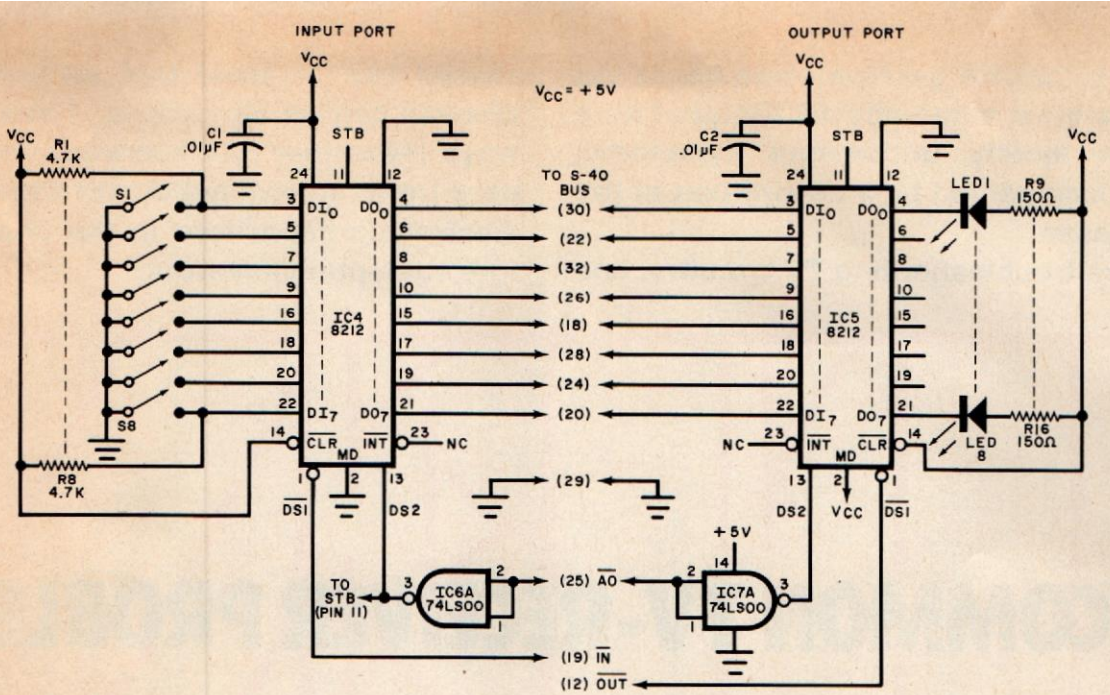

Fig. 6. An experimental I/O port using a pair of 8212s with switch inputs and light-emitting diode outputs.

PARTS LIST

C1,C2—0.01-μF disc capacitor
IC1,IC2—7475
IC3—74LS02 NOR gate
IC4,IC5—8212 8-bit I/O port
IC6,IC7—74LS00 low-power quad 2-input NAND gate
LED1 through LED8—Light emitting diode
R1 through R8—4700-ohm resistor
R9 through R16—150-ohm resistor
S1 through S8—Spst switch

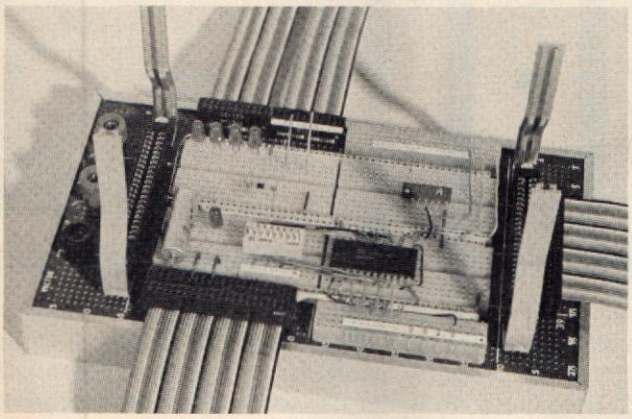

Fig. 7. Three computer links are provided on this patchboard using solderless circuit connections. Wire-Wrapping is used on connectors and under chassis.

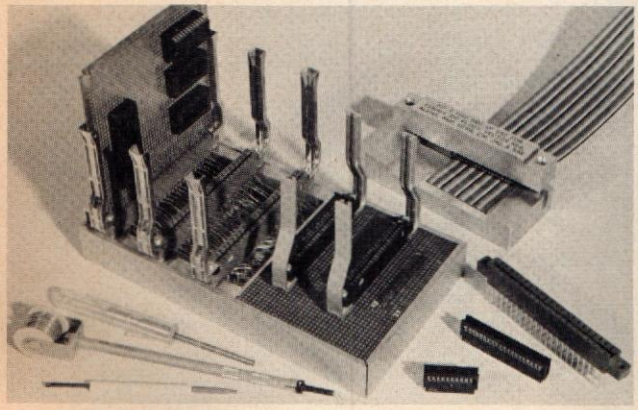

Fig. 8. Typical plug-in card chassis. Three large sockets are Vector Electronics R644-3 with mating BR27-D card guides. Smaller connectors are R644-2 with BR27 card guides. Wire-forming and chiseling tools are also shown.

Install the modified connector in the TRS-80, making sure that lateral play barely exceeds 1/64" (0.4 mm). Carefully remove the modified connector and cement the small plastic pieces solidly in place. Recheck connector fit before the cement sets. Then use a lettering kit to mark an UP label on the up side of the connector.

Solder a 12" to 18" (30.5 to 45.7 cm) length of color-coded 40-conductor ribbon cable, such as Vector's No. KW2-40, to the connector. Make a record of which conductor connects to and what signals are present on each pin. Refer to the TRS-80 Technical Reference Manual or User's Manual for pin assignments.

At this point, you can choose any of a number of conventional construction approaches. Perhaps the simplest is to use a solderless breadboard on which to experiment with the I/O port. A 40-pin IDC connector, such as a Vector No. KS2-40, can be fitted to the end of the cable, using a Vector No. P187 IDC fixture to make the connection. A mating connector can then be mounted on the solderless breadboard. Shown in Fig. 7 is this author's experimental setup, which includes wiring to a home-built card cage (Fig. 8) to support Wire Wrap circuit cards.

In Conclusion. From the foregoing, you can see that it is relatively simple to interface a computer with external devices to perform useful operations. You could conceivably use all 256 I/O ports to control everything in your home. ◇