INTRODUCTION

1.1 GENERAL

The Clear-Com system is a closed circuit intercommunication system designed for clear- two-way communication in high noise environments. Low impedance lines (200 ohms) and specially designed circuitry make the system virtually immune to RF and dimmer noise. The basic system consists of a main station and from one to 40 remote stations, joined by interconnecting cable. Main stations are available in portable cases (single channel CS-100 and dual-channel CS-200), as well as rack-mountable enclosures (CS-100K and CS-200K). There are several interchangeable remote stations: the RS-100A "belt pack", the KB-100 "King Biscuit" mic/speaker unit, the MR-102 wall-mount unit, the KB-111 wall mount unit with speaker, and the KB-111P portable remote unit with speaker. The master gain control, located on the main station rear panel, allows the operator to set the overall gain in accordance with the number of remote stations being used.

All remote stations, except the MR-102, have adjustable side tone which enables the user to vary the amount of his or her own voice in the headset, handset or speaker for maximum intelligibility with minimum chance of feedback. All remote stations have their own volume control for adjusting the level in the earpiece (s), call switches and call lights for signaling from other stations.

Clear-Com is a distributed amplifier system, with each remote station housing its own mic preamplifier and headset power amplifier (+20dBm max output). The main station supplies 28V dc necessary for operating all circuits, and power is carried to remote stations via the same interconnecting cable which carries the audio signals. The main stations also have an auxiliary, line-level input with its own volume control which allows mixing of an external program with the intercom line. This is useful for program monitoring.

A power-supply only main station is available, the model PS-3000. Standard microphone cables (XLR-3 type connectors) are used for interconnection in most cases; the WP-1 and WP-2 wall-mount connector plates may be used in some permanent installations. Interconnect cables, and a 4-way splitter (the Quadrapuss) are available from Clear-Com.

SECTION II

INSTALLATION

2.1 EQUIPMENT SELECTION

2.1.1 FIXED SYSTEM MAIN STATIONS

For permanent intercom systems, main station equipment is usually mounted in a standard 19" rack for security and convenience. For this reason, we recommend either the CS-100K single-channel main station or the CS-200K dual-channel main station. However, if an intercom station is not needed at the area where the equipment rack is located, then the PS-3000 power supply (without intercom station) should be substituted.

2.1.2 FIXED SYSTEM REMOTE STATIONS

In permanent installations, it is usually desireable to run interconnecting cables through conduits, and to bring them to wall-mounted remote stations, or to wall plates for connection to portable remote stations. We recommend the MR-102 wall-mount remote station, or the KB-111 wall mount remote station with paging speaker. If you don't wish to have the remote station built into the wall, then use our WP-1 or WP-2 wall plates with any of our portable remote stations; the RS-100A "belt pack", the KB-100 "King Biscuit" mic/speaker station, or the KB-111P headset/handset station with paging speaker.

2.1.3 PORTABLE SYSTEM MAIN STATIONS

For portable intercom systems, main station equipment must be compact, lightweight, and easily moved for storage. The CS-100 single-channel main station and CS-200 dual-channel main station fulfill these requirements.

2.1.4 PORTABLE SYSTEM REMOTE STATIONS

The RS-100A "belt pack" is the key to our truly flexible portable intercom system. Because each RS-100A has a pair of input and extension connectors, many stations may be "daisy chained" together along one interconnect path. This saves cable and simplifies installation and break down.

The KB-100 "King Biscuit" mic/speaker remote station is ideal for use in remote trucks and in studio control rooms, as well as on stage during setup of live shows. It can be used either in push-to-talk mode, or in an optional "hands-free" mode where the speaker and microphone both function simultaneously. In the latter mode, 2-way communication is possible at distances up to three or four feet, depending on ambient noise levels.

2.1.5. CLEAR-COM HEADSETS AND HANDSETS

Clear-Com has three standard headsets available, all with boom-mounted, noise-cancelling microphones. The CC-240 is a double-muff headset, and the CC-75 is a single-muff headset, both with boom-activated mics. The PH-7 is a double muff headset which has wider frequency response, greater isolation from ambient noise, and sturdier physical construction than the CC-240, and no mic switch in the boom. All units have field-replaceable cords. The HS-6 telephone-style handset is interchangeable with the above headsets.

All remote stations can drive 2 headsets with only a slight reduction in level. A Y-cord can be made up using the diagram below and the specified wire. Extension cords for the headset can also be made out of this same cable or other separately shielded cable such as Belden 8734, 8416 or 9454. Extensions should be limited to approximately 15' due to the possibility of capacity coupling between the microphone signal and the headset signal which would cause a loss of high frequency response or oscillation.

CAUTION: DO NOT connect microphone ground and earphone ground together at any point.

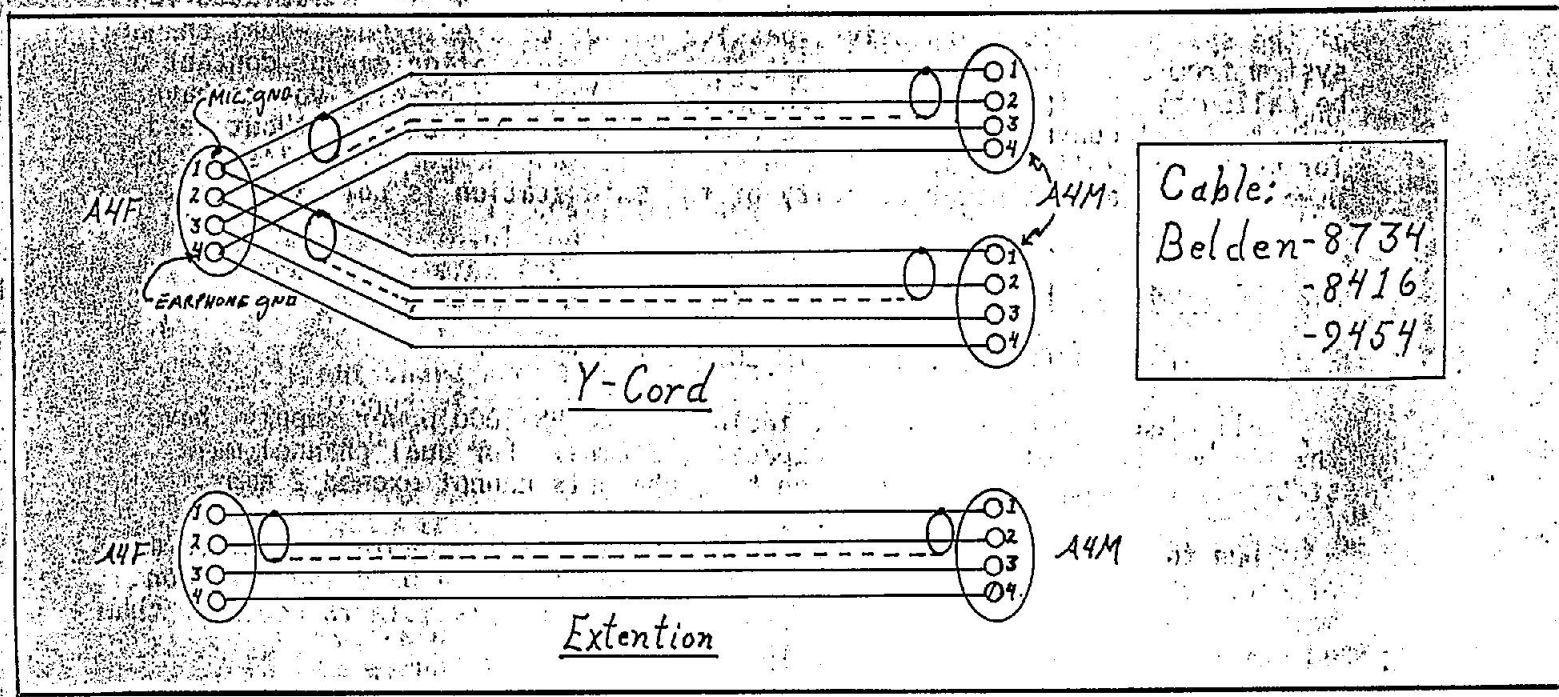

2.1.6. OTHER HEADSETS

Non-Clear-Com headsets are available from Clear-Com or local dealers. These are recommended for special applications:

Beyer DT-108	Single-muff, high-fidelity earpiece with boom mic; may be used for monitoring and intercom.
Shure SM-12	Miniature, lightweight type with boom mic and hearing-aid type earpiece.

2.1.6 INTERFACE TO OTHER COMMUNICATION SYSTEMS

The AC-10 Adapt-a-Com is a universal adapter which enables Clear-Com to be interfaced with any other intercom or communications link. When existing non-Clear-Com installations are being upgraded to Clear-Com equipment, portions of the older system can be retained. Since Adapt-a-Com works in 2-, 3- and 4-wire systems, it virtually guarantees compatibility with any house intercom equipment.

Because it will simulate a carbon mic, Adapt-a-Com can be plugged into the headset jack on a TV camera, control unit, or other 2-wire systems. Adapt-a-Com operates with telephone company and competitive model 3-wire intercoms, facilitates on-line intercom via standard telephone systems, and aids in direct communication between the studio and remote locations via 2 or 4 wire dedicated TEL.CO. pairs.

2.1.7 AUDIO ISOLATION OF PARTS OF THE INTERCOM SYSTEM

In certain applications, it may be desireable to isolate conversations in one section of the system. In these instances, the BA-1 in-line isolator may be used to block audio while allowing power to flow to the isolated leg of the system. This inexpensive, passive device creates a quasi-dual channel system from a single channel, except that the main station cannot contact or be called by the isolated leg of the system. The BA-1 enables you to have private local conversations along a common interconnect cable without need for multiple cabling or several main stations. Any number of BA-1's may be used, so long as the power capacity of the main station is not exceeded.

2.2 MAXIMUM NUMBER OF STATIONS AND CABLE CONSIDERATIONS

2.2.1 MAIN STATION CURRENT AND IMPEDANCE LIMITS

All Clear-Com main stations, including the PS-3000 power supply, have the same maximum output current capacity, 2 amps. For dual channel main stations, the total current draw on both channels cannot exceed 2 amps.

Due to impedance considerations, regardless of the cable lengths or mix of remote stations, 40 stations are the maximum that can be driven from one main station. (In certain circumstances, it may be possible to use more than 40 stations; contact the factory for details.)

2.2.2 CALCULATING THE MAXIMUM NUMBER OF REMOTE STATIONS

In installations with less than 500 feet total interconnecting cable, only the remote station current requirements need be considered. One main station will support up to 40 RS-100A or MR-102 remote stations, or up to 15 KB-100 or KB-111 remote stations.

When calculating the maximum current drain, only two figures need be considered; a maximum current drain of 40 ma in the RS-100A or MR-102, and an average current drain of 130ma in the KB-100 or KB-111. Thus, an equation for maximum stations would be as follows:

$$X = \text{Number of RS-100A's + MR-102's} \leq 40.$$

$$Y = \text{Number of KB-100's + KB-111's} \leq 15.$$

Therefore,

$$0.04X + 0.13Y \leq 2.0$$

2.2.3 CABLES

Where cable lengths greater than 500 feet are involved, the maximum number of remote stations, depends on four factors; the current requirements of each remote station, the length of the wire, the wire gauge, and the cable capacitance. In all instances, 2-conductor, shielded interconnecting cable should be used.

A. PORTABLE INSTALLATIONS: rubber-insulated and jacketed cable should be used due to its superior strength and durability. Belden 8413 miniature cable (24 ga. stranded conductors) is usable up to 500 feet. Belden 8412 (20 ga. stranded conductors) is usable up to 5,000 feet.

B. PERMANENT INSTALLATIONS: Vinyl-insulated and jacketed cable may be used; it costs less and is easier to pull through conduit than rubber insulated types. However, low capacitance cable must be used. Belden 8762 (20 ga. stranded conductors) is usable up to 500 feet. Belden 8760 (18 ga. stranded conductors) is usable up to 5,000 feet. NOTE: In systems where conduit is not used, and where equipment may not share a common ground, it may be necessary to run an additional ground wire to tie chassis together. This may be accomplished with Belden 8770 3-conductor shielded cable.

C. 2-CHANNEL PERMANENT INSTALLATIONS: Permanent systems can be wired in one of two ways. First, Channel A and Channel B may be routed to two distinct areas, for use by different people. Second, both channels may be routed together and brought to WP-2 wall plates so the user can select either channel A or B. The second method can be wired with two 2-conductor shielded cables or one multi-pair shielded cable.

Cables equivalent to the Belden types may be used, so long as their capacitance and wire gauge are comparable. Particularly in longer runs, it is desirable to use cable which has low resistance (large diameter conductors) and low inter-conductor capacitance.

2.3. LAYING OUT THE SYSTEM

2.3.1 PORTABLE INSTALLATIONS

Having determined the number and type of remote stations you wish to use, decide on a location for the main station. It should be near a source of 115V AC (power consumption is approximately 80 watts.) There are six parallel outputs available on the rear panel of the CS-100, and two sets of 3 parallel outputs on the CS-200. Any remote stations can be connected directly to the 6 outputs. Additionally, remote stations can be added by "daisy chaining" them to one another and/or by using the QP-100 Quadrapuss splitter. Cables should be routed away from heavy AC power sources, such as lighting panels, electric motors, etc.

2.3.2 PERMANENT INSTALLATIONS

The same general considerations apply here as for portable systems, as described in the preceding paragraph. Additionally, cables should be installed in accordance with approved local building codes. Class II wiring may be used. Connections to wall-plates or wall-mount remote stations are shown in the diagrams.

2.3.3 ISOLATED CHANNELS

The BA-1 In-Line Isolator can be installed anywhere in the system. For example, plug it into one output connector on the rear panel of the main station to create an entire isolated channel. Alternately, plug it into a remote station at the end of a cable run to isolate further remote stations while using a minimum of additional interconnect cable.

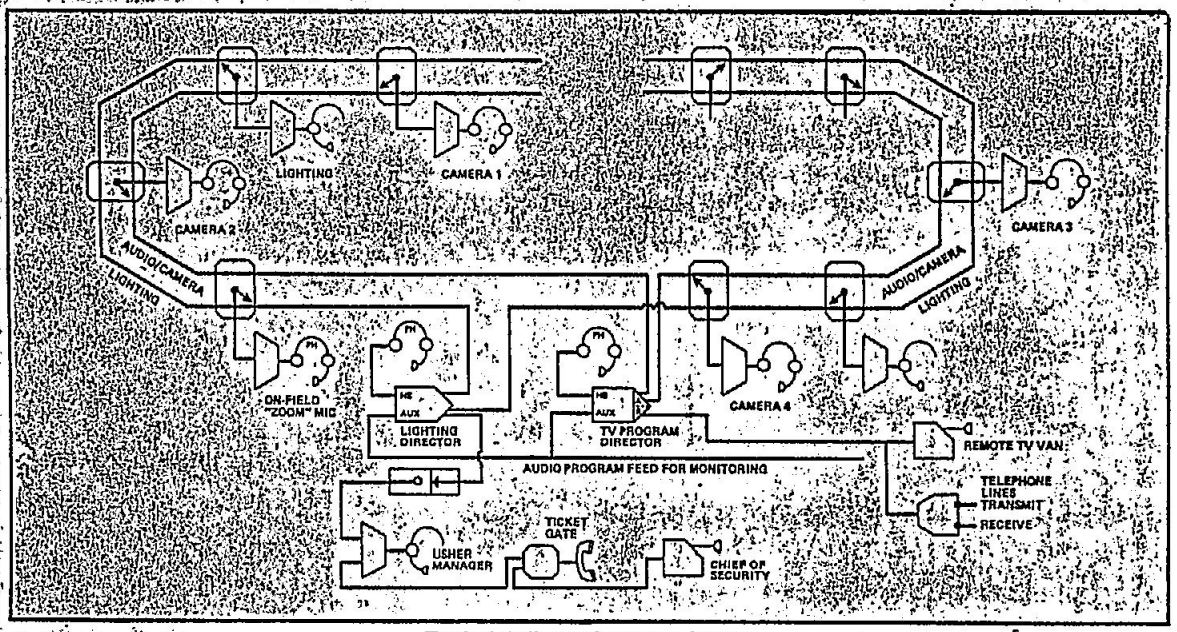

Typical Coliseum Intercom System

OPERATION OF THE SYSTEM

OPERATION OF THE CLEAR-COM SYSTEM IS QUITE SIMPLE, AS FOLLOWS:

1. CONNECT MAIN STATION to all remote stations with interconnecting cable. NOTE: Before connecting rear panel interconnecting cables, shut power off and hold call button depressed until call light(s) go out.

2. PLUG IN HEADPHONES at main station and remote stations into HEADSET CONNECTORS at front panel. (To locate connectors and controls, see Figure 1.) Headset connectors in main station are wired in parrallel. Use one or both.

3. SE T MASTER GAIN SET at rear panel of main station for overall system level to compensate for number of remote stations in system. (CS-200 has one gain control for each channel.) Under high noise conditions, turn master gain DOWN and speak with microphone very close to the mouth.

4. SET HEADSET VOLUME CONTROLS at main station and remote stations for individual volume level. Volume controls are located on front panel.

5. TO SIGNAL stations where headphones may have been removed, press CALL BUTTON on front panel and CALL LIGHT will go on. Call lights light up at all stations simultaneously.

6. THE AUXILIARY INPUT CONNECTOR on front panel of the main station provides for external program feeding into the entire system. (See schematics for connecting details). The AUXILIARY VOLUME CONTROL is located directly on top of the auxiliary input connector and controls the auxiliary input volume to the system.

7. THE CS-200 MAIN STATION can communicate with two separate channels, A and B. THE CHANNEL SELECT SWITCH which is located on the front panel of the main station, can be switched to positions A, B or A + B. The A or B position enables the main station to communicate with either channel A or B, respectively, while the A + B position enables the main station to communicate with both simultaneously. Regardless of the position of the switch, remote stations on channel A can always talk to other remote stations on A, but A cannot communicate with remote stations on channel B, and vice-versa. Also, note that the call lights are always operative from main station to both channels A and B, regardless of the switch position.

8. CAUTION:

   A) DO NOT allow belt packs to come into contact with other pieces of electrical equipment. An improper ground or short in a piece of electrical equipment touching a Clear-Com remote station can cause a hum or a buzz in the system. When connecting remote stations to electrical equipment, make sure the equipment is properly grounded.

   B) DO NOT wear the remote stations in wet weather without ensuring that the station is properly grounded.

PS-3000 INTERCOM POWER SUPPLY

DESCRIPTION

The PS-3000 is a regulated intercom power unit designed to power all Clear-Com remote stations. Typically, it can be installed in areas not requiring a headset function, i.e., isolated rack bays.

The PS-3000 su-plies 30v at 2 amps and is capable of supporting a minimum of 40 Clear-Com remote stations. It is protected against shorts in the cable by current foldback in the regulator circuit and provides visual indication of such conditions on the front panel system. The unit has provisions for an auxillary program input to the intercom system with the level adjustable from the front panel.

INSTALLATION AND OPERATION

The PS-3000 can be mounted in a standard 19" rack. Because the PS-3000 can dissipate a considerable amount of heat, it is recommended that at least an inch of space be allowed above the unit to facilitate ventilation.

All interconnections to the unit are made from the rear panel. Four parallel D3M connectors are provided for system output. As in any Clear-Com system, the lines to the remote stations may be "home-runs" or the stations may be "daisy chained." Once the system has been set up, the overall level may be adjusted with system level control.

If, at any time, short circuit conditions are encountered, the problem can usually be isolated by removing the interconnect cables from the unit, one at a time, until the short circuit indicator goes out. It may be necessary to shut the unit off for a few seconds to reset the short circuit indicator.

An internal 1-1/2 amp slow-blow fuse protects the PS-3000 in case of internal power supply failure. If the fuse repeatedly blows, it means the power transistor or a component on the p.c. board has failed. The cover is held on by "snap on" fasteners. To remove - pull cover up hard.

TROUBLE SHOOTING

	SYMPTOM	CAUSE	REMEDY
1)	System is totally dead, power switch light doesn't come on.	Circuit breaker open. A.C. power failure.	Reset circuit breaker. Check A.C. pow line.
2)	Circuit breaker trips repeatedly or short circuit LED remains lit (PS-3000 only).	Shorted or mis-wired interconnect cable. Defective remote unit.	Remove cables from main station one at a time until faulty line is isolate Check for shorts between pins 1 and 2
3)	Oscillation	Feedback caused by unused headset left with mic on and volume turned up.	Turn off mics on all unused headsets.
4)	Call light doesn't work.	Bulb burned out.	Unscrew lens from lamp holder. Replace lamp with GE 327.
5)	Individual Remote Station malfunction.	Faulty remote station, headset or cable.	Replace suspect unit with known good unit. Defective remote stations or headsets should be returned to factory for service. There are no user servicable parts in these units.
6)	Hum or Buzz in system.	Inductive pickup caused by close proximity of main or remote station to power lines or transformers.	Relocate offending unit.
		Ground loop caused by improper grounding of system (See installation instructions)	Reverse power cord. Lift ground.
		10-ohm chassis ground resistor (R1 CS-200) in main station open. (Note: This is caused by the system ground coming in contact with something that is "hot" with respect to main station earth ground. Should this occur, a careful check of the system ground and A.C. distribution in your location is recommended.)	Open main station by removing 2 scre in handle and unscrewing 4 feet. Sl off cover and check 10 ohm resistor the bridge rectifier terminal strip. If open, replace

SYSTEM INTERCONNECTION DIAGRAM

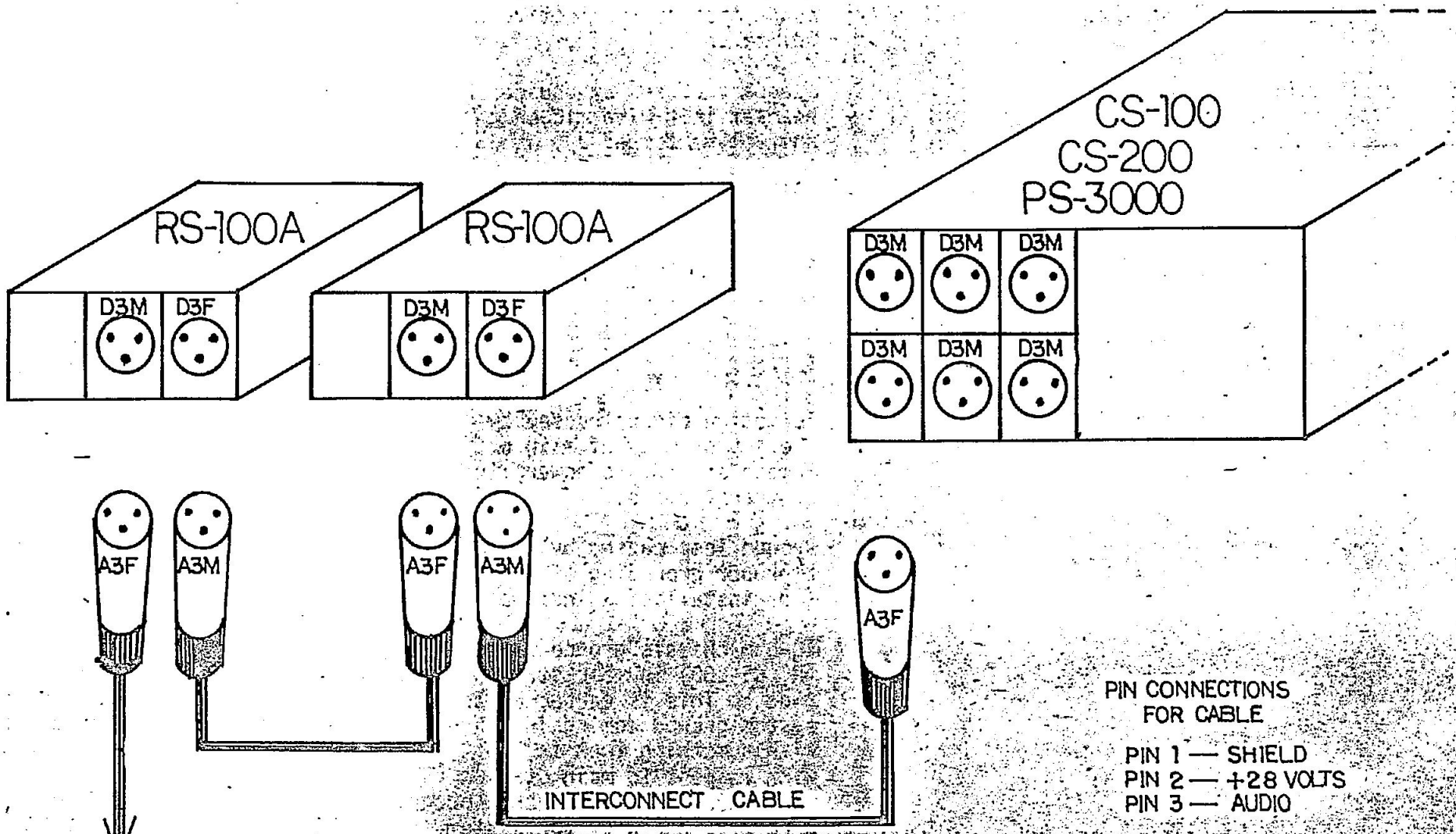

PIN CONNECTIONS FOR CABLE

PIN 1 — SHIELD
PIN 2 — +28 VOLTS
PIN 3 — AUDIO

CS-100/CS-100K MAIN STATION (FRONT PANEL)

FIGURE 3

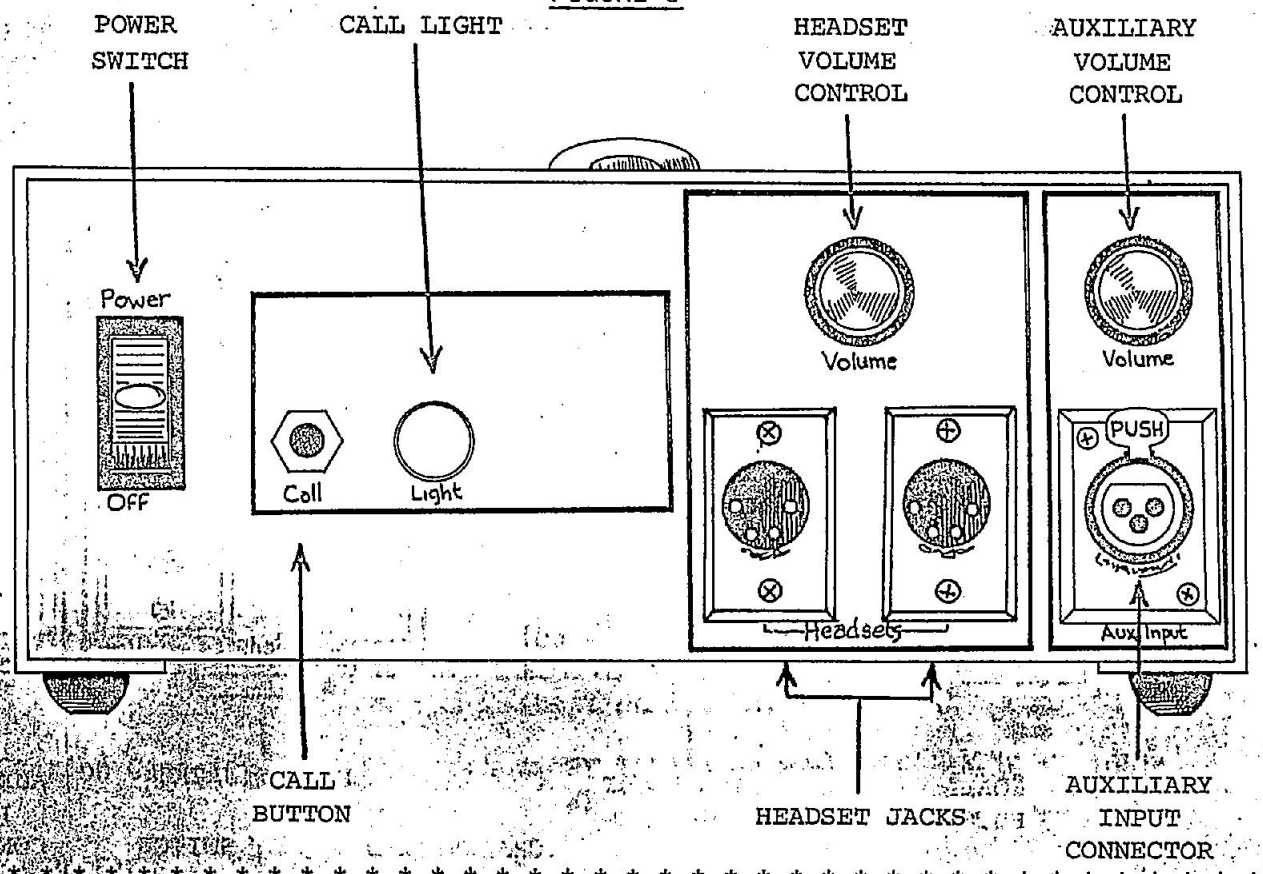

CS-100/CS-100K MAIN STATION (BACK PANEL)

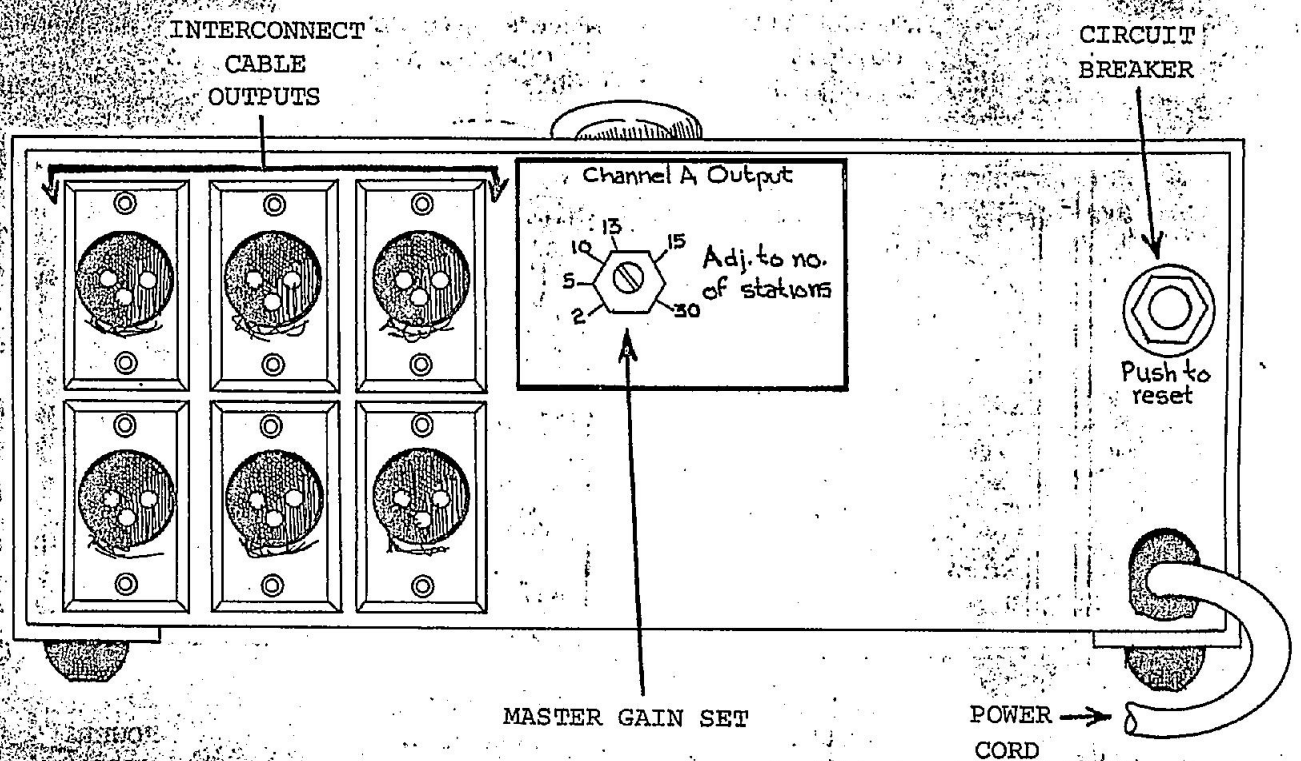

FIGURE 4

CS-200/CS-200K MAIN STATION (FRONT PANEL)

FIGURE 1

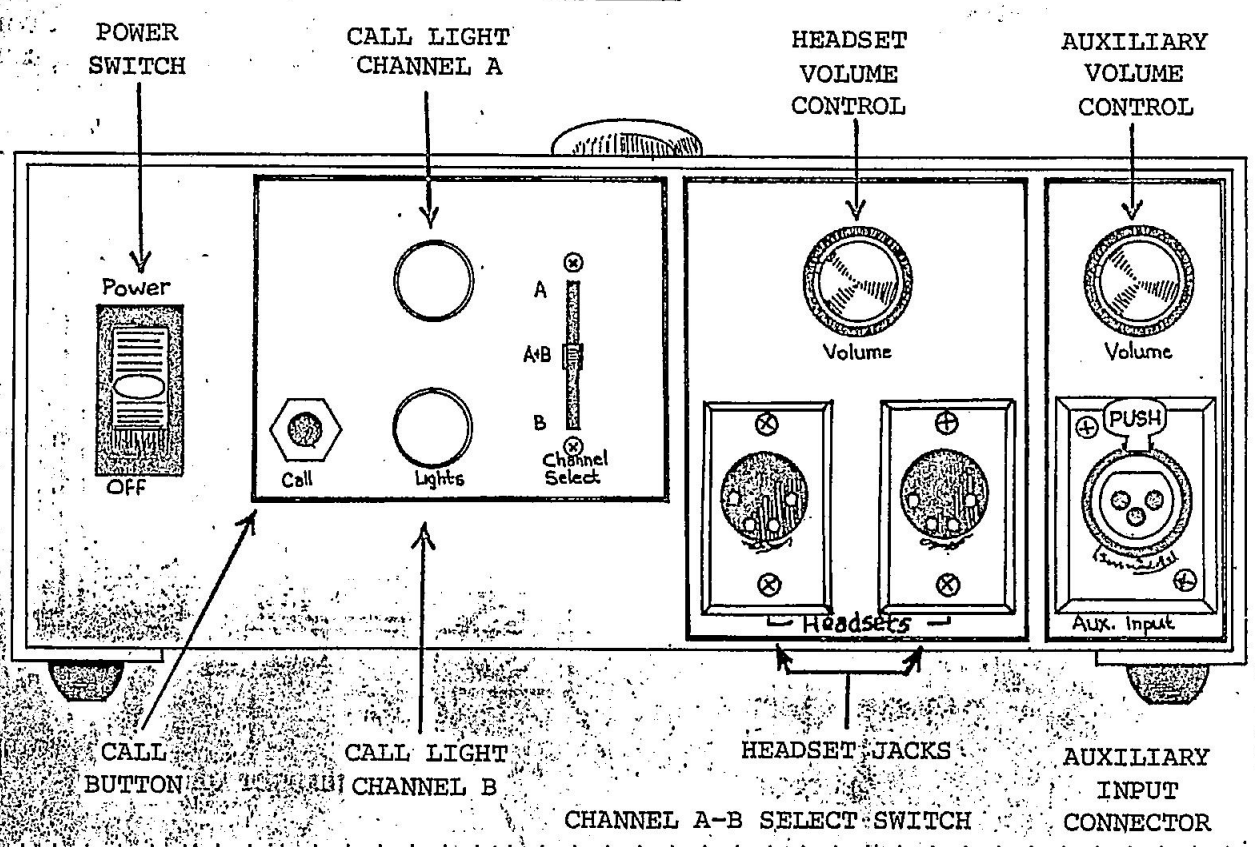

CS-200/CS-200K MAIN STATION (BACK PANEL)

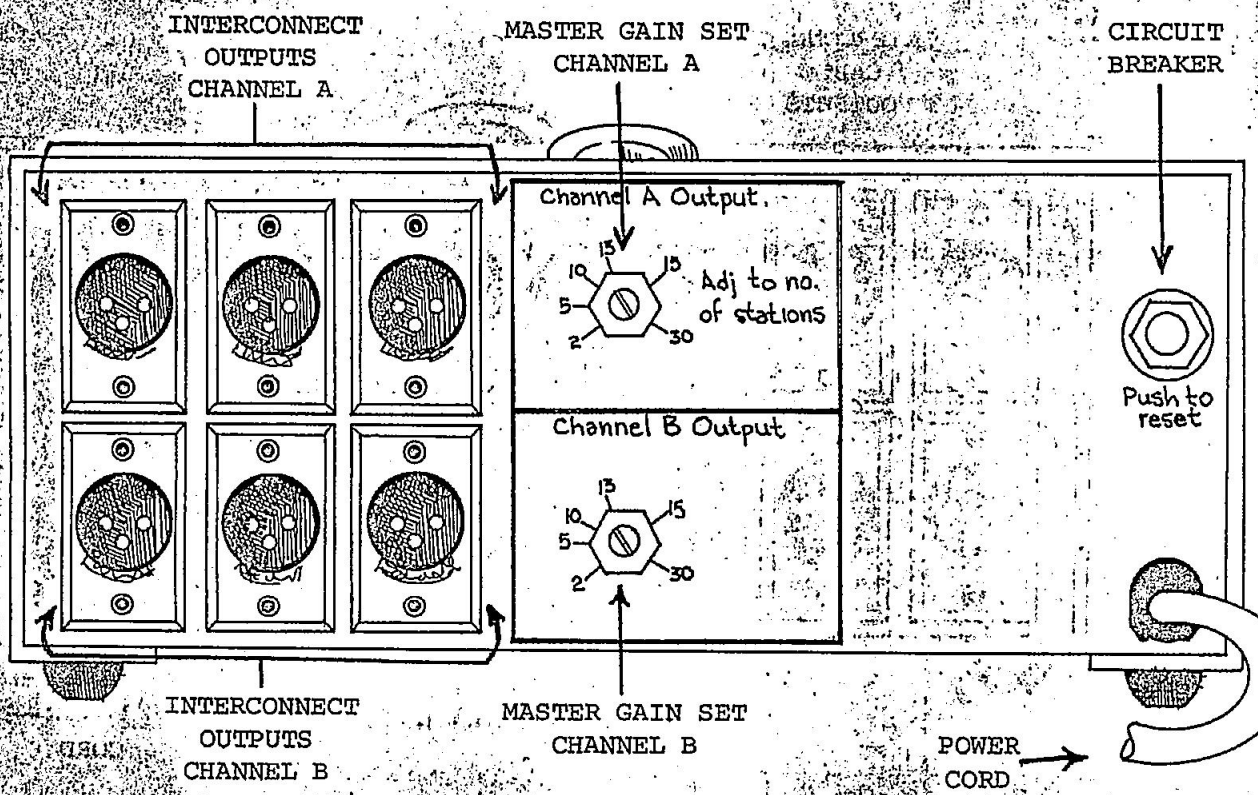

FIGURE 2

SPECIFICATIONS

PS-3000 INTERCOM POWER SUPPLY

Output Voltage:	28 VDC
Output Current:	2A before foldback
Load Regulation:	± 1 volt from 0 - 2A output current
Line Regulation:	± 20mV from 105 - 125 VAC input voltage
Ripple:	<1mV
Protection Circuitry:	Short circuit protected with current foldback (LED indicator) and an internal crowbar circuit to protect remote stations in case of power supply failure.
Power Requirements:	105 - 125 VAC or 210 - 250 VAC, 50 - 60Hz 1.5A internal fuse. Maximum power consumption 110 VA.
Remote Station Capacity:	40 RS-100A's or MR-102's, or 15 KB-100's or KB-111's.

PROGRAM AMPLIFIER

Frequency Response:	150 - 18kHz
Input Impedance:	47,000 ohms
Input Level:	+2dB for maximum output, -15dB nominal
System Impedance:	200 ohms nominal; 570 ohms maximum with two (2) stations; 90 ohms maximum with thirty (30) stations (6dB drop in level).
Signal Level:	-15dB nominal; 0dB before clipping
Auxiliary Input Connector:	1 D3F (3-pin female)
Output Connectors:	4 D3M's (3-pin male) in parallel
Environmental Temperature Range:	0^0 - 50^0 C. (32^0 - 122^0 F)
Dimensions:	19" X 3.5" X 4" deep. Standard rack mounting.
Weight:	6 lbs.

PS-3000 PARTS LIST

ITEM	PART #	DESCRIPTION	REF. DES.	QTY.
1	4805	Diode, 3A 1N5401	D1,2,3,4,10	5
2	4809	Diode, Zener 18V 1N5248B	D5,6	2
3	4830	Diode, Zener 30V 1N5256B	D7	1
4	4826	Diode, Zener 6.8V 1N957	D9	1
5	4825	SCR, 5A S4006L	SCR1	1
6	4836	Trans, MPS-U03 Motorola	Q1	1
7	4835	Trans, 2N3716	Q2	1
8	4807	Trans,2N2907	Q3	1
9	4820	SC723J Voltage Reg.	IC1	1
10	4818	LM741 Op-Amp	IC2	2
11	2102	D3F Connector	J1	1
12	2103	D3M Connectors	J2 - J5	4
13	4701	250K Pot 3/8" Bushing	P1	1
14	4702	1K Pot 1/4" Bushing	P2	1
15	5204	Fuse, 3AG 1.5 Amp		1
16	7110	PC Module		1
17	5102	Power Switch	S2	1
18	5604	Power Transformer	T1	1
19	2401	Knob, Black		1

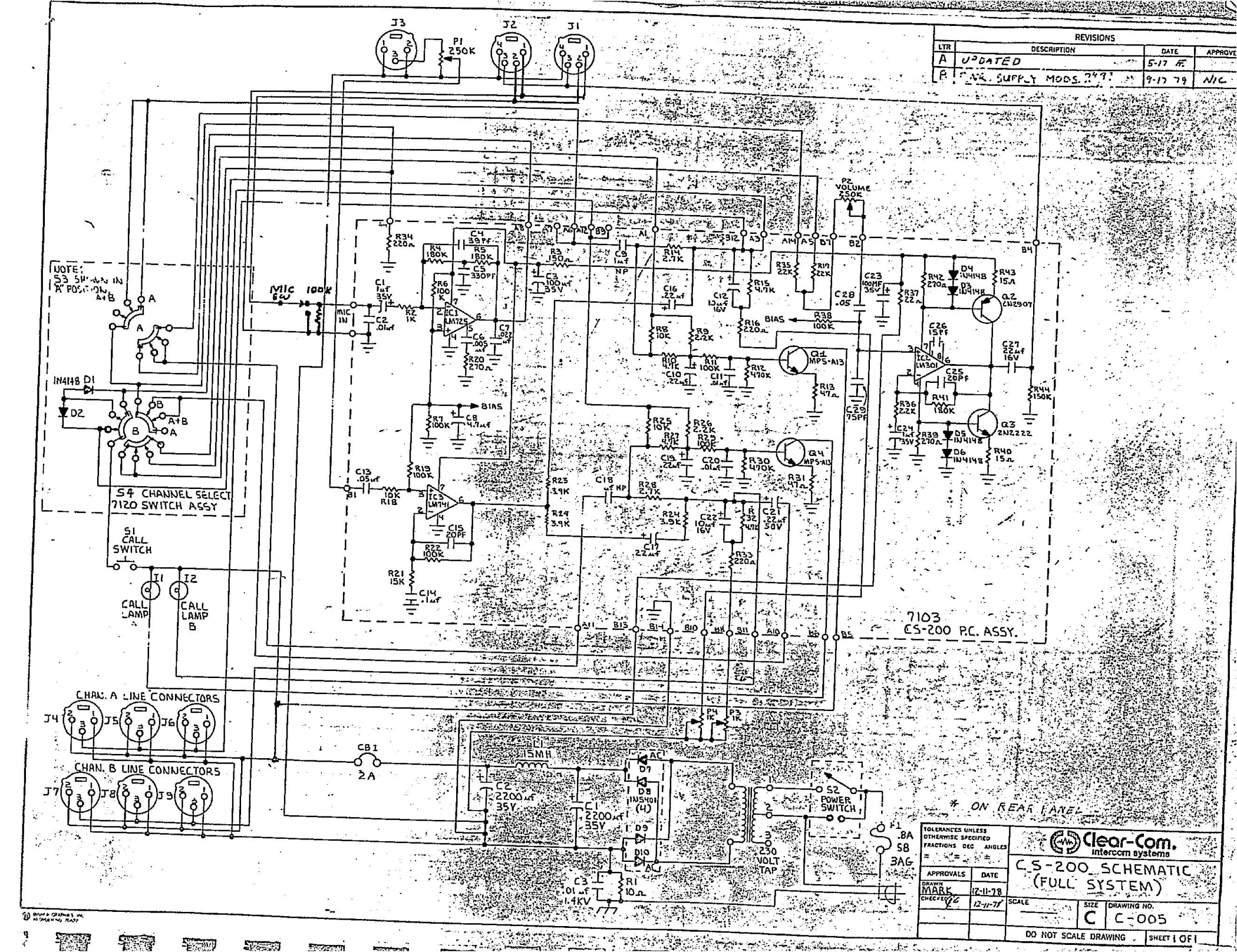
REVISIONS
LTR | DESCRIPTION | DATE | APPROVE
A | UPDATED | 5-17 |
B | SUPPLY MODS. | 9-17 79 | NIC
J3
J2
J1
P1 250K
P2 VOLUME 250K
NOTE: S3 SHOWN IN "A" POSITION
S4 CHANNEL SELECT 7120 SWITCH ASSY
S1 CALL SWITCH
CALL LAMP A
CALL LAMP B
MIC SW
MIC IN
100K
IC1 LM725
IC2 LM301
IC3 LM741
Q1 MPS-A13
Q2 2N2907
Q3 2N2222
Q4 MPS-A13
BIAS
7103 CS-200 P.C. ASSY.
CHAN. A LINE CONNECTORS
CHAN. B LINE CONNECTORS
CB1 2A
L1 15MH
C2 2200µf 35V
C1 2200µf 35V
D7
D8 1N5401 (4)
D9
D10
S2 POWER SWITCH
230 VOLT TAP
F1 .8A SB 3AG
* ON REAR PANEL
TOLERANCES UNLESS OTHERWISE SPECIFIED
FRACTIONS DEC ANGLES
APPROVALS | DATE
DRAWN MARK | 12-11-78
CHECKED | 12-11-78
Clear-Com. intercom systems
CS-200 SCHEMATIC (FULL SYSTEM)
SCALE
SIZE C
DRAWING NO. C-005
DO NOT SCALE DRAWING
SHEET 1 OF 1

LTR	DESCRIPTION	DATE	APPROVED
B	REVISED	6-7-79	
C	PWR. SUPPLY MODS	9-17-79	NIC

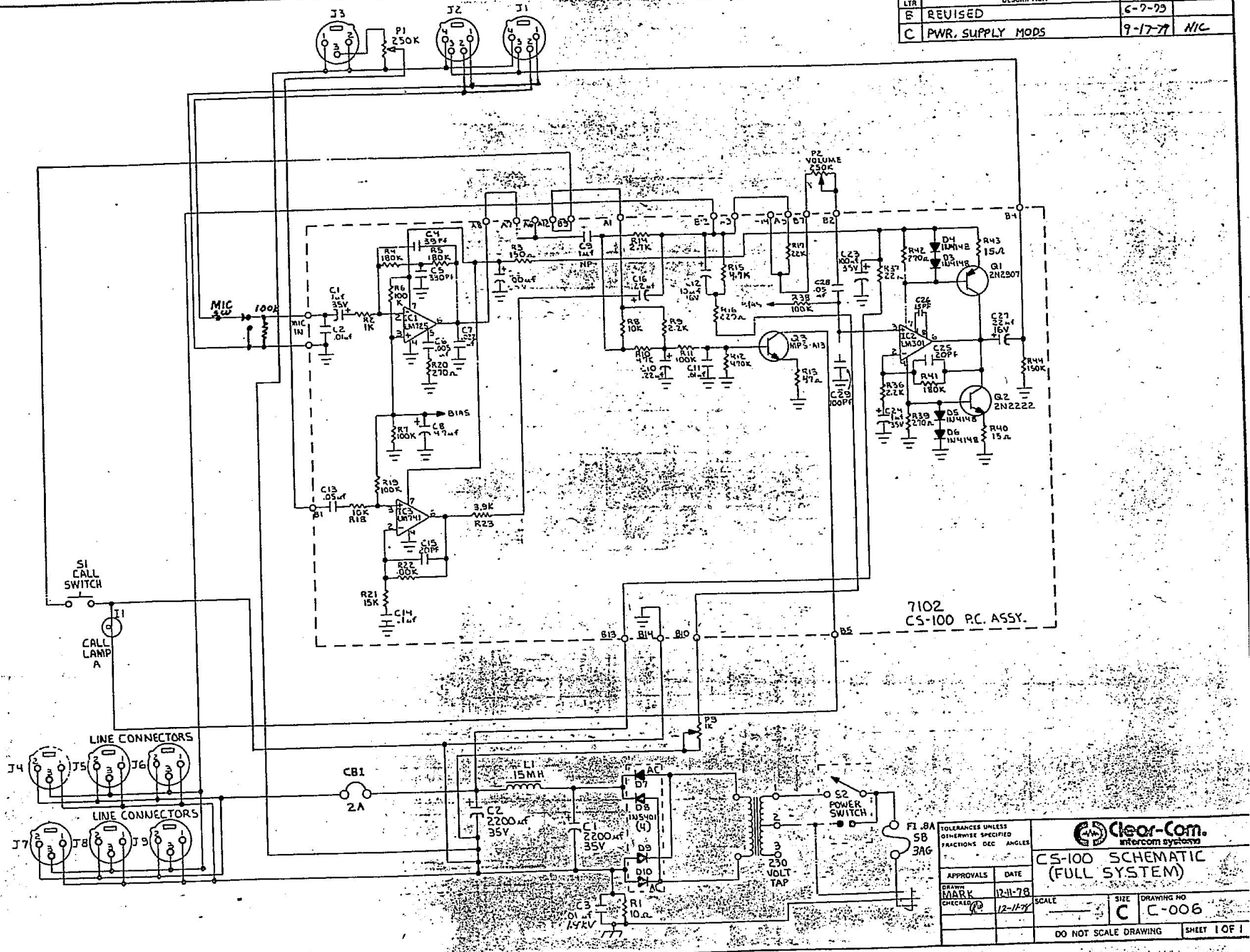

TOLERANCES UNLESS OTHERWISE SPECIFIED
FRACTIONS DEC ANGLES

APPROVALS	DATE
DRAWN MARK	12-11-78
CHECKED	12-11-78

Clear-Com. intercom systems

CS-100 SCHEMATIC (FULL SYSTEM)

SCALE — SIZE C DRAWING NO C-006

DO NOT SCALE DRAWING SHEET 1 OF 1

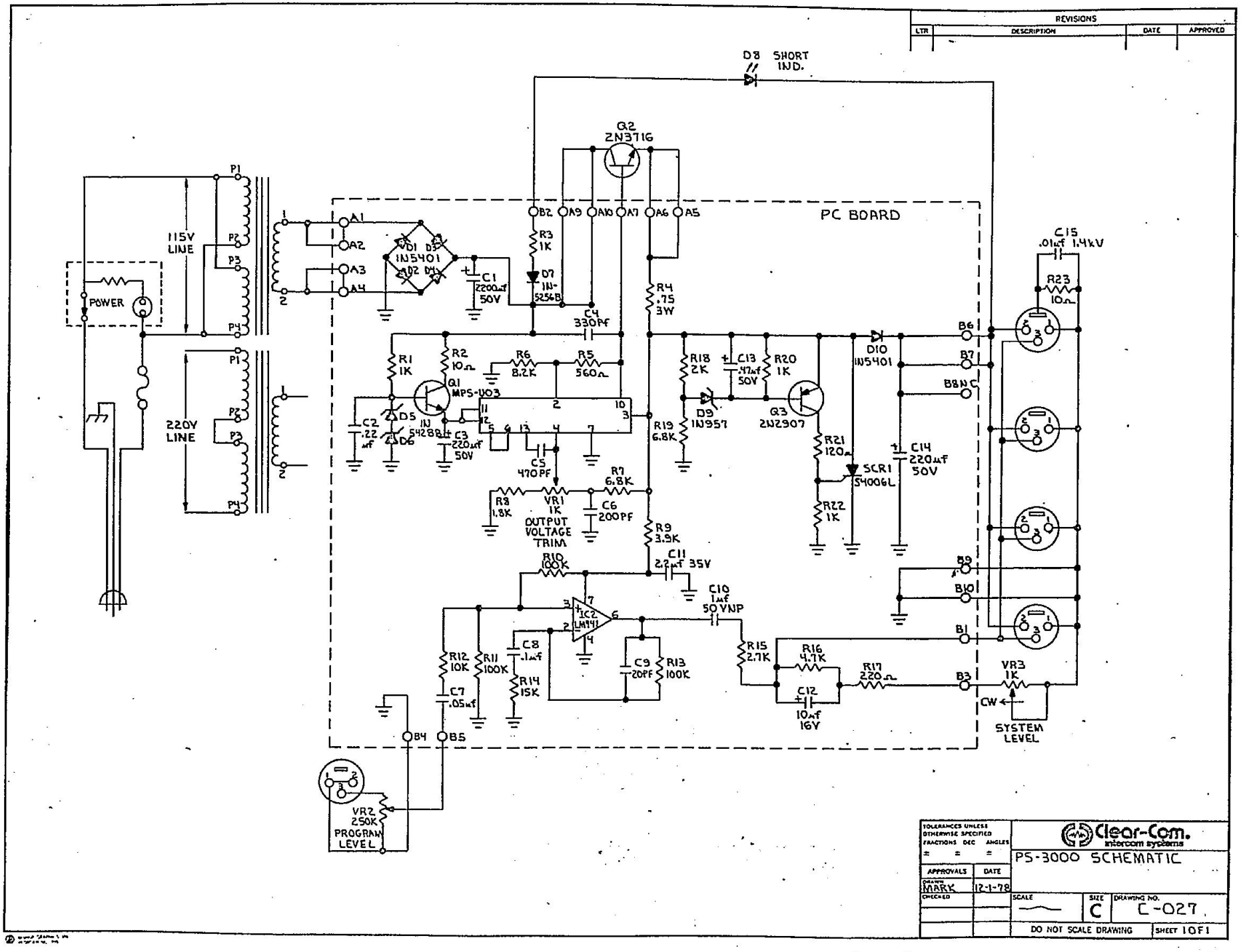
REVISIONS
LTR
DESCRIPTION
DATE
APPROVED
D8 SHORT IND.
Q2 2N3716
PC BOARD
115V LINE
220V LINE
POWER
D1 D2 D3 D4 1N5401
C1 2200µf 50V
R3 1K
D7 1N-5256B
C4 330PF
R4 .75 3W
R1 1K
R2 10Ω
R6 8.2K
R5 560Ω
Q1 MPS-U03
D5 1N 5428B
D6
C2 .22 µf
C3 220µf 50V
C5 470PF
R7 6.8K
R8 1.8K
VR1 1K OUTPUT VOLTAGE TRIM
C6 200PF
R9 3.9K
R10 100K
C11 2.2µf 35V
IC2 LM741
C10 1µf 50 VNP
R12 10K
R11 100K
C8 .1µf
R14 15K
C7 .05µf
C9 20PF
R13 100K
R15 2.7K
R16 4.7K
C12 10µf 16V
R17 220Ω
VR3 1K
CW
SYSTEM LEVEL
VR2 250K PROGRAM LEVEL
R18 2K
C13 .47µf 50V
R20 1K
D9 1N957
Q3 2N2907
R21 120Ω
R22 1K
SCR1 S4006L
C14 220µf 50V
D10 1N5401
C15 .01µf 1.4kV
R23 10Ω
A1
A2
A3
A4
A5
A6
A7
A8
A9
A10
B1
B2
B3
B4
B5
B6
B7
B8
B9
B10
TOLERANCES UNLESS OTHERWISE SPECIFIED
FRACTIONS DEC ANGLES
APPROVALS
DATE
DRAWN MARK
CHECKED
12-1-78
Clear-Com. intercom systems
PS-3000 SCHEMATIC
SCALE
SIZE C
DRAWING NO. C-027
DO NOT SCALE DRAWING
SHEET 1 OF 1

REVISIONS			
LTR	DESCRIPTION	DATE	APPROVED
A	RELEASE	12/7/79	

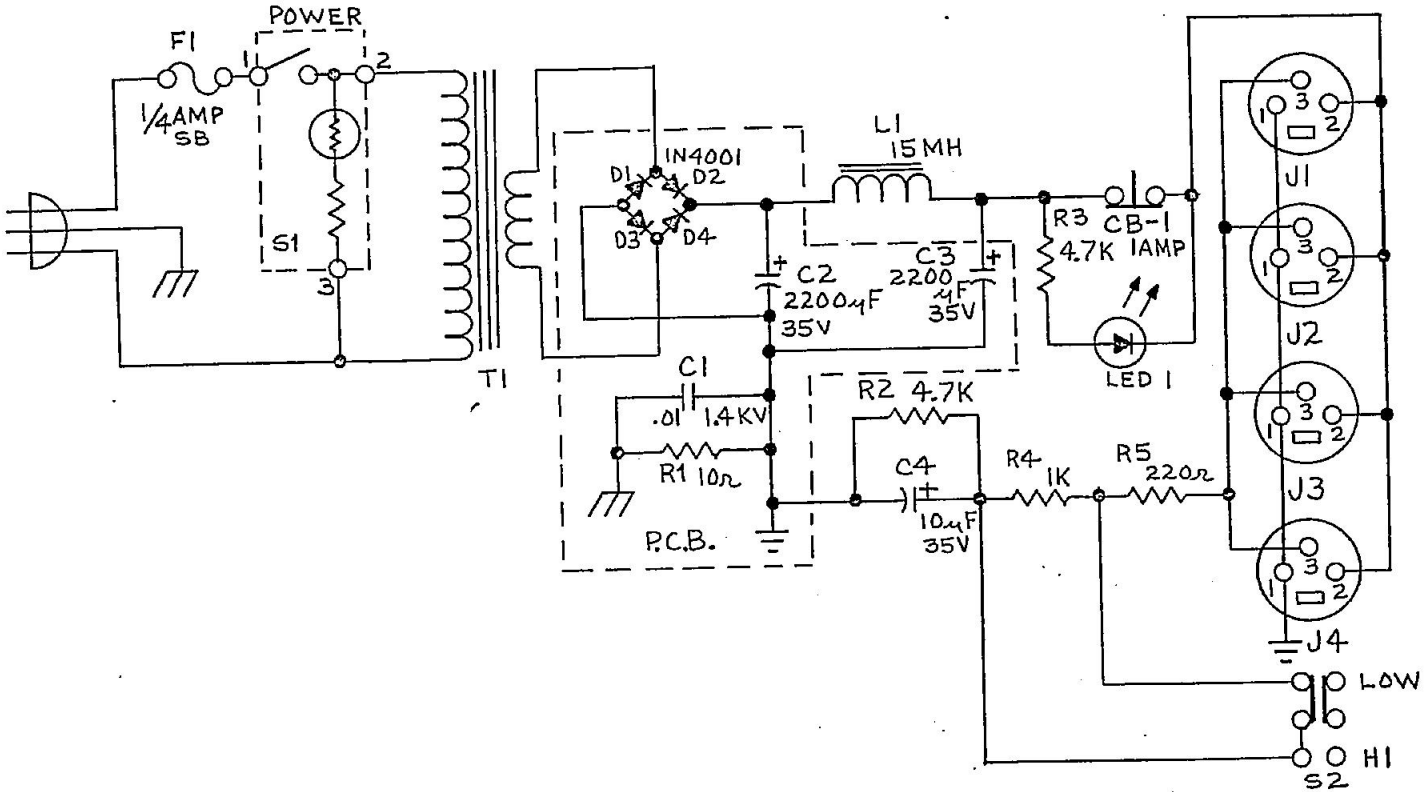

TOLERANCES UNLESS OTHERWISE SPECIFIED		
FRACTIONS	DEC.	ANGLES
±	±	±

APPROVALS	DATE
DRAWN L. Miller	12/7/79
CHECKED CB	12/7/79

SCHEMATIC
PS-10. POWER SUPPLY

SCALE	SIZE	DRAWING NO.
NONE	B	SCD-B-352

DO NOT SCALE DRAWING — SHEET 1 OF 1

BISHOP GRAPHICS, INC
REORDER NO 20521

CS-100/CS-200 PARTS LIST

ITEM	PART #	DESCRIPTION	REF. DES.	CS-100 QTY.	CS-200 QTY.
1	1800	Choke, Filter	L1	1	1
2	4805	Diode, 3A 1N5401	D7,8,9,10	4	4
3	1523	2000 mfd 35V	C1, C2	2	2
4	1529	.01 mf/1.4kV Capacitor	C3	3	3
5	5202	.5 Amp Circuit Breaker	CB1	1	1
6	3900	Call Light Assembly	I1, I2	1	2
7	3901	#327 Lamp, 28V.		1	2
8	2113	D4M Connectors	J1, J2	2	2
9	2102	D3F Connector	J3	1	1
10	2103	D3M Connectors	J4 - J9	6	6
11	4701	250K Pot 3/8" Bushing	P1, P2	2	2
12	4702	1K Pot 1/4" Bushing	P3, P4	1	2
13	7103	Amplifier Module	PC1	0	1
14	7102	Amplifier Module	PC1	1	0
15	4102	10 ohm 1/4w Resistor	R1	1	1
16	5100	Push Button	S1	1	1
17	5102	Power Switch	S2	1	1
18	5602	Power Transformer	T1	1	1
19	6000	Power Cord		1	1
20	7120	3 Position Lever Switch/ Plug Assembly	S3	0	1
21	2401	Knob		1	1
22	2402	Feet		4	4

SPECIFICATIONS

CS-100/CS-200 MAIN STATION

AMPLIFIER:	Solid State IC plug in printed circuit amplifier module including signalling circuit. Current limited and short circuit protected.
FREQUENCY RESPONSE:	250 Hz - 10 KHz (-3 dB ref. to 1 KHz) with a rising response to enhance voice intelligibility.
HEADSET MICROPHONE INPUT LEVEL:	-55 dBm.
HEADPHONE OUTPUT LEVEL:	9 volts rms into 600 Ω maximum. (-20dBm)
DISTORTION:	Less than 0.5%.
SYSTEM IMPEDANCE AND LEVEL:	Approximately -25 dBm into 200 (Level dependent on master gain control settings)
AUXILIARY INPUT AUDIO LEVEL:	100 mv into 600 Ω minimum.
CHANNEL SEPARATION (CS-200):	$\geq$ 45 dB.
HEADSET INPUT CONNECTOR:	2 - 4 pin connectors (D4M)
INTERCONNECT OUTPUT CONNECTORS:	
CS-100:	6 each in parallel, Switchcraft D3M.
CS-200: Channel A:	3 each in parallel, Switchcraft D3M.
Channel B:	3 each in parallel, Switchcraft D3M.
AUXILIARY INPUT CONNECTOR:	Switchcraft D3M.
POWER SUPPLY:	28 volts circuit breaker protected.
CAPACITY:	Will support up to 40 RS-100A or MR-102 remote stations or 15 KB-100 or KB-111 remote stations.
POWER REQUIREMENTS:	115/230 volts 50-60 Hz. 80 watts maximum.
DIMENSIONS:	
CS-100/CS-200:	9.5"L X 4"H X 8.5"D.
CS-100K/CS-200K:	19"L X 3.5"H X 9.125"D.
WEIGHT:	
CS-100/CS-200:	6 lbs. 14 oz.
CS-100K/CS-200K:	6 lbs. 15.oz.

PS-10 Power Supply

PRELIMINARY DATA

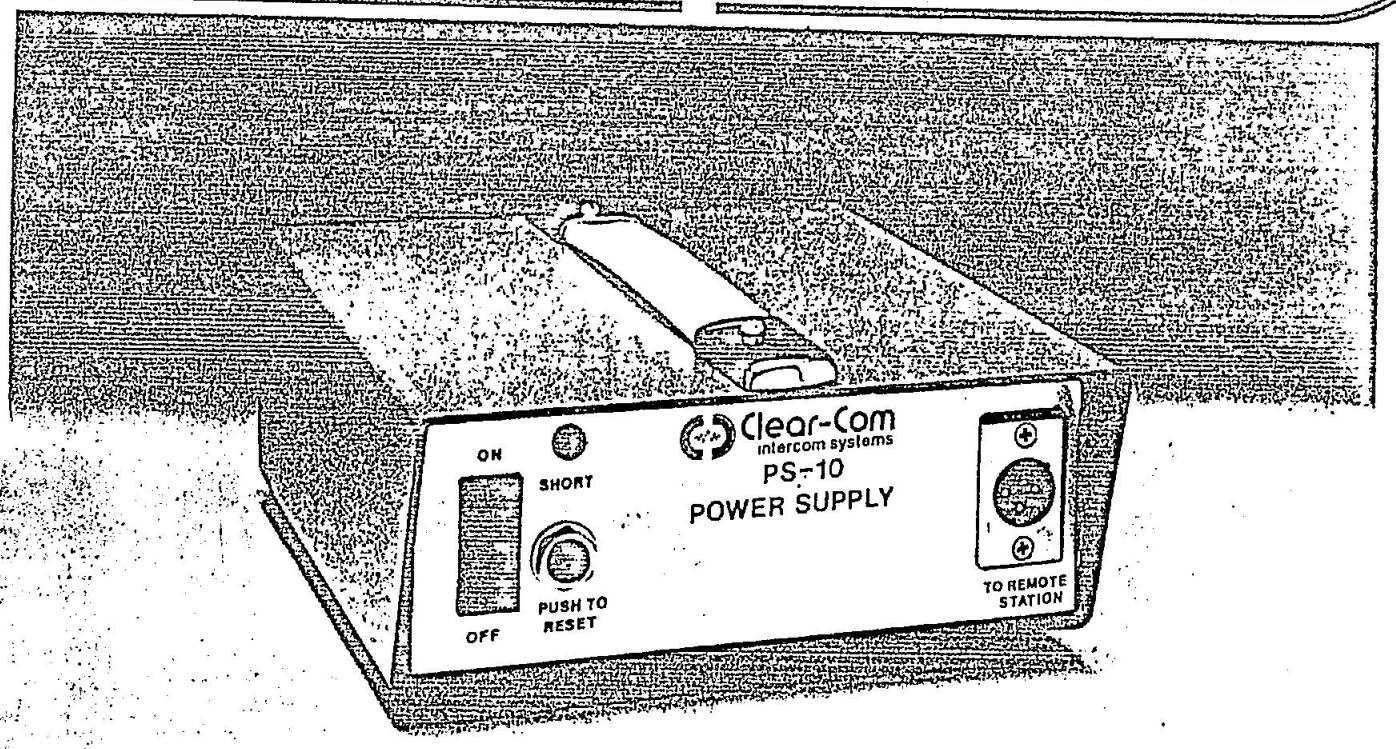

FEATURES

Powers all existing Clear-Com.
12 remote station capacity.
Front panel remote connection.
L.E.D. short circuit indicator.
Circuit breaker protection.
Four remote station outputs.
Master gain switch.
Heavy duty construction.
Portable or 3 1/2" rack mount.

SPECIFICATIONS

Audio Line Impedence: 200 ohms nominal.
Power Supply Output: 28 Volts DC @ 1 amp.
Power Requirements: 115/230 volts AC.
50/60 Hz. 40 VA max.
Dimensions: 7 1/4" x 6 3/4" x 3 3/8"
(185 x 172 x 86 mm)
Weight: 4 Lb's. 8 oz. (2 Kg.)

DESCRIPTION

The Clear-Com PS-10 power supply provides a low-cost approach to powering a small intercom system. Compatible with all Clear-Com products, the PS-10 powers up to 12 remote stations. Master Gain switch allows user to adjust system volume for high or low noise conditions. Four output connectors provide flexibility in system set-up. A convenient front panel mounted connector is provided for the Director or Stage Manager. The PS-10 is circuit-breaker protected from damage due to faulty cables. Short circuits are indicated by an illuminated L.E.D. Constructed of heavy gauge aluminium, the PS-10 is offered in either portable or rack-mount versions.

Clear-Com® intercom systems

759 Harrison Street · San Francisco, California 94107 · (415) 989-1130

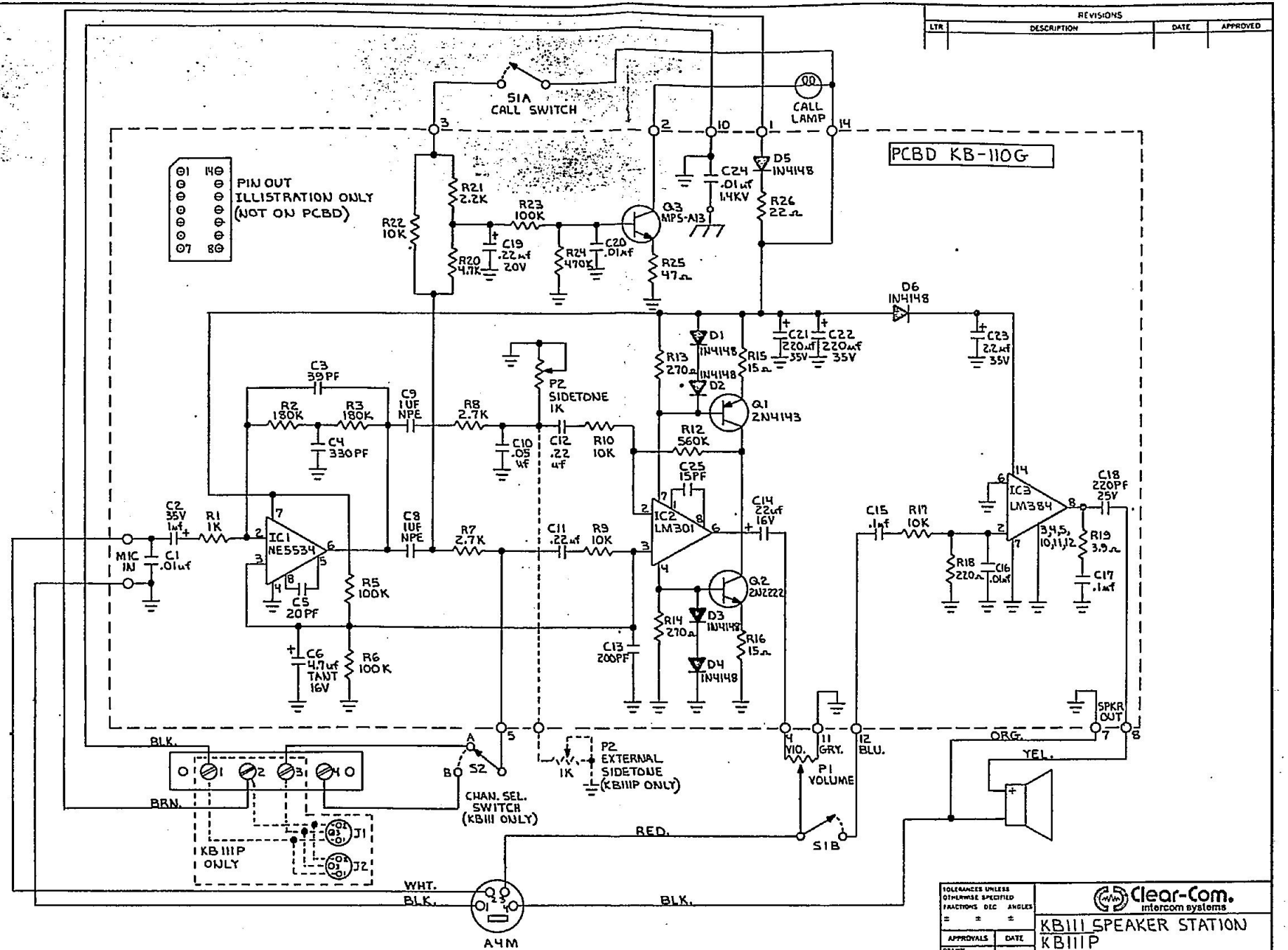
REVISIONS
LTR
DESCRIPTION
DATE
APPROVED
PCBD KB-110G
S1A
CALL SWITCH
CALL LAMP
PIN OUT
ILLISTRATION ONLY
(NOT ON PCBD)
R21 2.2K
R22 10K
R23 100K
R20 4.7K
C19 .22uf 20V
R24 470K
C20 .01uf
Q3 MPS-A13
R25 47Ω
C24 .01uf 1.4KV
D5 IN4148
R26 22Ω
D6 IN4148
C23 2.2uf 35V
C21 220uf 35V
C22 220uf 35V
D1 IN4148
D2 IN4148
R13 270Ω
R15 15Ω
Q1 2N4143
R12 560K
C3 39PF
R2 180K
R3 180K
C4 330PF
C9 1UF NPE
R8 2.7K
C10 .05 uf
P2 SIDETONE 1K
C12 .22 uf
R10 10K
C25 15PF
C2 35V 1uf
R1 1K
MIC IN
C1 .01uf
IC1 NE5534
C5 20PF
C8 1UF NPE
R7 2.7K
C11 .22uf
R9 10K
IC2 LM301
C14 22uf 16V
R5 100K
C6 4.7uf TANT 16V
R6 100K
C13 200PF
R14 270Ω
R16 15Ω
D3 IN4148
D4 IN4148
Q2 2N2222
C15 .1uf
R17 10K
IC3 LM384
C18 220PF 25V
R18 220Ω
C16 .01uf
R19 3.9Ω
C17 .1uf
3,4,5, 10,11,12
SPKR OUT
BLK.
BRN.
S2
CHAN. SEL. SWITCH (KB111 ONLY)
P2 EXTERNAL SIDETONE (KB111P ONLY)
1K
VIO.
GRY.
BLU.
P1 VOLUME
ORG.
YEL.
RED.
S1B
KB 111P ONLY
J1
J2
WHT.
BLK.
BLK.
A4M
TOLERANCES UNLESS OTHERWISE SPECIFIED
FRACTIONS DEC ANGLES
APPROVALS
DATE
DRAWN MARK 11-21-78
CHECKED
Clear-Com. intercom systems
KB111 SPEAKER STATION
KB111P
SCALE
SIZE C
DRAWING NO. C-004
DO NOT SCALE DRAWING
SHEET 1 OF 1

CLEAR-COM KB-111, KB-111P

PARTS LIST

Reference Des.	Clear-Com Part #	Description	KB-111	KB-111P
	#2513	Enclosure	X	
	#2520	Blue Enclosure		X
	#2403	Handle		X
	#2404	Feet (Cork)		X
P2	#4702	Side Tone Pot		X
S1	#5103	Paddle Switch	X	X
	#3903	Lamp	X	X
P1	#4704	Volume Control	X	X
	#2401	Knob	X	X
SP1	#5000	Speaker	X	X
	#7112	PC Module	X	
	#7107	PC Module		X
S2	#5106	A-B Ch. Select Switch	X	

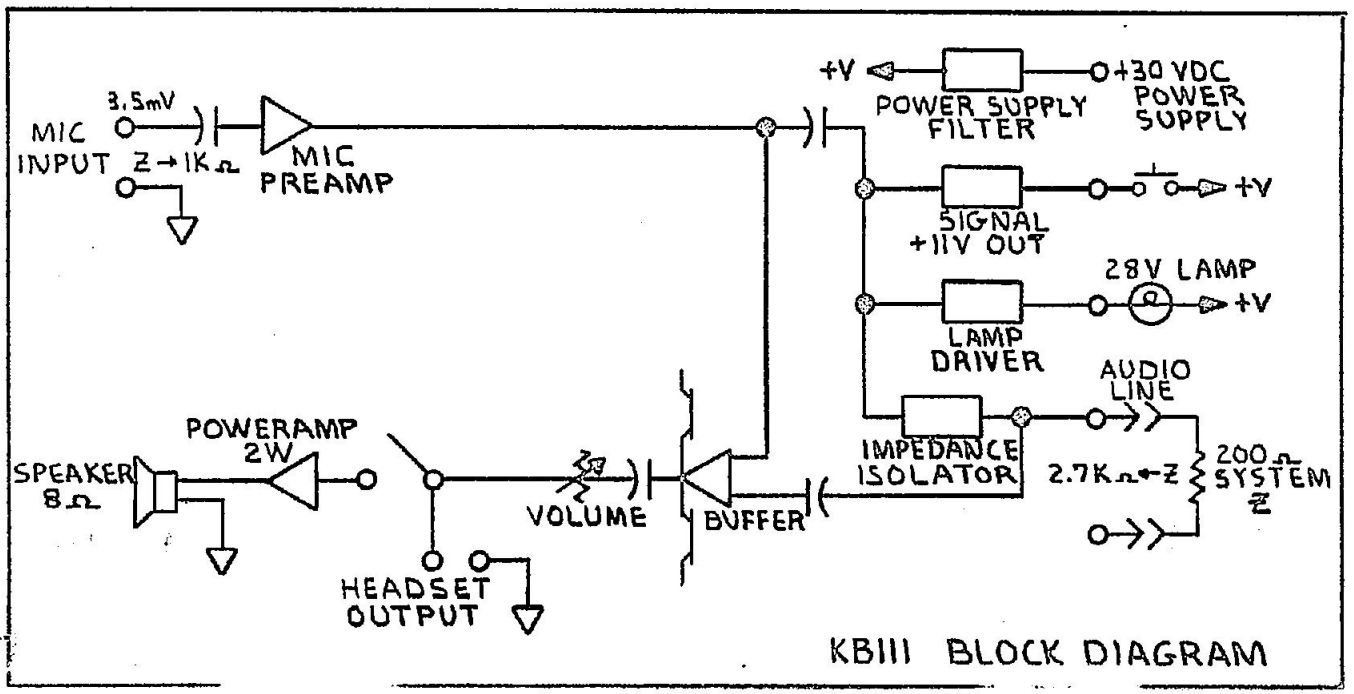

KB-111, KB-111P, KB-111K SPECIFICATIONS

AMPLIFIER DESIGN

Solid state, integrated circuit amplifiers which include a mic preamp, headset power amp and signalling circuitry. Current limited with short circuit and reverse polarity protection.

MIC PREAMPLIFIER

Frequency Response:	200-12kHz with contoured response to enhance voice intelligibility.
Mic Input:	200 ohms
Mic Preamp Gain:	32dB
Max Input Before Clipping:	-22dB

HEADPHONE AMPLIFIER

Frequency Response:	150-18kHz ±2dB
Output Impedance:	150-600 ohms
Amp Output:	20dBm, 26 volts p-p at 600 ohms
Distortion:	0.5% THD at 1kHz
Headphone Amp Gain:	38dB

SPEAKER AMPLIFIER

Output Impedance:	8-50 ohms
Power Output:	4 watts into 8 ohms
Frequency Response:	250-10kHz ±3dB

GENERAL

Signalling Voltage:	11 volts DC on audio line
Call Light Sensitivity:	4 volts
Signal-to-Noise:	75dB
Volume Control Range:	15dB
Line Impedance:	2.7k ohms bridging
Side Tone Adjustment:	25dB min.
Power Requirements:	20 ma quiescent, 60 ma average talk, 60 ma signalling, 200 ma short circuit.
Voltage Range:	18-30 volts, 28 volts nominal.
Dimensions:	6.75" X 4.5" X 2.5" Deep (KB-111). 8" X 5.3" X 2.5" Deep (KB-111P). 3.5" X 19" X 3.5" Deep (KB-111K).
Weight:	2 lbs. 12 oz. (KB-111) 3 lbs. 12 oz. (KB-111P) 3 lbs. 4 oz. (KB-111K)

CLEAR-COM INSTRUCTION SHEET
KB-111 KB-111P

The Clear-Com KB-111 is a 2-channel wall-mounted intercom station. (The KB-111P is single channel). Mounted on the stainless steel panel is a 4" weatherproof speaker, amplifier module, and signalling circuit. The KB-111 is designed for permanent installation. A steel mounting enclosure is included. (The KB-111P is mounted in a steel box with a handle for portable applications. Two line connectors and the side tone adjustment are located on the left side of the enclosure). The channel select switch on the KB-111 allows the operator to select which channel the station will be used on. The Controls on the KB-111 are self-explanatory. The station can be used for paging only or by plugging in a Clear-Com HS-6 telephone handset or any Clear-Com headset two way communication to other stations is available. The Controls on the KB-111 are self-explanatory. The call light and call button are combined in a illuminated paddle switch. An added feature, a SPEAKER/MUTE function is also incorporated in the paddle switch. With the SPEAKER/MUTE switch in the speaker position, both the speaker and headset volume are adjustable from the volume control. In the private position the speaker is shut off but the headset remains operational.

The lamp in the paddle switch can be replaced from the front of the unit by gripping the paddle firmly by hand and pulling it out with a slight side to side rocking motion. The lamp can then be removed from the switch by carefully pulling it straight out with needle-nose pliers. The new lamp is then inserted and the paddle is replaced in the same fashion. Replacement lamps can be ordered from the factory. (Specify Clear-Com Part #5103).

The side tone adjustment is located on the amplifier module. The amount of local side tone is adjusted by turning the trim pot on the amplifier module while speaking into the microphone. Set this control after the whole system is installed. (On the KB-111P this adjustment is on the side of the enclosure). A null will be found in the adjustment where you will not be able to hear yourself. This is the point of maximum side tone rejection. Rotation of the side tone trim pot on either side of this point will give best results.

PLEASE NOTE: Adjustment of side tone does not affect the level of signal going to or from other stations. To prevent ground loops and buzzing the common ground terminal should never be directly connected to chassis ground. Conduit, a separate wire, or shield should connect the KB-111 chassis together. Refer to accompanying "KB-111 Installation Wiring" drawing for correct installation procedure.

Four (4) screw terminals and a chassis ground screw are provided for systems interconnection. The screw terminal designations are:

(1) Common Ground	(3) Audio Line CH A
(2) +28 Volts	(4) Audio Line CH B

USE
(CONTINUED)

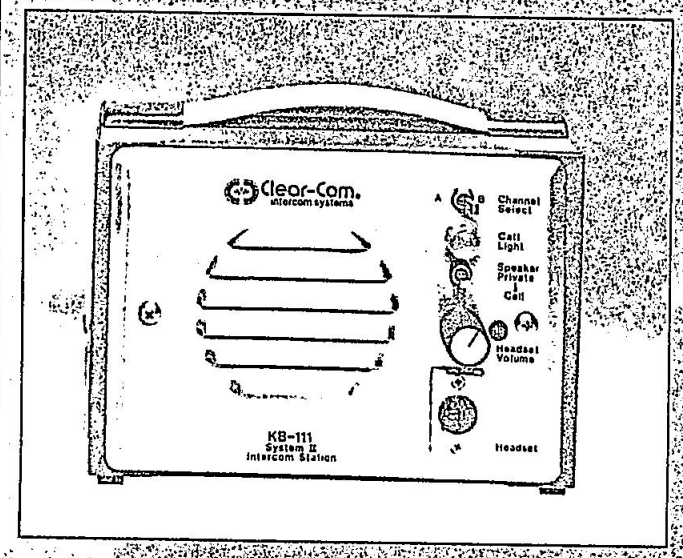

MODEL KB-111P REMOTE SPEAKER STATION

The KB-111P is a single-channel Remote Station with built-in Speaker, automatic headset detection, and visual Call signaling. While primarily intended for 1-way listening, the unit includes provisions for talkback via hand-held mic or wall mounted mic, or for private conversation via headset or handset.

The KB-111P Remote Speaker Station is packaged in a heavy-gauge painted steel box with brushed stainless steel front panel, rubber feet, and a carrying handle. It can be placed in any convenient location. Wide frequency response and high sound output (over 98 dB at 3 feet) ensure intelligibility in loud environments. The Headset Volume control adjusts the speaker or headset level and an external side tone adjustment prevents feedback. Privacy can be obtained by switching off the speaker.

KB-111P Options

(RP) Remote Paging. Permits the unit to double as a closed circuit intercom and a paging speaker station. Whenever another station's Call button is pressed in, the paging station's speaker turns on and remains on; otherwise the speaker is off. Headset operation is not affected by paging.

(2CH) Two Channels. The user can talk and listen over either Channel A or B. This option includes 6-pin input and extension connectors (D6M/D6F) and a 2-channel select switch.

(EC-5/ACCESSORY) When the KB-111P is equipped with the 2CH option, this accessory permits the two channels to be hooked up to the intercom system via two standard microphone cables. The EC-5 interconnect box has two sets of 3-pin input and extension connectors, plus a 20 foot long multi-pair cable with mating 6-pin connector.

KB-111P Controls and Connectors

Volume Control
Speaker on/Speaker off/Call switch
Adjustable side tone
1 Headset connector (D4M)
1 Input (D3F) and 1 Extension connector (D3M) for loop through to other intercom stations

MODEL CP-100 REMOTE STATION

The CP-100 is a compact, rugged single-channel (2 channel optional) Remote Station. It features dynamic headset and carbon headset capability, automatic headset detection as well as visual Call signaling, Mic On/Off switch and adjustable side tone.

The CP-100 is a light weight remote station built into a rugged matte black aluminum housing with a sturdy stainless steel belt clip. Since the unit accepts either dynamic or carbon headsets, it has broad applications, including that of a TV camera remote station. The headphone amplifier will deliver very high volume (over 110 dB SPL) with standard Clear-Com headsets. A 3-way switch is used to turn the microphone on and off, and to activate the Call signaling to other stations. Switches and controls are recessed to avoid inadvertent setting changes. Modular construction with a plug-in PC board makes the unit field serviceable.

CP-100 Options

(CC) A conformal coating protects the circuitry from adverse environmental conditions. It can be removed, should service become necessary.

(TW) The system is set up to operate with a 2-wire balanced audio dry pair. This is convenient for interface to TELCO lines and certain other intercom systems. Using this option, power must be provided by a separate 12 to 32 V DC source such as our Model BP-10 battery pack.

(RM) The Rack Mount option permits the CP-100 to be mounted in a standard 19" equipment rack.

(NS) The Non-Signal option simply omits the Call light and related circuitry for extra economy where signaling is not required.

(2CH) Two Channels. The user can talk and listen over either Channel A or B. This option includes 6-pin input and extension connectors (D6M/D6F) and a 2-channel select switch.

(EC-5 ACCESSORY) When the CP-100 is equipped with the 2CH option, this accessory permits the two channels to be hooked up to the intercom system via two standard microphone cables. The EC-5 interconnect box has two sets of 3-pin input and extension connectors, plus a 20 foot long multi-pair cable with mating 6-pin connector.

CP-100 Controls and Connectors

Headset Volume Control
Mic off/Mic on/Call switch
1 Standard Headset connector (D4M)
1 Carbon Headset connector (T-R-S 1/4" phone jack)
1 Input (D3F) and 1 Extension Connector (D3M) for loop through to other intercom stations.

* See back of catalog for electronic performance specifications, plus dimension and weight data.

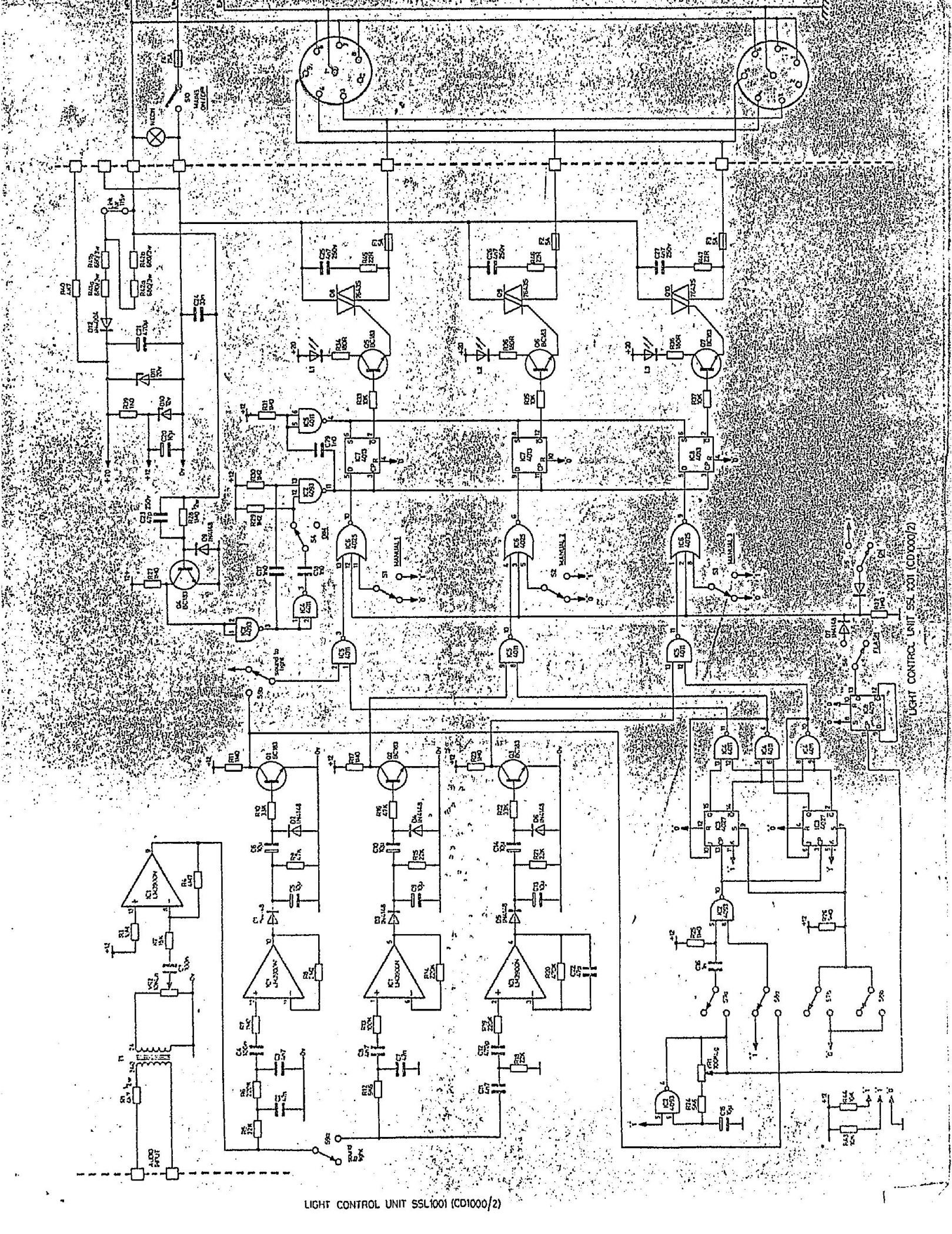

LIGHT CONTROL UNIT SSL1001 (CD1000/2)