The Harman Kardon
Model HD7600 II
COMPACT DISC PLAYER

Manual 159A

HD7600 II

Technical Manual

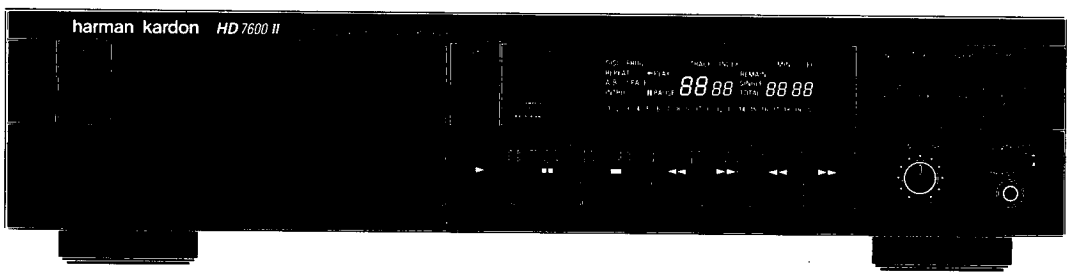

The following marks found in the parts list of this manual identify the models as follows.

- UA : North America area model
- BK : North America area model Black version
- I : International model
- IB : International model Black version
- BB : Australia model Black version
- WB : Asia/Oseania model Black version
- NB : Japan model Black version

harman/kardon
240 Crossways Park West, Woodbury, N. Y. 11797
1112-3152159A2 P-079011 2000 Printed in Japan

CLASS 1 LASER PRODUCT
Product complies with DHHS rules CFR subchapter J part 1040:10 at date of manufacture.

DANGER—invisible laser radiation when open and interlock failed or defeated. Avoid direct exposure to the beam.

CAUTION—use of all controls, adjustments or performance of procedures other than those specified herein may result in hazardous radiation exposure.

Be Careful of the Laser Pickup
Although you cannot see it from the outside, a laser pickup is located under the disc tray and a precision lens is built in it.
Since the laser pickup, including the lens element, is especially sensitive to dust, keep the disc tray closed when not in use. Also do not put your hand inside the unit.

ADVARSEL:
Usynlig laserstråling ved åbning når sikkerhedsafbrydere er ude af funktion. Undgå udsættelse for stråling.

VAROITUS!
Laite sisältää laserdiodin, joka lähettää näkymätöntä silmille vaarallista lasersäteilyä.

SPECIFICATION

System	: Compact Disc Digital Audio
D/A Converter	: Linear, Pulse Width Modulated Bit Stream, Clock Rate: 33.8688MHz (33,868.8KHz)
Signal Detection	: 3-Beam Semiconductor Optical Laser Pickup
Error Correction	: CIRC System
Low Level Linearity	: +/-0.2dB @-90dB
Frequency Response	: 4Hz to 20kHz +0dB/-.5dB
Total Harmonic Distortion (THD)	: 0.003%
Dynamic Range	: 98dB
Signal to Noise Ratio	: 106dB
Channel Separation	: 96dB
Line Output Level/Impedance	: 2.0V @ 10kΩ
Digital Output Level/Impedance	
Coaxial	: 0.5Vp-p @ 75Ω
Optical	: –18dBm
Power Supply	
U.S.A. and Canada models	: AC120V, 60Hz
International, Australia and Asia/Oseania models	: AC220/240V, 50/60Hz
Japan model	: AC100V, 50/60Hz
Power Consumption	: 20Watts
Dimensions	: 17-3/8" x 4" x 14" 443mm x 103mm x 356 mm
Weight	: 18.9lbs/8.6kg

Specifications and components subject to change without notice.
Overall performance will be maintained or improved.

Adjustment of this unit requires following measuring instruments and jigs.

- Oscilloscope (3 or more modes, 100MHz, input Select DC range) 1740A
- Test Disc: EIAJ CD-1

SAFETY PRECAUTIONS

Before returning an instrument to the customer, always make a safety check of the entire instrument, including, but not limited to, the following items:

a. Be sure that no built-in protective devices are defective and/or have been defeated during servicing.
   (1) Protective shields are provided to protect both the technician and the customer. Correctly replace all missing protective shields, including any removed for servicing convenience.
   (2) When reinstalling the chassis and/or other assembly in the cabinet, be sure to put back in place all protective devices, including, but not limited to, nonmetallic control knobs, insulating fishpapers, adjustment and compartment covers/shields, and isolation resistor/capacitor networks.
   Do not operate this instrument or permit it to be operated without all protective devices correctly installed and functioning.

b. Be sure that there are no cabinet openings through which an adult or child might be able to insert their fingers and contact a hazardous voltage. Such openings include, both are not limited to, excessively wide cabinet ventilation slots, and an improperly fitted and/or incorrectly secured cabinet back over.

c. **Leakage Current Hot Check** — With the instrument completely reassembled, plug the AC line cord directly into a 120V AC outlet. (Do not use an isolation transformer during this test.) Use a leakage current tester or a metering system that complies with American National Standards Institute (ANSI) C101.1 "Leakage Current for Appliances" and Underwriters Laboratories (UL) 1270, (34.6). With the instrument AC switch first in the ON position and then in the OFF position, measure from a known earth ground (metal waterpipe, conduit, etc.) to all exposed metal parts of the instrument (antennas, handle bracket, metal cabinet, screwheads, metallic overlays, control shafts, etc.), especially any exposed metal parts that offer an electrical return path to the chassis. Any current measured must not exceed 0.5 milliamp. Reverse the instrument power cord plug in the outlet and repeat test. **ANY MEASUREMENTS NOT WITHIN THE LIMITS SPECIFIED HEREIN INDICATE A POTENTIAL SHOCK HAZARD THAT MUST BE ELIMINATED BEFORE RETURNING THE INSTRUMENT TO THE CUSTOMER.**

AC Leakage Test

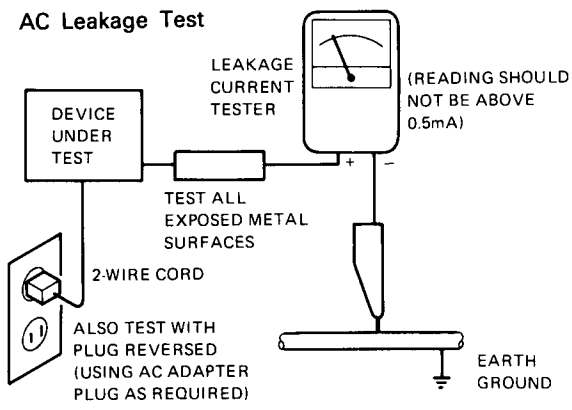

d. **Insulation Resistance Test**
   (1) Unplug the power supply cord and connect a jumper wire between the two prongs of the plug.
   (2) Turn on the power switch of the instrument.
   (3) Measure the resistance with an ohmmeter between the jumpered AC plug and each **exposed metallic** cabinet part on the instrument, such as screwheads, antenna, control shafts, handle brackets, etc. The reading should be as shown below. If it is not within the limits specified, there is the possibility of a shock hazard, and the instrument must be repaired and rechecked before it is returned to the customer.

e. **Insulation Resistance Test Cold Check**
   (1) Unplug the power supply cord and connect a jumper wire between the two prongs of the plug.
   (2) Turn on the power switch of the instrument.
   (3) Measure the resistance with an ohmmeter between the jumpered AC plug and each **exposed metallic** cabinet part on the instrument, such as screwheads, antenna, control shafts, handle brackets, etc. When the exposed metallic part has a return path to the chassis, the reading should be between 1 and 5.2 Megohm. When there is no return path to the chassis, the reading must be "infinite". If it is not within the limits specified, there is the possibility of a shock hazard, and the instrument must be repaired and rechecked before it is returned to the customer.

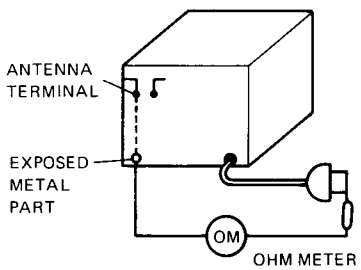

PRODUCT SAFETY NOTICE

Some electrical and mechanical parts have special safety related characteristics which are often not evident from visual inspection, nor can the protection they give necessarily be obtained by replacing them with components rated for higher voltage, wattage, etc. Parts that have special safety characteristics are identified by shading, by (⚠) on schematics and parts listed. Use of a substitute replacement that does not have the same safety characteristics as the recommended replacement part might create shock, fire, and/or other hazards. Products Safety is under review continuously and new instructions are issued whenever appropriate.

SERVICING PRECAUTIONS

CAUTION: Before servicing instruments covered by this manual and its supplements, read and follow the SAFETY PRECAUTIONS on this page.

NOTE: If unforeseen circumstances created conflict between the following servicing precautions and any of the safety precautions, **always follow the safety precautions.** Remember: Safety First.

General Servicing Precautions

a. Always unplug the instrument AC power cord from the AC power source before:
   (1) Removing or reinstalling any component, circuit board, module, or any other instrument assembly.
   (2) Disconnecting or reconnecting any instrument electrical plug or other electrical connection.
   (3) Connecting a test substitute in parallel with an electrolytic capacitor in the instrument.
   Caution: A wrong part substitution or incorrect polarity installation of electrolytic capacitors may result in an explosion hazard.

b. Do **not** defeat any plug/socket B+ voltage interlocks with which instruments covered by this manual might be equipped.

c. Do **not** apply AC power to this instrument and/or any of its electrical assemblies unless all solid-state device heat sinks are correctly installed.

d. Always connect a test instrument's ground lead to the instrument chassis ground before connecting the test instrument positive lead. Always remove the test instrument ground lead last.

NOTE: Refer to Safety Precautions on Page 3.

(1) The service precautions are indicated or printed on the cabinet, chassis or components. When servicing, follow the printed or indicated service precautions and service materials.

(2) The Components used in the unit has a specified conflammability and dielectric strength. When replacing any components, use components which has the same ratings. Components marked (⚠) in the circuit diagram are important for safety or for the characteristics of the unit. Always replace with the appointed components.

(3) An insulation tube or tape is sometimes used and some components are raised above the printed wiring board for safety. The internal wiring is sometimes clamped to prevent contact with heating components. Install them as they were.

(4) After servicing, always check that the removed screws, components and wiring have been installed correctly and that the portion around the service part have not been damaged and so on. Further check the insulation between the blades of attachment plug and accessible conductive parts.

Insulation Checking Procedure

Disconnect the attachment plug from the AC outlet and turn the power on. Connect the insulation resistance meter (500V) to the blades of the attachment plug. The insulation resistance between the each blade of the attachment plug and accessible conductive parts (Note 1) should be more than 1M-ohm.

Note 1: Accessible Conductive Parts including Metal panels, Output jacks, etc.

ELECTROSTATICALLY SENSITIVE (ES) DEVICES

Some semiconductor (solid state) devices can be damaged easily by static electricity. Such components commonly are called Electrostatically Sensitive (ES) Devices. Examples of typical ES devices are integrated circuits and some fieldeffect transistors and semiconductor "chip" components. The following techniques should be used to help reduce the incidence of component damage caused by static electricity.

1. Immediately before handling any semiconductor component or semiconductor-equipped assembly, drain off any electrostatic charge on your body by touching a known earth ground. Alternatively, obtain and wear a commercially available discharging wrist strap device, which should be removed for potential shock reasons prior to applying power to the unit under test.
2. After removing an electrical assembly equipped with ES devices, place the assembly on a conductive surface such as aluminum foil, to prevent electrostatic charge buildup or exposure of the assembly.
3. Use only a grounded-tip soldering iron to solder or unsolder ES devices.
4. Use only an anti-static solder removal device. Some solder removal devices not classified as "anti-static" can generate electrical charges sufficient to damage ES devices.
5. Do not use freon-propelled chemicals. These can generate electrical charge sufficient to damage ES devices.
6. Do not remove a replacement ES device from its protective package until immediately before you are ready to install it. (Most replacement ES devices are packaged with leads electrically shorted together by conductive foam, aluminum foil or comparable conductive material).
7. Immediately before removing the protective material from the leads of a replacement ES device, touch the protective material to the chassis or circuit assembly into which the device will be installed.
   CAUTION: Be sure no power is applied to the chassis or circuit, and observe all other safety precautions.
8. Minimize bodily motions when handling unpackaged replacement ES devices. (Otherwise harmless motion such as the brushing together of your clothes fabric or the lifting of your foot from a carpeted floor can generate static electricity sufficient to damage an ES device).

CONTROLS AND FUNCTIONS

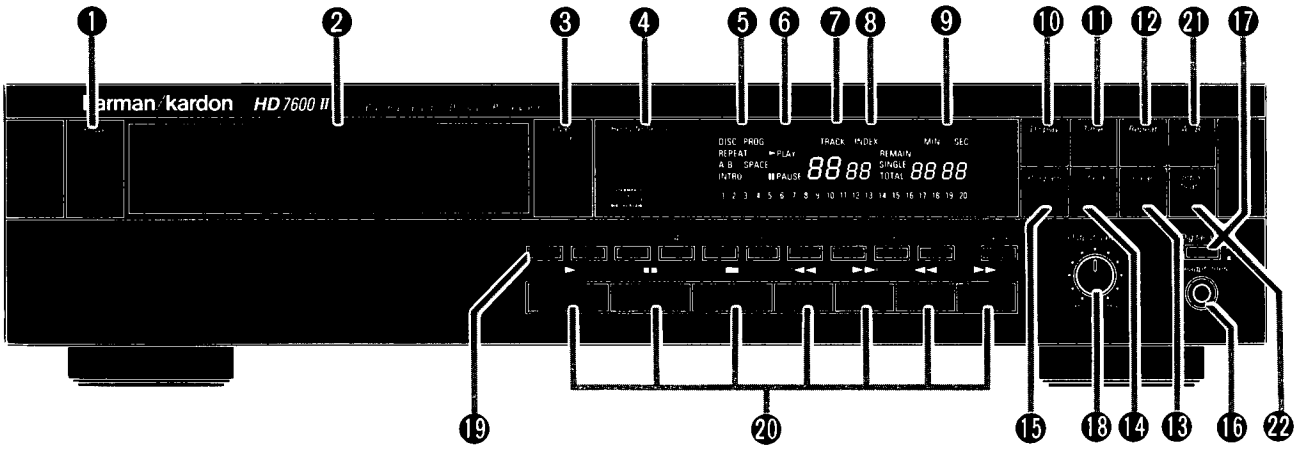

1 POWER switch

The POWER switch turns the unit on and off.

2 Compact disc drawer

Load a disc (full-size or 3-inch) into your compact disc player by placing it in this drawer with the label side up. Open and close the drawer using the OPEN/CLOSE button (3).

3 OPEN/CLOSE button

Press this button to open or close the compact disc drawer. The drawer will also close if you press the play button or push the drawer gently toward the chassis of the player; however, we recommend that you do not push the drawer.

4 REMOTE SENSOR

This area receives the signal from the remote control unit. Make sure this area of the front panel is kept free from dirt or other obstructions that might prevent proper reception of the infrared signal from the remote control.

5 FUNCTION indicator

DISC-This indicator lights when the disc drawer is open, and when a disc is loaded. It does not light when there is no disc inside.
REPEAT-When this indicator is lit, the unit is in REPEAT mode and will continuously repeat either the entire disc or the programmed sequence.
A—B-When this indicator is lit steadily, the unit is set to repeat a specified section of the disc (from A to B). When repeat indicator is lit, you have already programmed the starting point (point A) of a section, and the unit is waiting for you to program the ending point of the section (point B).
INTRO-When this indicator is lit, the unit is in INTRO SCAN mode and will play only the first 15 seconds of each selection on the disc or in the selected program.
PROG-When this indicator is lit, the unit is in PROGRAM mode, in which you can program a sequence of tracks in the order you'd like to hear them, then play back your programmed sequence.
SPACE-When this indicator is lit, the unit is in SPACE mode and will insert 4 seconds of space between tracks.

6 PLAYBACK mode

PLAY-This indicator is lit when the unit is playing a track.
PAUSE-This indicator is lit when the unit is in PAUSE mode (i.e., you have pressed PAUSE to temporarily stop playback).

7 TRACK indicator

When a disc is loaded but not playing, the TRACK indicator displays the total number of tracks on that disc. During playback, the indicator displays the number of the track currently being played. During programming, it displays the number of the track most recently selected.

8 INDEX indicator

Some discs that contain very long tracks may have those tracks subdivided into shorter sections. For example, a long classical piece may be divided into movements, each of which may have an index number. The INDEX indicator displays the number of the subdivision of a track currently being played. If the track has no subdivisions, the INDEX indicator will display a 1 during playback. During programming, the INDEX light goes out and the indicator displays the total number of tracks selected in the programmed sequence.

9 TIME indicator

When a disc is loaded but not playing, the TIME indicator displays the total amount of playback time on that disc. During playback, depending on the state of the TIME button (9), the indicator displays one of the following.

- The time that has elapsed since the beginning of the current track.
- The time that remains on the currently selected track. The words REMAIN SINGLE will be displayed if the indicator is in this mode.
- The time that remains on either the entire disc or on the programmed selections. The words REMAIN TOTAL will be displayed if the indicator is in this mode. Note that if you have programmed more than 99 minutes in your selection, only dashes will appear in this mode.

10 DISPLAY button

This button turns the display on and off. When you turn the display off in PLAY mode, the entire display goes off. In PAUSE mode, most of the display goes off, but the track number is still displayed. In STOP mode, most of the display goes off, but the total number of tracks on the disc is still displayed. In some systems, turning the fluorescent display off may provide the purest possible sound quality during playback.

11 TIME button

During playback or programming, this button cycles through the three TIME display modes
* The time that has elapsed since the beginning of the current track.
* The time that remains on the currently selected track.
* The time that remains on either the entire disc or the programmed sequence.

⑫ REPEAT button

This button puts your compact disc player in and out of REPEAT mode. In REPEAT mode, the unit will continually play back either the entire disc or the programmed sequence of tracks. Press the button once to turn on REPEAT mode; press again to turn off REPEAT mode. When the unit is in REPEAT mode, the FUNCTION indicator (5) will display the word REPEAT.

⑬ CLEAR button

The CLEAR button removes tracks from your programmed sequence one by one starting with the last track entered. Each time you clear a track from the programmed sequence, that track's time is deleted from the total time displayed. This button is used only in PROGRAM mode.

⑭ CHECK button

When a disc is loaded but not playing (STOP mode), you can press the CHECK button to see the playback time of each track on the disc. Each time you press the CHECK button, the next track is displayed along with its playback time. When you have stepped sequentially through all the tracks on the disc, another press of the CHECK button displays the total playback time of the entire disc. In PROGRAM mode, the CHECK button displays the cumulative time of the tracks in the programmed sequence. That is, the first press displays the time of the first programmed track, the second press displays the cumulative playback time of the first and second tracks, and so on.

⑮ PROGRAM button

This button puts your compact disc player in and out of PROGRAM mode. Press the button once to turn on PROGRAM mode; press again to turn it off. In PROGRAM mode, you can program a set of tracks to play in any sequence. (For instructions on programming a sequence of tracks, see the Operations section of instruction manual.) When the unit is in PROGRAM mode, the FUNCTION indicator (5) will display the word PROG in red.

⑯ HEADPHONES jack

Stereo headphones with a standard 1/4" plug can be connected to this jack.

⑰ DIGITAL OUT button

This button switches the digital output jacks on and off. Press the button to turn these outputs on only when using the optinal digital output connections.

⑱ OUTPUT LEVEL control

This knob controls the volume of the variable output jacks on the rear panel as well as the headphone volume. You can use this output volume control to match the volume of your compact disc player with the volume of your turntable or tuner. In systems where the compact disc player is connected directly to the power amplifier, the OUTPUT LEVEL control provides the volume control for the system.

⑲ Track selection buttons

This set of buttons (numbered 1 through 10 and +10) enables you to directly select the track you want to play. To select a track with a number higher than 10, press the +10 button, then press the button that will add up to the number of the track you want. For example, to select track 14, press +10, then press 4. If you select a track number that does not exist on your disc, the TRACK indicator will continue to display the number of the last track on the disc. When PROGRAM mode is off, pressing a track button plays the track you select. When PROGRAM mode is on, pressing a track button programs that track into your sequence.

⑳ Playback controls

PLAY- ► The PLAY button starts playback of a track.
PAUSE- ■■ Pressing the PAUSE button temporarily stops playback. Pressing the PAUSE button again, or pressing PLAY, resumes playback at the precise point where playback left off.
STOP- ■ The STOP button stops playback. When you press PLAY, playback will start either at the beginning of the disc or programmed sequence, or at any track you select.
SKIP BACK-I◄◄ Pressing this button once skips back to the beginning of the present track. If you are in PLAY mode, playback will resume. Holding the button down skips backward to the beginning of each preceding track until the first track on the disc is reached.
SKIP FORWARD-►►I Pressing this button once skips forward to the beginning of the next track. If you are in PLAY mode, playback will resume. Holding the button down skips forward to the beginning of each subsequent track until the last track on the disc is reached.
SEARCH BACK- ◄◄Holding down this button during playback reverses rapidly through the disc. This function is similar to the "Rewind" function on a tape deck.
SEARCH FORWARD- ►► Holding down this button during playback speeds rapidly forward through the disc. This function is similar to the "Fast forward" function on a tape deck.

REMOTE CONTROL

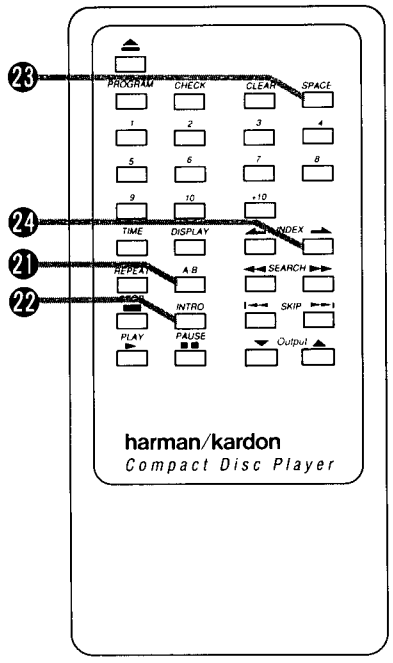

NOTE that the HD7600II remote control also has buttons for remote output level control.

The remote control for the HD7600II provide the same functions found on the front panel of the compact disc player itself. In addition, the remote control provides some functions that are not found on the front panel.

The functions found on the remote control that are not found on the front panel are INDEX and SPACE. These two functions are described below (for other functions, see the descriptions above).

㉑ A-B button

This button puts your compact disc player in and out of A-B mode. In A-B mode, the unit will continually play back a "phrase" or section of your disc beginning at point A and ending at point B. When the unit is in A-B mode, the FUNCTION indicator (5) will display REPEAT A-B.

㉒ INTRO button

This button puts your compact disc player in and out of INTRO SCAN mode. When INTRO SCAN is on and you press PLAY, the unit plays only the first 15 seconds of each track before moving on to the next. Press the button once to turn on INTRO SCAN mode; press again to turn it off and stop the scanning. When the unit is in INTRO SCAN mode, the FUNCTION indicator (5) will display the word INTRO.

㉓ SPACE button

This button puts your compact disc player in and out of SPACE mode. Press the button once to turn on SPACE mode; press

again to turn it off. In SPACE mode, the unit inserts 4 seconds of blank space between tracks. This is particularly useful if you are recording music from a compact disc onto a tape. Tape decks with a Music Search feature will be able to use the 4 seconds of space to correctly identify the beginning of each selection on the tape. When the unit is in SPACE mode, the FUNCTION indicator (5) will display the word SPACE.

㉔ INDEX buttons

Some discs contain long selections that may subdivided into shorter sections (for example, operas). Just as the tracks are marked by the track number, these shorter sections may be marked by index numbers. When you have started playback of the desired track, you can use the INDEX UP and INDEX DOWN buttons to jump to a desired index selection. Each time you press an INDEX button, the INDEX indicator displays the next higher or lower index number. If you continue pressing the button until the indicated index number is higher than the actual number of index selections on the disc, playback will start from the nearest index selection.

The remote control operates within a 30° angle of the remote sensor on the front panel of the unit. Make sure that the remote's front projection "lens" as well as the REMOTE SENSOR area on the front panel of the unit are kept free from dirt to ensure proper transmission and reception of the infrared beam. Also make sure that no objects (e.g., stereo cabinet doors, end tables) block the path from the remote control to the REMOTE SENSOR area.

Avoid using the remote control near fluorescent lamps, as they may shorten its operating range.

DISASSEMBLY PROCEDURES (REFER TO PAGES 39, 40 AND 44)

[1] CABINET TOP (123) REMOVAL

Remove 7 screws (A) and then remove the Cabinet Top (123).

[2] FRONT PANEL ASS'Y (AA) REMOVAL

1. Remove the Cabinet Top (123), referring to the previous step [1].
2. Disconnect the connector with lead wires (LCN109, LCN110, LCN111, LCN112 and LCN116) from connectors (CN109, CN110, CN111, CN112 and CN116) on the Main P. C. Board (PCB-1).
3. Open the lid of connectors (CN106, CN107 and CN108) on the Main P. C. Board (PCB-1), then disconnect the jumper leads (W106, W107 and W108).
4. Remove 7 screws (B) and then remove the Front Panel Ass'y (AA) with the Front P. C. Board (PCB-2) and the Output Level & Jack P. C. Board (PCB-3).
5. Remove a nut (C) fixing the output level volume and then remove the Output Level & Jack P. C. Board (PCB-3) from the Front Panel Ass'y (AA).
6. Remove 9 screws (D) and then remove the Front P. C. Board (PCB-2) from the Front Panel Ass'y (AA).

[3] MAIN P. C. BOARD (PCB-1) REMOVAL

1. Remove the Cabinet Top (123), referring to the previous step [1].
2. Disconnect the connector with lead wires (LCN115, LCN114, LCN113, LCN117, LCN109, LCN110, LCN111, LCN112 and LCN116) from connectors (CN115, CN114, CN113, CN117, CN109, CN110, CN111, CN112 and CN116) on the Main P. C. Board (PCB-1).
3. Open the lid of connectors (CN119, CN106, CN107 and CN108) on the Main P. C. Board (PCB-1), then disconnect the jumper leads (JL1, JL2, W106, W107 and W108).
4. Remove 9 screws (E) and then remove the Main P. C. Board (PCB-1).
5. Remove the Front Panel Ass'y (AA), referring to the previous step [2]-4 and then remove the Shaft (169).
6. Open the lid of connector (CN119) on the Main P.C. Board (PCB-1), then disconnect the jumper leads (JL1 and JL2).
7. Remove 5 screws (F) and then remove the Power Switch P. C. Board (PCB-4).
8. Disconnect the connector with lead wire (LCN910) from connector (CN910) on the Remote Jack P.C. Board (PCB-5).
9. Remove 1 screw (G) and then remove the Remote Jack P. C. Board (PCB-5).

[4] CD PLAYER MECHANICAL ASSEMBLY (103) REMOVAL

1. Remove the Cabinet Top (123), referring to the previous step [1].
2. Disconnect the connector with lead wires (LCN115, LCN114, LCN113 and LCN117) from connectors (CN115, CN114, CN113 and CN117) on the Main P. C. Board (PCB-1).
3. Remove 3 screws (H) and then remove the CD Player Mechanical Assembly (103) backward.

DISASSEMBLING THE CD PLAYER MECHANICAL ASSEMBLY

[5] DISC TRAY (16) REMOVAL

1. Remove the Cabinet Top (123), referring to the previous step [1].
2. Connect the Power cord and turn on the power by pressing the Power switch.
3. Open the Disc Tray (16) by pressing the Open/Close button.
4. With the Disc Tray (16) opened as it is, pull out the power plug.
5. Push the Disc Tray (16) by hand to slide it in once.
6. Loosen the screws (I) and then slide out the Disc Tray (16) by hand.

[6] OPTICAL PICK-UP (52) REMOVAL

1. Remove the CD Player Mechanical Assembly (103), referring to the previous step [4].
2. Remove 4 screws (J) and then remove the Disc Motor Ass'y (63) with Pick-up, Slide Motor and etc.
3. Remove 2 screws (K) and then remove the Gears (59 and 60).
4. Remove the 2 screws (L) and then remove the Shaft Clamps (62), then remove the Pick-up (52) with shaft.

[7] SLIDE MOTOR (57) REMOVAL

1. Remove the Gears (59 and 60), referring to the previous step [6]-3.
2. Unsolder the terminal of Disc and Slide Motors, then remove the Motor P. C. Board (65).
3. Remove 2 screws (M) and then remove the Slide Motor (57).

POWER CORD REPLACEMENT (FOR SERVICE ENGINEERS OTHER THAN NORTH AMERICA)

In order to prevent fire or shock hazard when replacing the power cord, follow the procedure below to replace the part with the standard supply parts.

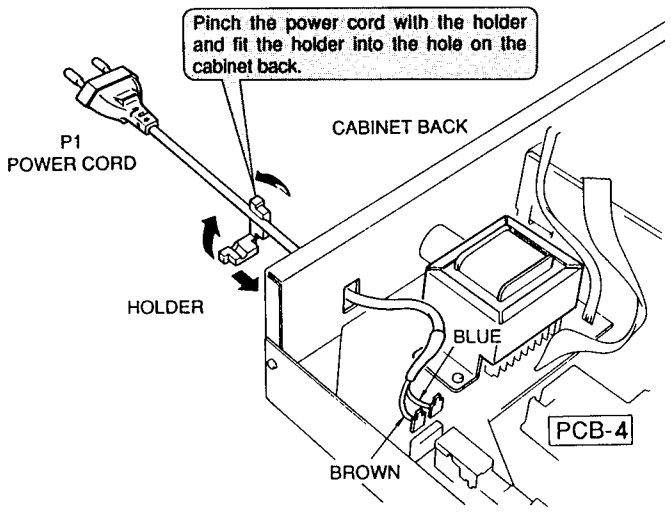

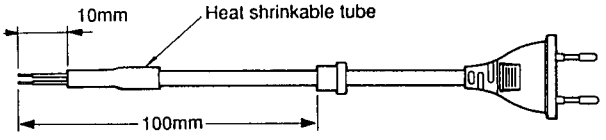

ADJUSTMENT PROCEDURE

1. Instruments required

- DC voltmeter
- Oscilloscope (3 or more modes, 100 MHz, input select DC range)
- Jitter meter
- Test disc: EIAJ CD-1

2. Adjustment points

2-1 Adjusting screw layout for CD player mechanical assembly.

Top view

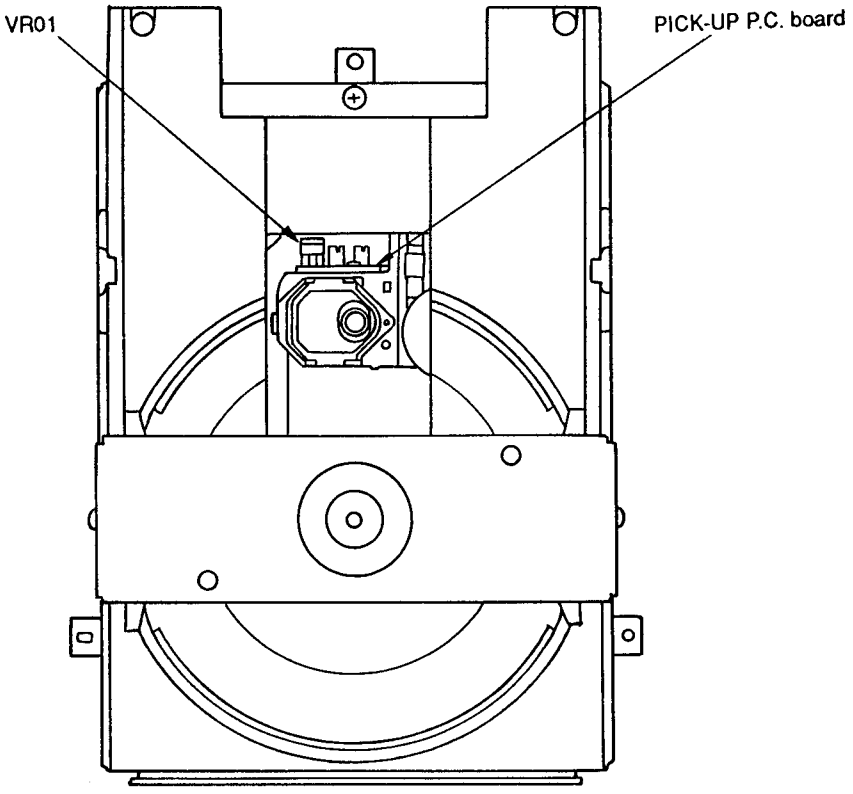

2-2 VR and test point layout for main P.C. board.

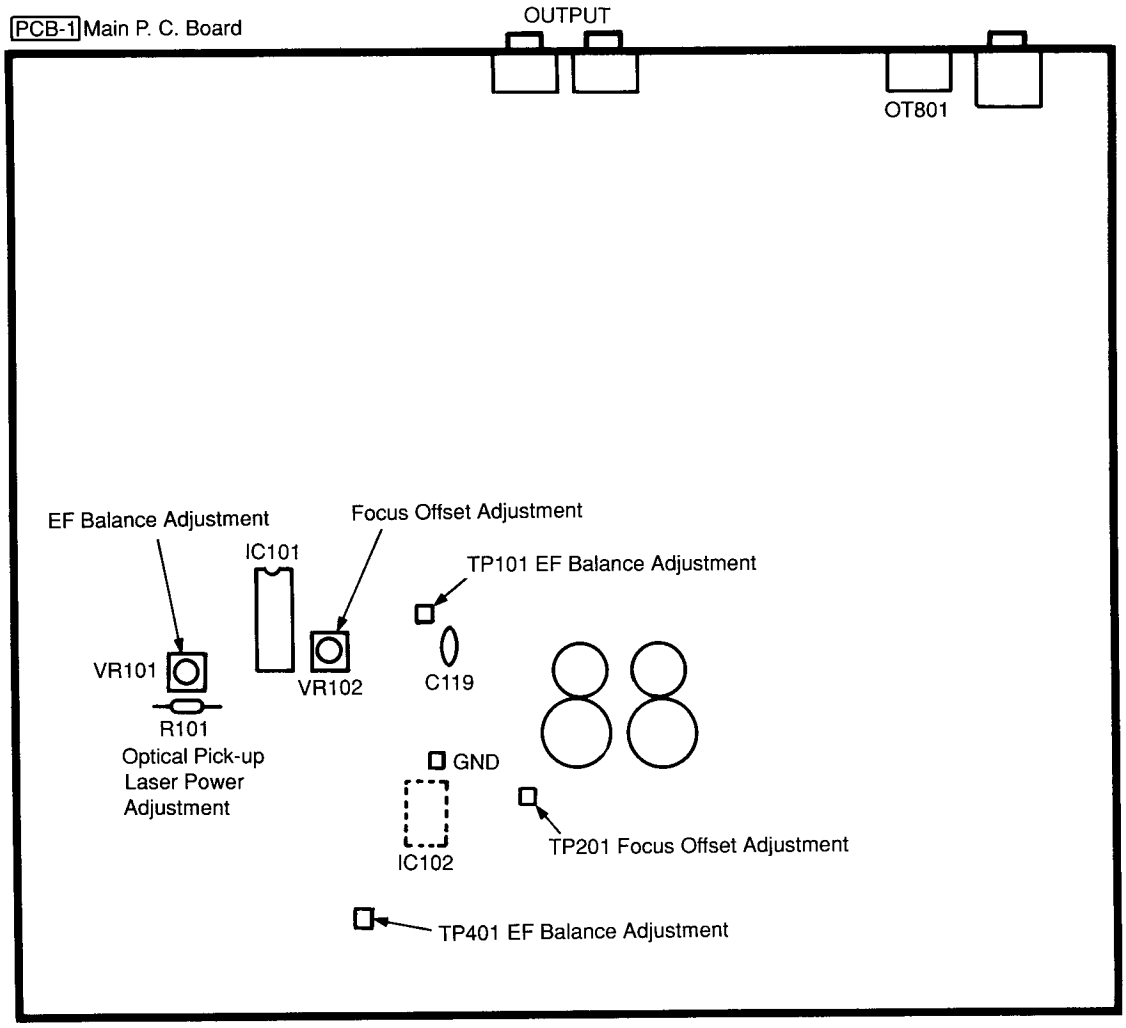

3. Optical Pick-up Laser Power Adjustment

The specified value for adjustment varies with the type of the pick-up in use. Obtain the voltage value according to the following procedure.

(a) Read the current value on the label of the pick-up P.C. board.

(b) Using the amperage of the current and the following equation, calculate the voltage value.
When the current is 44.1mA: V=0.0441A x 22=0.9702V

(1) Connect the DC voltmeter to both ends of R101.

(2) Insert EIAJ CD-1 test disc and place the unit in the Play mode.

(3) Adjust VR01 in the pick-up P.C.board to the voltage obtained in step (b) above.

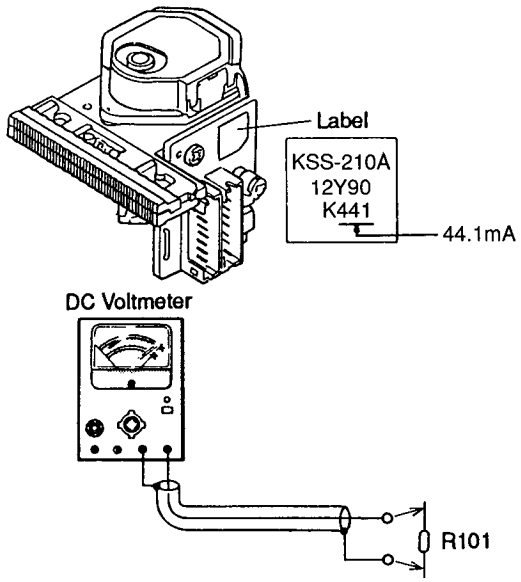

4. EF Balance Adjustment

(1) Connect the oscilloscope (0.5V/div, 5 msec./div, DC mode) to TP101 and GND.
Short-circuit TP401 and GND.

(2) Insert EIAJ CD-1 test disc and place the unit in the Play mode.

(3) Adjust VR101 so that the amplitude above and below the zero DC line becomes equal. (Amplitude A = Amplitude B)

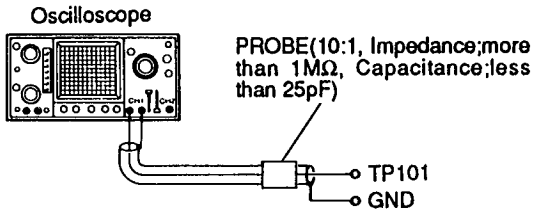

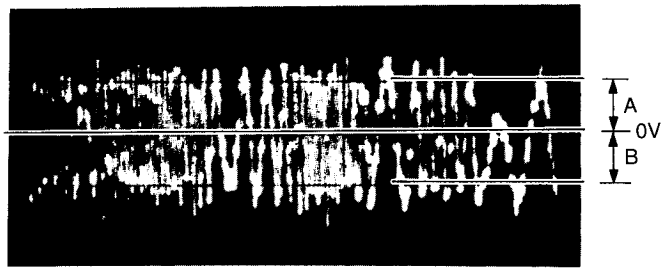

A=B

(approx. 1.5Vp-p)

5. Focus Offset Adjustment

(1) Connect the Jitter meter to TP201 and GND.

(2) Insert EIAJ CD-1 test disc and place the unit in the play mode.

(3) Adjust VR102 until the jitter for optimum sensitivity.

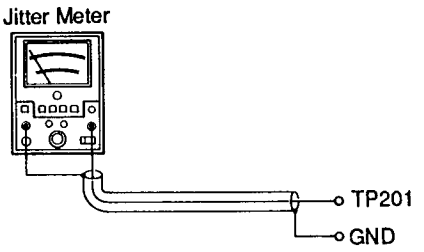

6. Jitter Inclination Confirmation

(1) Connect the Jitter meter (sigma range) to TP201 and GND.

(2) Insert EIAJ CD-1 test disc and place the unit in the Play mode.

(3) Confirm the jitter meter reading is less than 30ns.

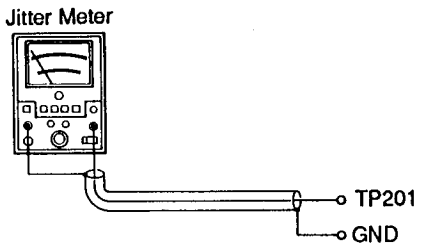

TROUBLE SHOOTING

When a trouble has occurred, first check the pick-up lens for dirt and each connector for tight and secure connection. If the problem persists after checking both of these items, use the following check procedures.

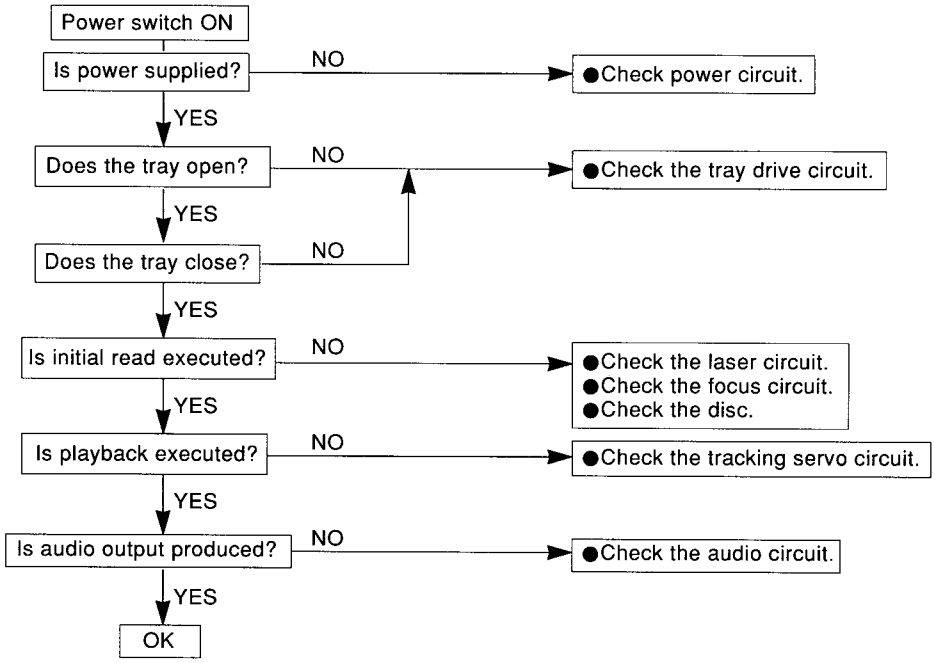

(1) When Multi Display fails to light properly

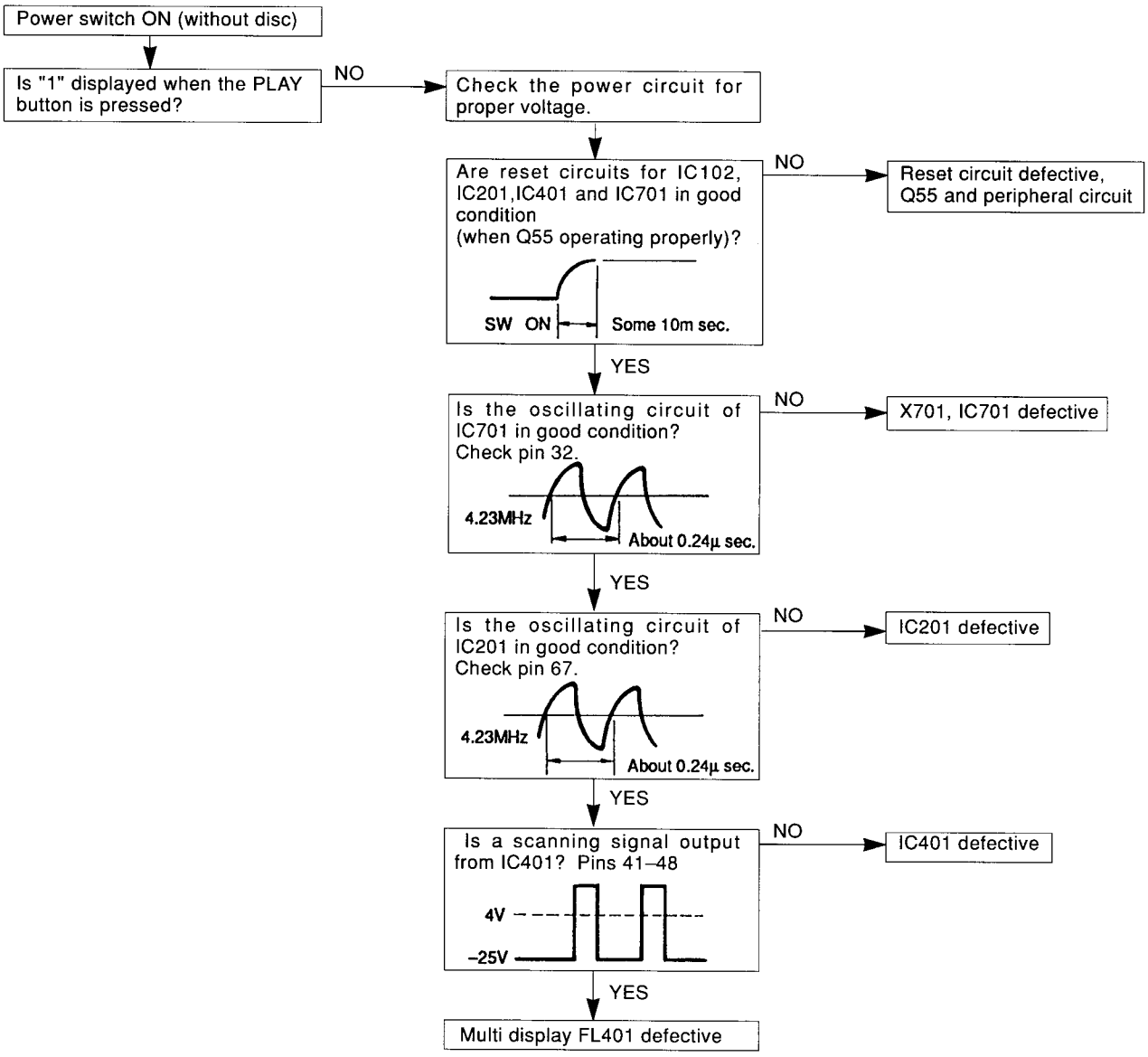

(2) When the tray fails to operate properly

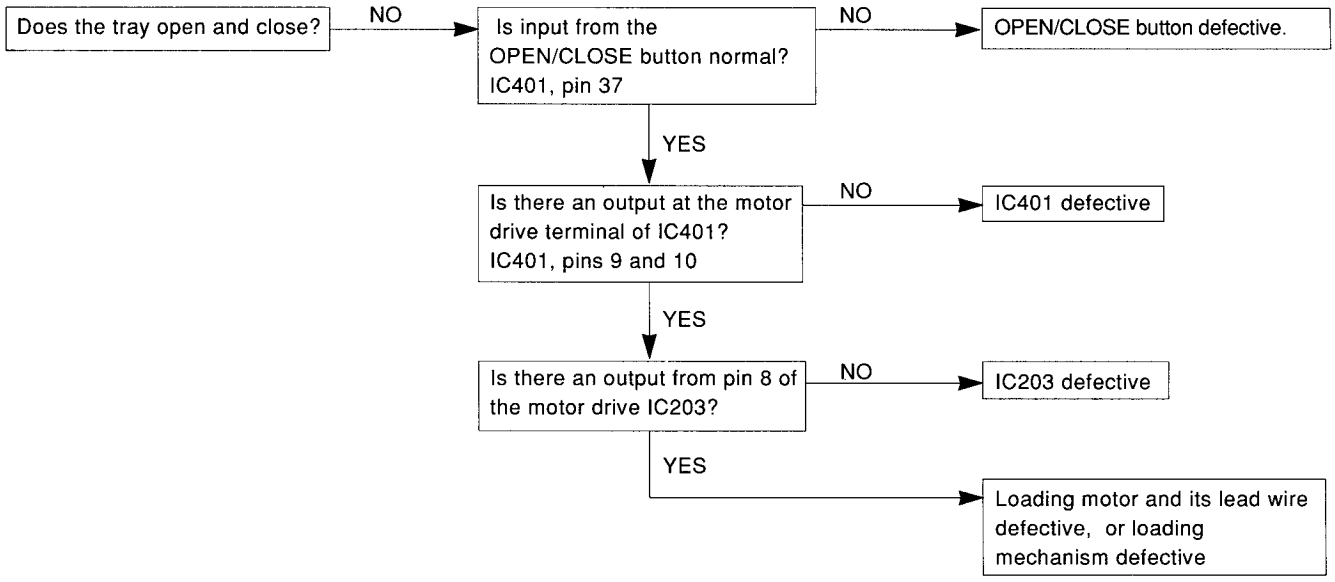

(3) When initial read cannot be executed

The following checks can be done without a disc loaded.

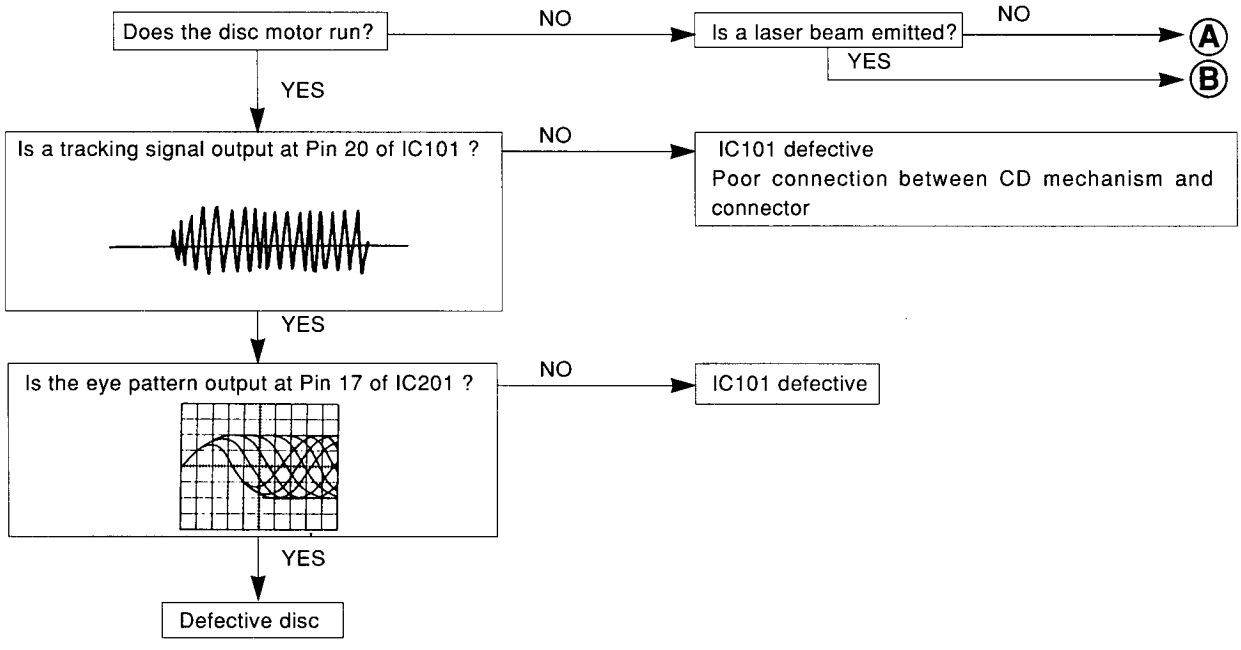

Ⓐ When laser beam is not emitted

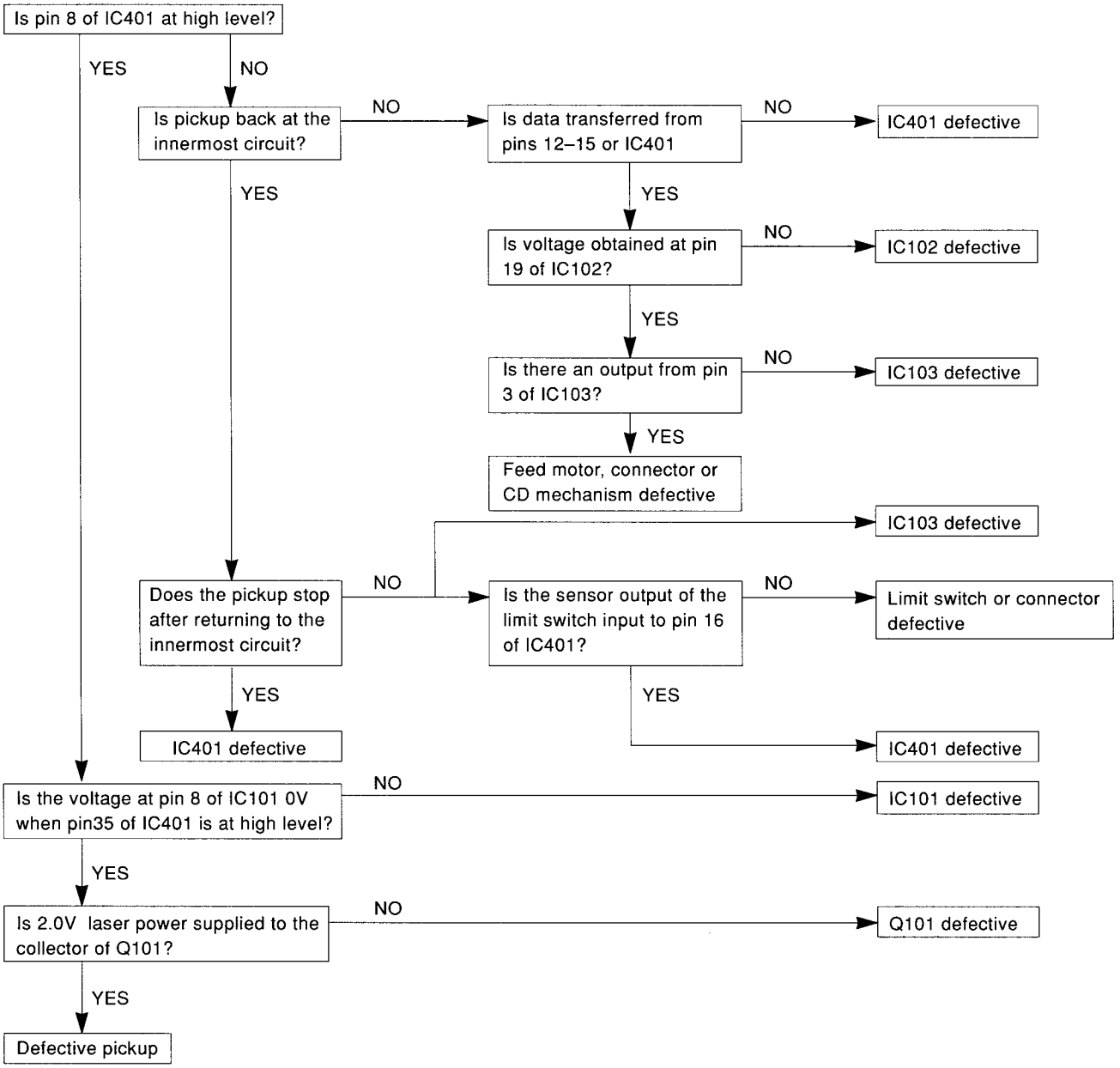

Ⓑ When laser beam is emitted

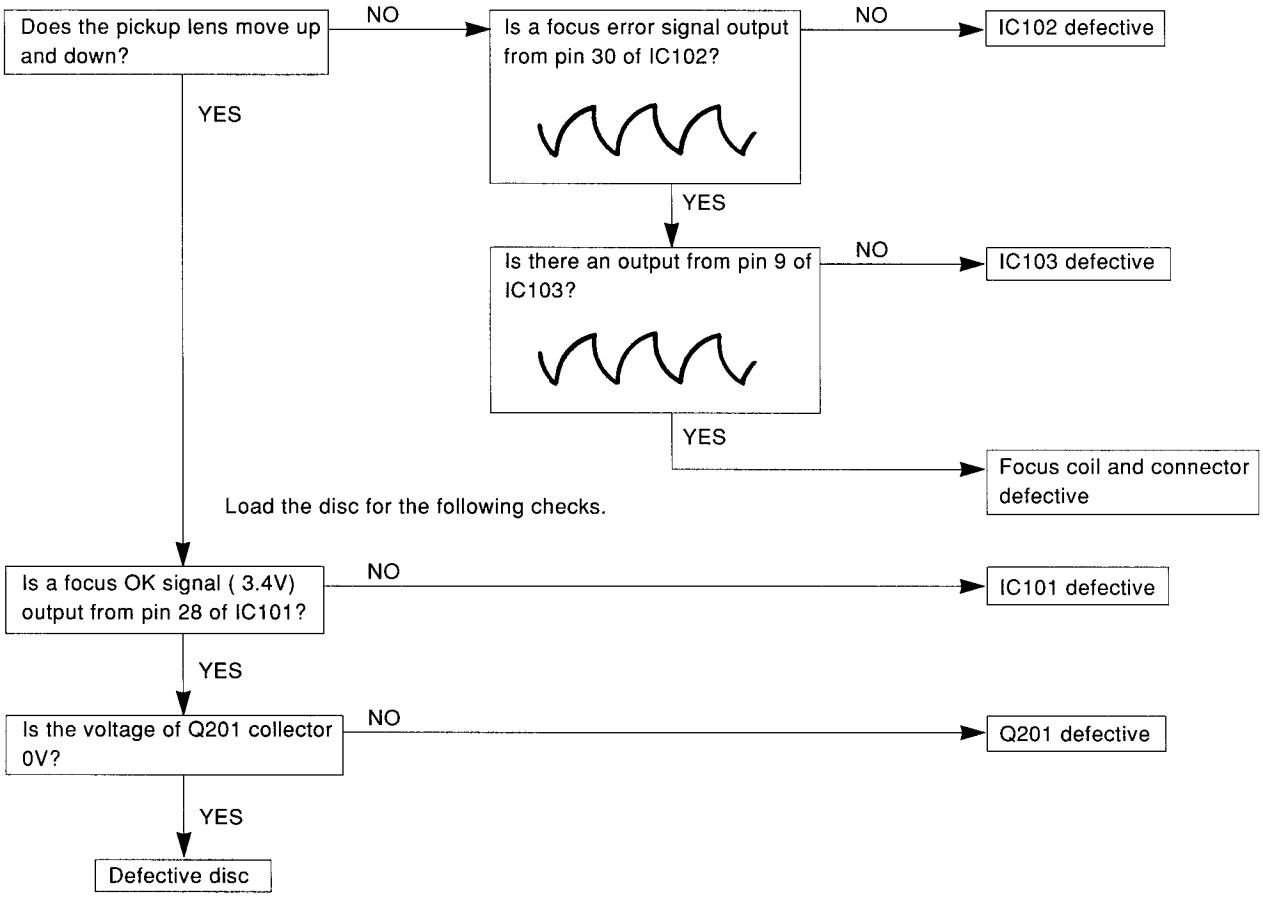

When there is no audio output

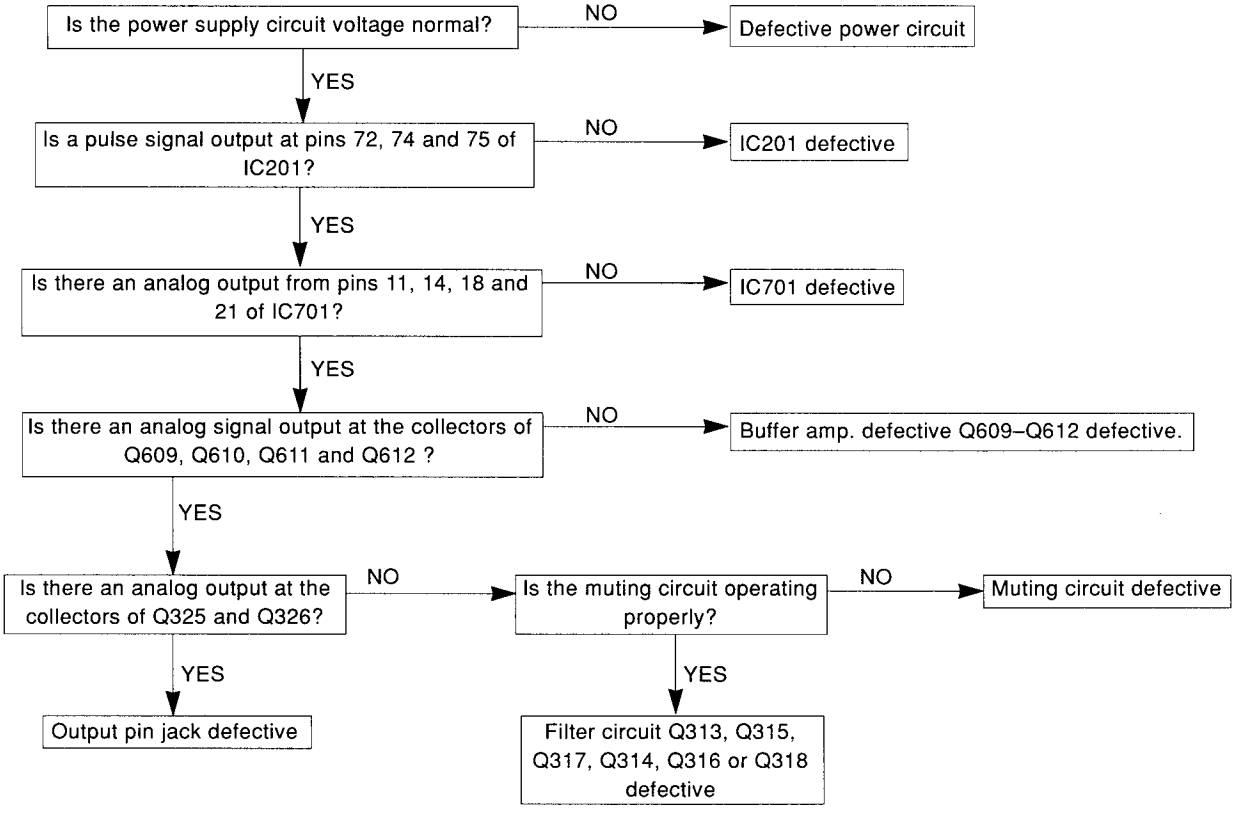

IC TERMINAL FUNCTIONS

IC number	Terminal number	Port name	Terminal code	I/O	Outline of functions
IC101	1	RFI		I	RF summing amp. input terminal.
	2	RFO		O	RF summing amp. output terminal.
	3	RF-		I	RF summing amp. return input terminal.
	4	P/N		I	Laser diode P/N select terminal.
	5	LD		O	APC LD amp. output terminal.
	6	PD		I	APC PD amp. input terminal.
	7	PD1		I	RF I-V amp. (1) invert input terminal.
	8	PD2		I	RF I-V amp. (2) invert input terminal.
	9	VC		—	GND terminal.
	10	F		I	F I-V amp. invert input terminal.
	11	E		I	E I-V amp. invert input terminal.
	12	EO		O	E I-V amp. output terminal.
	13	EI		I	E I-V amp. return input terminal.
	14	VR		O	DC voltage output terminal.
	15	CC2		I	DEFECT signal input terminal.
	16	CC1		O	DEFECT signal output terminal.
	17	V_{EE}		—	Negative power terminal.
	18	FE BIAS		I	Focus error amp. bias terminal.
	19	FE		O	Focus error amp. output terminal.
	20	TE		O	Tracking error amp. output terminal.
	21	DEFECT		O	DEFECT comparator output terminal.
	22	MIRR		O	MIRR comparator output terminal.
	23	CP		I	MIRR hold capacitor connect terminal.
	24	CB		I	DEFECT hold capacitor connect terminal
	25	DGND		—	GND terminal.
	26	ASY		I	Auto asymmetry control input terminal.
	27	EFM		O	EFM comparator output terminal.
	28	FOK		O	Focus OK comparator output terminal.
	29	$\overline{\text{LD ON}}$		I	Laser diode on/off select terminal.
	30	Vcc		—	Positive power terminal.

IC number	Terminal number	Port name	Terminal code	I/O	Outline of functions
IC102	1	TE IN	Pre amp. input	I	Tracking error signal input terminal.
	2	TC IN	Pre amp. input	I	Track cross signal input terminal.
	3	SHOCK IN	Pre amp. input	I	Shock detector signal input terminal.
	4	HF OK	Pre amp. input	I	HF OK signal input terminal.
	5	MR	Pre amp. input	I	Mirror detected signal input terminal.
	6	Jump Flag	Mi-com I/O	O	Outputs "H" under jump function.
	7	$\overline{\text{HFD}}$	Mi-com I/O	O	"1" indicates that MR input is "1" and track servo loop is off (TS OFF, JF, JR).
	8	T•HLD	Track servo	I	Direct control terminal for TS1 switch. "1" indicates that TS1 switch is "b". "0" indicates that priority is given to controller command.
	9	DATA OUT	Mi-com I/O	O	Inner condition output changed by command modes.
	10	$\overline{\text{JP1}}$	Mi-com I/O	I	1 track jump control signal. Usually "H".
	11	MSD	Mi-com I/O	I	Serial data input terminal (LSB first, 8-bit data).
	12	$\overline{\text{MLA}}$	Mi-com I/O	I	Latch signal of serial data from mi-com to servo IC.
	13	MCK	Mi-com I/O	I	Clock signal of serial data from mi-com to servo IC. Receives data on leading edge.
	14	$\overline{\text{ACLR}}$	Mi-com I/O	I	All clear input. (Clear inner registors and flip-flops by "L" signal.)
	15	Bias	Power supply	O	Vcc/2 bias power supply output when single-pole power supply is used.
	16	COM	Power supply	I	Common terminal. Connect to GND when double-pole power supply is used and to BIAS when single-pole power supply is used.
	17	GND	Power supply	I	GND terminal.
	18	V_{EE}	Power supply	I	Negative power terminal. Connect to GND when single-pole power supply is used.
	19	SS OUT	Slide servo	O	Operation amplifier SS output.
	20	SS ⊖	Slide servo	I	Operation amplifier SS reverse input.
	21	SS ⊕	Slide servo	I	Operation amplifier SS non-reverse input.
	22	TS OUT	Track servo	O	Operation amplifier TA output.

IC number	Terminal number	Port name	Terminal code	I/O	Outline of functions
IC102	23	TS⊖	Track servo	I	Operation amplifier TA reverse input.
	24	TG2	Track servo	—	Track gain select switch TG2 output. Set to open or common level.
	25	TS⊕	Track servo	I	Operation amplifier TA non-reverse input.
	26	TG1	Track servo	—	Track gain select switch TG1 output. Set to open or common level.
	27	TE OUT	Track servo	O	Operation amplifier TE output.
	28	TE⊖	Track servo	I	Operation amplifier TE reverse input.
	29	FSR IN	Focus servo	I	Focus search voltage level detector input.
	30	FS OUT	Focus servo	O	Operation amplifier FA output.
	31	FS⊖	Focus servo	I	Operation amplifier FA reverse input.
	32	FS⊕	Focus servo	I	Operation amplifier FA non-reverse input.
	33	FG	Focus servo	—	Focus gain select switch FG output. Set to open or common level.
	34	C•FSR	Focus servo	—	Connect capacitor which determines time constant of focus search waveform.
	35	I-Ref	Power supply	I	Terminal for connecting resistor for setting current value of reference current source.
	36	Vcc	Power supply	I	Positive power terminal.
IC103	1	+VIN 1		I	Positive input terminal 1 for amp. 1.
	2	-VIN 1		I	Negative input terminal 1 for amp. 1.
	3	OUT 1		O	Output terminal 1.
	4	OUT 2		O	Output terminal 2.
	5	-VIN 2		I	Negative input terminal 2 for amp. 2.
	6	+VIN 2		I	Positive input terminal 2 for amp. 2.
	7	+VIN 3		I	Positive input terminal 3 for amp. 3.
	8	-VIN 3		I	Negative input terminal 3 for amp. 3.
	9	OUT 3		O	Output terminal 3.
	10	NC		—	

IC number	Terminal number	Port name	Terminal code	I/O	Outline of functions
IC103	11	NC		—	
	12	Vcc		—	Positive power supply.
IC201	1	EMP		O	Emphasis code output. Emphasis = "1"
	2	PWM1		O	Disc motor drive PWM output 1. -
	3	PWM2		O	Disc motor drive PWM output 2. +
	4	DOTX		O	Digital output.
	5	ACRCY		I	Channel status clock input.
	6	TEST1		I	Test mode select input.
	7	DOBSEL		I	Output data bit select.
	8	DASEL1		I	D/A converter interface select input 1.
	9	DASEL2		I	D/A converter interface select input 2.
	10	DASEL3		I	D/A converter interface select input 3.
	11	DASEL4		I	D/A converter interface select input 4.
	12	MSD		I	Microcomputer interface serial data input.
	13	MCK		I	Microcomputer interface shift clock input.
	14	$\overline{\text{MLA}}$		I	Microcomputer interface data latch clock input
	15	$\overline{\text{ACLR}}$		I	Microcomputer interface register clear input.
	16	$\overline{\text{HFD}}$		I	Play signal absence signal input.
	17	HF		I	Play signal input.
	18	IREF		I	Detection/PLL circuit reference current input.
	19	TLC		O	Slice level control output.
	20	LPF		I/O	PLL loop filter connection terminal.
	21	LOCK/DRD		O	Synchronous/low disc rotate status output.
	22	SYCLK		O	Frame synchronous status output.
	23	$V_{DD}2$		I	5V power supply used for Detection/PLL circuit analog area only.
	24	DRD		O	Low disc rotate status output.
	25	EFFK		O	EFM frame clock output.
	26	SCINT		O	Subcode Q interrupted signal output.
	27	SQRO		O	Subcode Q register output.
	28	SQRCK		I	Subcode Q register data shift clock input.
	29	SCOR		O	Subcode synchronous signal output.

IC number	Terminal number	Port name	Terminal code	I/O	Outline of functions
	30	CRCF		O	Subcode Q CRC check result output.
	31	SCCK		I	Shift clock input for serial subcode data output.
	32	$V_{SS}2$		I	GND terminal.
	33	SCOE2		I	Subcode parallel output channel P to S enable input.
	34	SCOE1		I	Subcode parallel output channel T to W enable input.
	35	SBCW		O	Subcode channel W output.
	36	SBCV		O	Subcode channel V output.
	37	SBCU		O	Subcode channel U output.
	38	SBCT		O	Subcode channel T output.
	39	SBCS		O	Subcode channel S output.
	40	SBCR		O	Subcode channel R output.
	41	SBCQ		O	Subcode channel Q output.
	42	SBCP		O	Subcode channel P output.
IC201	43	$\overline{RAS}$		O	Row address strobe signal output.
	44	NC		—	
	45	RDB2		I/O	External memory data I/O 2.
	46	NC		—	
	47	RDB1		I/O	External memory data I/O 1.
	48	RDB4		I/O	External memory data I/O 4.
	49	$\overline{CAS}$		O	Column address strobe signal output.
	50	RDB3		I/O	External memory data I/O 3.
	51	$\overline{WE}$		O	Write enable signal output.
	52	NC		—	
	53	RAD1		O	External memory address output 1.
	54	RAD2		O	External memory address output 2.
	55	RAD3		O	External memory address output 3.
	56	RAD7		O	External memory address output 7.
	57	RAD4		O	External memory address output 4.
	58	RAD5		O	External memory address output 5.
	59	RAD6		O	External memory address output 6.

IC number	Terminal number	Port name	Terminal code	I/O	Outline of functions
IC201	60	RAD0		O	External memory address output 0.
	61	EST2		O	Error status 2.
	62	EST1		O	Error status 1.
	63	$V_{DD}1$		I	5V power supply.
	64	DOFK		O	OSC frame clock output.
	65	FSCK		O	Clock output. 44.1kHz
	66	C846		O	Clock output. 8.4672MHz
	67	C423		O	Clock output. 4.2336MHz
	68	C16MI		I	1/2 divider input.
	69	C8MO		O	1/2 divider output.
	70	XI		I	Crystal oscillator input.
	71	XO		O	Crystal oscillator output.
	72	DO1		O	D/A converter serial data output.
	73	$V_{SS}1$		I	GND terminal.
	74	DSCK		O	D/A converter data shift clock output.
	75	LRCK		O	D/A converter left/right clock output.
	76	DO2		O	Dual D/A converter serial data output.
	77	WDCK		O	D/A converter word clock.
	78	DLRCK		O	D/A converter left/right clock output.
	79	APTL		O	D/A converter deglitch clock L.
	80	APTR		O	D/A converter deglitch clock R.
IC202	1	$\overline{OE}$		I	Output enable input.
	2	DQ1		I/O	Data I/O.
	3	DQ2		I/O	Data I/O.
	4	$\overline{W}$		I	Write control input.
	5	$\overline{RAS}$		I	Row address strobe input.
	6	A6		I	Address input.
	7	A5		I	Address input.
	8	A4		I	Address input.
	9	Vcc		—	Power supply (5V).
	10	A7		I	Address input (row address only).

IC number	Terminal number	Port name	Terminal code	I/O	Outline of functions
IC202	11	A3		I	Address input.
	12	A2		I	Address input.
	13	A1		I	Address input.
	14	A0		I	Address input (row address only)
	15	DQ3		I/O	Data I/O.
	16	CAS		I	Column address strobe input.
	17	DQ4		I/O	Data I/O.
	18	Vss		—	Power supply (0V).
IC203	1	VSENCE1			
	2	OUT1		O	Output terminal 1.
	3	-VIN1		I	Negative power supply.
	4	+VIN1		I	Positive input 2.
	5	V_{EE}			Negative input 2.
	6	+VIN2		I	Positive power supply.
	7	-VIN2		I	Negative input 2.
	8	OUT2		O	Output terminal 2.
	9	VSENCE2			
	10	Vcc			Positive power supply.
IC401	1	Vcc			Positive power supply.
	2	$P6_5$		I/O	
	3	$P6_4$		I/O	
	4	$P6_3$		I/O	
	5	$P6_2$		I/O	
	6	$P6_1$		I/O	
	7	$P6_0$		I/O	
	8	$P2_7$	I/O port	I/O	Disc tray open direction driving output.
	9	$P2_6$	I/O port	I/O	Disc tray close direction driving output.
	10	$P2_5$	I/O port	I/O	
	11	$P2_4$	I/O port	I/O	Serial data output.
	12	$P2_3$	I/O port	I/O	Serial data output.
	13	$P2_2$	I/O port	I/O	Data latch clock output.

IC number	Terminal number	Port name	Terminal code	I/O	Outline of functions
	14	$P2_1$	I/O port	I/O	
	15	$P2_0$	I/O port	I/O	
	16	$P3_7$	OUT PORT	O	Display output i.
	17	$P3_6$	OUT PORT	O	Display output g.
	18	$P3_5$	OUT PORT	O	Display output f.
	19	$P3_4$	OUT PORT	O	Display output e.
	20	$P3_3$	OUT PORT	O	Display output d.
	21	$P3_2$	OUT PORT	O	Display output c.
	22	$P3_1$	OUT PORT	O	Display output b.
	23	$P3_0$	OUT PORT	O	Display output a.
	24	$P5_3$			
	25	$P5_2$			
	26	CNVss			Usually connected to Vss.
	27	$\overline{\text{RESET}}$		I	Reset input.
IC401	28	XIN	CLOCK IN	I	Clock input.
	29	XOUT	CLOCK OUT	O	Clock output.
	30	XCIN	CLOCK IN	I	Serial data input.
	31	XCOUT	CLOCK OUT	O	Clock output.
	32	Vss			Power Supply.
	33	Ø		O	Timing output.
	34	$P5_7$			
	35	$P5_6$			
	36	$P5_5$			
	37	$P5_4$			
	38	VP		I	Pull down voltage input.
	39	$P5_1$			
	40	$P5_0$			
	41	$P1_7$	OUT PORT	O	Laser diode control output.
	42	$P1_6$	OUT PORT	O	Display output 7.
	43	$P1_5$	OUT PORT	O	Display output 6.
	44	$P1_4$	OUT PORT	O	Display output 5.

IC number	Terminal number	Port name	Terminal code	I/O	Outline of functions
IC401	45	$P1_3$	OUT PORT	O	Display output 4.
	46	$P1_2$	OUT PORT	O	Display output 3.
	47	$P1_1$	OUT PORT	O	Display output 2.
	48	$P1_0$	OUT PORT	O	Display output 1.
	49	$P0_7$	I/O port	I/O	Serial data input.
	50	$P0_6$	I/O port	I/O	Frame synchronous state output.
	51	$P0_5$	I/O port	I/O	Low disc rotate state output.
	52	$P0_4$	I/O port	I/O	Sub-code synchronous signal output.
	53	$P0_3$	I/O port	I/O	Sub-code Q check.
	54	$P0_2$	I/O port	I/O	Sub-code channel Q output.
	55	$P0_1$	I/O port	I/O	Interrupt input.
	56	$P0_0$	I/O port	I/O	
	57	$P4_7$			
	58	$P4_6$			
	59	$P4_5$			
	60	$P4_4$			
	61	$P4_3$			
	62	$P4_2$			
	63	$P4_1$			
	64	$P4_0$			
IC501	1	OUT1		O	Output terminal 1.
	2	I_{I1}		I	Negative input terminal 1 for amp. 1.
	3	I_{N1}		I	Positive input terminal 1 for amp. 1.
	4	V-			Negative power supply.
	5	I_{N2}		I	Positive input terminal 2 for amp. 2.
	6	I_{I2}		I	Negative input terminal 2 for amp. 2.
	7	OUT2		O	Output terminal 2.
	8	V+			Positive power supply.
IC701	1	MLD		I	Mi-com command load input terminal. Low level=load
	2	RSTB			Reset terminal. Low level=active
	3	IE		I	Low level=LSI format. High level=I2S format.

IC number	Terminal number	Port name	Terminal code	I/O	Outline of functions
IC701	4	TP1		O	Digital filter test output terminal 1.
	5	TP2		O	Digital filter test output terminal 2.
	6	TEST 1		I	Digital filter test signal input terminal 1. Nominal=Low level
	7	TEST 2		I	Digital filter test signal input terminal 2. Nominal=Low level
	8	NC			
	9	NC			
	10	AVDD 4			Analog power supply terminal 4. (+5V)
	11	OUTL(-)		O	L ch. negative PWM output terminal.
	12	AVSS 4			Analog ground terminal 4.
	13	AVSS 3			Analog ground terminal 3.
	14	OUTL(+)		O	L ch. positive PWM output terminal.
	15	AVDD 3			Analog power supply terminal 3. (+5V)
	16	NC			
	17	AVDD 2			Analog power supply terminal 2. (+5V)
	18	OUTR(+)		O	R ch. positive PWM output terminal.
	19	AVSS 2			Analog ground terminal 2.
	20	AVSS 1			Analog ground terminal 1.
	21	OUTR(-)		O	R ch. negative PWM output terminal.
	22	AVDD 1			Analog power supply terminal 1. (+5V)
	23	DVDD 1			Digital power supply terminal 1 for oscillator. (+5V)
	24	DVSS 1			Digital ground terminal 1 for oscillator.
	25	X2			Crystal oscillator.
	26	X1			Crystal oscillator (external clock input terminal).
	27	NC			
	28	DVDD 2			Digital power supply terminal 2. (+5V)
	29	DVSS 2			Digital ground terminal 2.
	30	NSUB			Connect to the D-VDD terminal.
	31	ZFLGB		O	Zero signal detect output terminal.
	32	192FS		O	Clock output. 8.4672MHz
	33	LRPOL			Polarity (L ch. and R ch.) serect terminal. L level=R H level=L
	34	LRCLK		I	LRCLK input terminal.
	35	BCLK		I	Serial input bit clock.

IC number	Terminal number	Port name	Terminal code	I/O	Outline of functions
IC701	36	SRDATA		I	Serial data input terminal.
	37	DVSS 3			Digital ground terminal 3.
	38	DVDD			Digital power supply terminal. (+5V)
	39	384FS		O	Clock output. 16.9344MHz
	40	PD			Power down terminal. High level=active
	41	MDATA		I	Mi-com command data input terminal.
	42	MCLK		I	Clock input terminal for mi-com command.
IC801	1	1Y		O	Output terminal 1.
	2	1A		I	Input terminal 1.
	3	1B		I	Input terminal 1.
	4	2Y		O	Output terminal 2.
	5	2A		I	Input terminal 2.
	6	2B		I	Input terminal 2.
	7	GND			Ground terminal.
	8	3A		I	Input terminal 3.
	9	3B		I	Input terminal 3.
	10	3Y		O	Output terminal 3.
	11	4A		I	Input terminal 4.
	12	4B		I	Input terminal 4.
	13	4Y		O	Output terminal 4.
	14	Vcc			Power supply terminal.
IC901	1	GND			Ground terminal
	2	VOUT1			Output terminal 1
	3	VZ1			Capacitor connecting terminal
	4	VR			Voltage control terminal
	5	FIN			Operating control terminal
	6	RIN			Operating control terminal
	7	VCC1			Power supply terminal 1
	8	VCC2			Power supply terminal 2
	9	VZ2			Capacitor connecting terminal
	10	VOUT2			Output terminal 2

CIRCUIT DESCRIPTION

1. APC CIRCUIT

A semiconductor laser is used as the light source for the optical pickup. As the output from the semiconductor laser changes radically with changes in temperature, a circuit must be provided to stabilize this output. For this purpose, a monitor diode which detects the optical output of the laser diode is used in the semiconductor laser.
As the laser diode emits light from its bonded surface, light is emitted both in front and behind. The light emitted behind is monitored with the monitor diode installed on its rear surface, and the optical output is thus controlled. The light emitted in front becomes the light source for the pickup.

Fig. 1 shows the APC circuit.
When the temperature rises and the optical output decreases, the monitor diode current (IS) decreases, the electric potential of IC101 pin 5 rises, the base current of the driving transistor increases, and the laser diode current increases. This causes the reduced optical output to return to its former level.

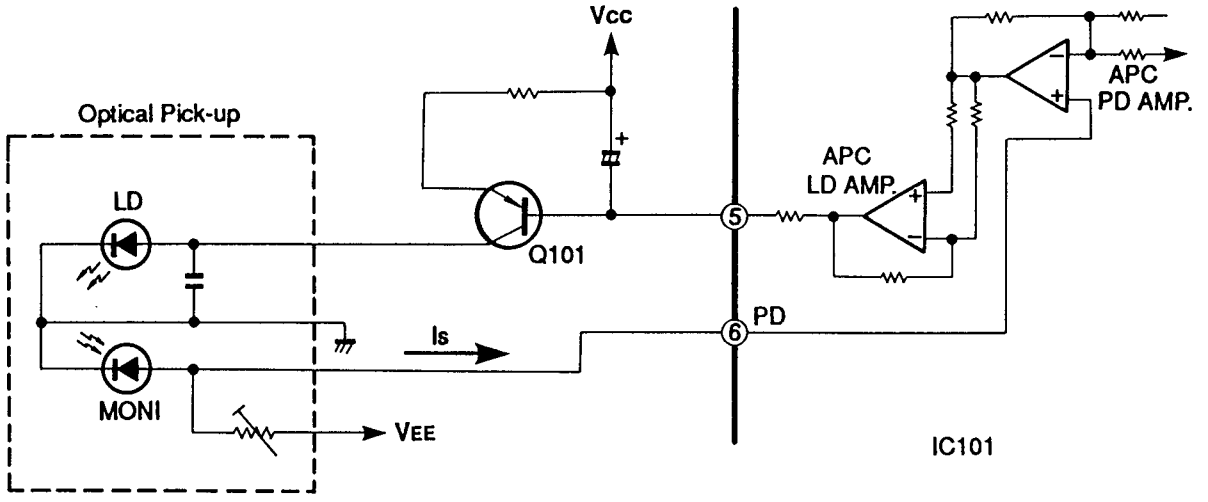

Fig. 1

2. FOCUS SERVO

2-1. Optical pickup

This set employs a three-beam optical pickup comprised of six division photodiodes, A through F as shown in Fig. 2. The four photodiodes (A through D) at the center provide focus error detection by using their property to allow the beam to focus into a round image only at a certain point.
The sums of outputs from diagonal two elements of four division photodiodes (A+C and B+D) are compared by the differential amplifier in IC101 to detect the shape of the beam image.
The remaining two diodes (E and F) provide tracking error detection by means of sub-beam spots.

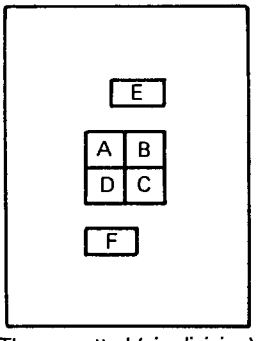

Three spotted (six-division) photo diodes

Fig. 2

2-2. Focus error detecting operation

The reflected laser beam from a disc is polarized 90° with the beam-splitter and sent to the cylindrical lens. The beam passed through this cylindrical lens is then sent to the four division photodiodes and focuses into an image whose shape varies with the distance between the disc and the objective lens. Such change in the beam shape causes the current flowing from the photodiodes to vary .

Shown in Fig. 3 is the principle of the focus error detection.
The currents from the photodiodes (A+C and B+D) are applied to pins 7 and 8 of IC101 and converted to voltage by RF I-V amplifiers (1) and (2) included in IC101.

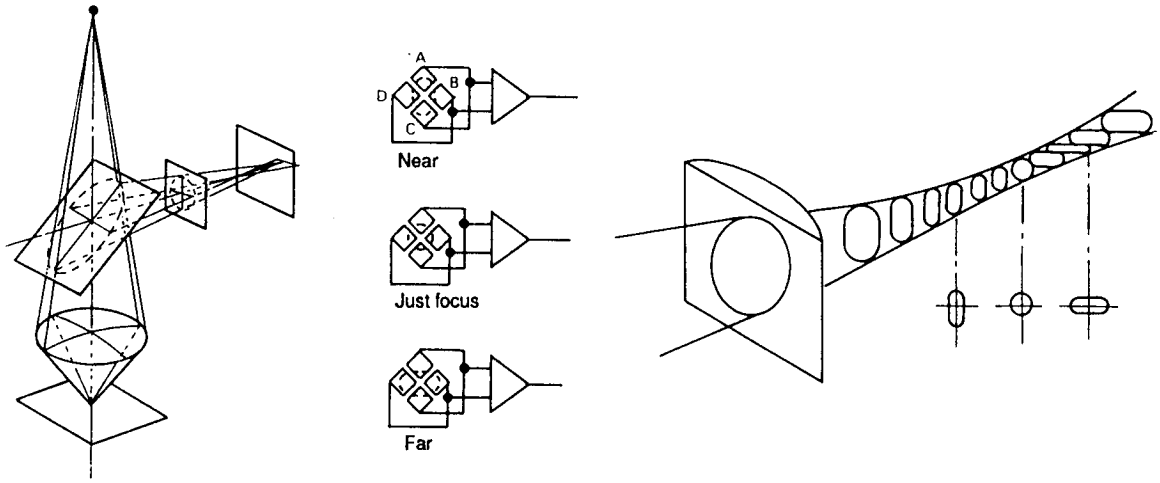

Fig.3

2-3. Focus servo control operation

The focus error signal, after begin converted to voltage by the RF I-V amplifier, is transmitted to the operation amplifier in the IC and output from pin 19.

When the disc to objective lens distance is in just focus, the beam forms a true round. In this state, the beams applied to four elements of four division photodiodes become equal and thus the output provided then is 0(zero). When the disc to objective lens distance is too close (near focus), the beam is reflected divergently to form an oval in crosswise direction. In this state, the outputs provided from photodiodes A and C are higher than those from B and D, resulting in negative (-) output voltage. On the other hand, when the distance is too far (far focus), the beam is reflectd convergently to form an oval in longitudinal direction. Then the outputs from photodiodes B and D are higher, resulting in positive (+) output.

The output voltage(focus error signal) from pin 19 of IC101 passes through IC102 , in from pin 32 and out from pin 30, and IC103, in from pin 7 out from pin 9 as shown in Fig. 4. It is amplified in each IC and fed to the focus coil which then drives the objective lens of the pickup.

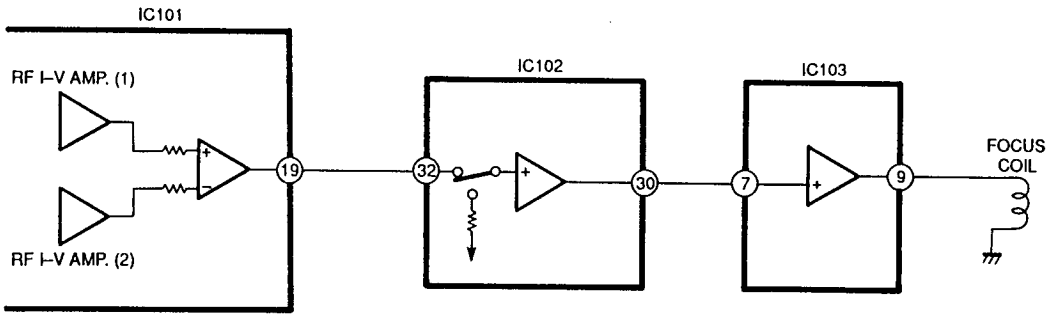

Fig. 4

2-4. Tracking error detection system

Fig. 5 shows the principle of the tracking error detection system which employs the three beam system.

The laser beam is divided into the main beam and two sub-beams by diffraction grating and they are arranged on one line. The center line connecting these three beams has a slight offset angle against the main beam. The main beam is received by photodiodes A, B, C and D and two sub-beams by E and F respectively.

Fig. 5-A shows the on-track state. As both auxiliary beams 1 and 2 are slightly on the track in this state, the outputs of photodiodes E and F are equal and the tracking signal is 0(zero). When the track is shifted to the left (Fig. 5-B), the auxiliary beam 1 is off the pit. This allows more light to be received by the photodiode E, resulting in positive (+) tracking signal output. On the other hand, when the track is shifted to the right (Fig. 5-C), the amount of light received by the photodiode F increases, resulting in negative (-) tracking signal output. And these extreme signals are detected as tracking error signals.

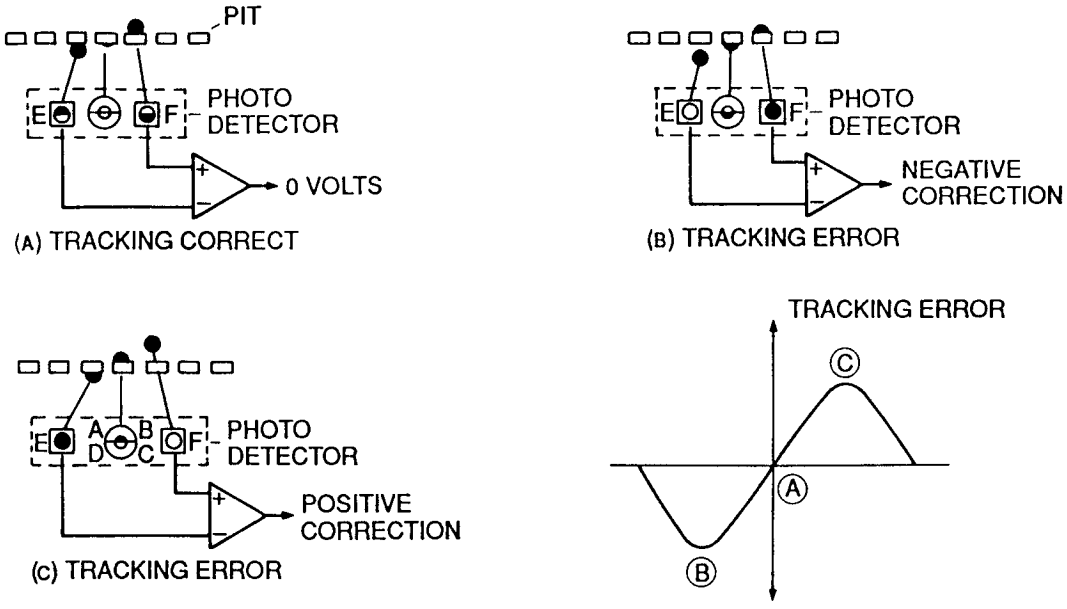

Fig. 5

2-5. Tracking servo control operation

When a tracking error signal is detected by photodiodes E and F, it is fed to pins 11 and 10 of IC101 respectively as shown in Fig. 6. In IC101, the signal is converted into voltage by the E I-V amplifier and F I-V amplifier, transmitted to the tracking error amplifier and output through pin 20. While it passes through IC102, in from pin 1 and out from pin 22, and IC103, in from pin 6 and out from 4, it is amplified in each IC and sent to the tracking coil to adjust pickup so that the amount of track shift is reduced as closely to none as possible.

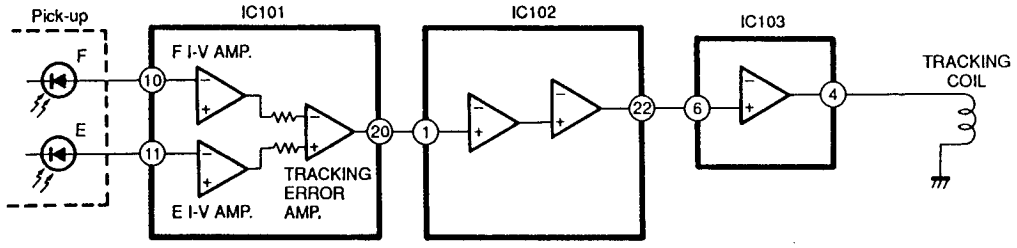

Fig. 6

3. Regenerative Circuit

3-1. RF circuit

The currents from photodiodes (a, b, c and d) are fed to IC101 through pins 7 and 8 and converted to voltage by RF I-V amplifiers (1) and (2) respectively there, added by the RF summing amplifier and output from pin 2 as a signal. As it is sent to pin 7 of IC201, it can be checked at the test point (TP201) provided on its way by means of the eye pattern check.

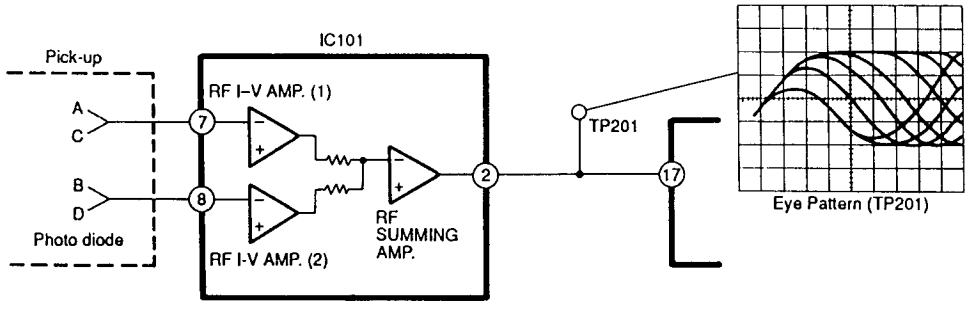

Fig. 7

3-2. EFM demodulation, error correction, serial/parallel conversion

EFM demodulation, error correction and serial/parallel conversion are performed by the internal circuitry of IC201. The eye-pattern signals from pin 2 of IC101 are sent to pin 17 of IC201, then demodulated from 14 bits to 8 bits by EFM readjustment. At the same time any error, if found, is corrected (CIRC) and the signals are sent to the D/A converter interface. After that, they are output as 18-bit digital signals from pins 72, 74 and 75 of IC201 and fed to the D/A converter of IC701.

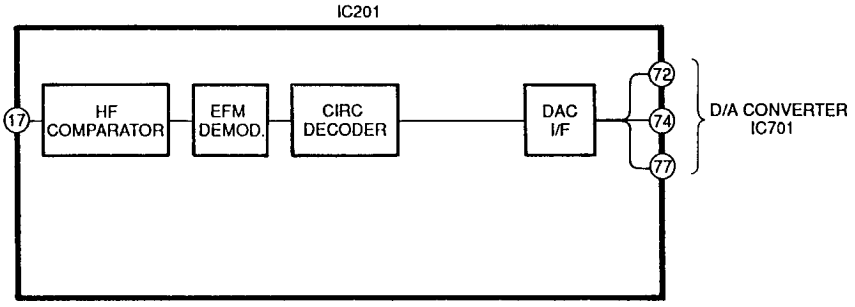

Fig. 8

4. 1-bit D/A Converter

Conventionally, high-precision D/A conversion was mainly carried out using resistor ladder systems. There was, however, one main drawback with these systems, which was that zero cross distortion was likely to be generated. To achieve production of a high-precision D/A converter with a minimum amount of zero cross distortion, it would be necessary to carry out complicated and bothersome processes such as laser trimming processing. In addition, use of such D/A converter would require a sampling-and-hold circuits(or de-glitcher circuit) and an intricate analog filter with special characteristics when mounting it.
To solve these difficulties, we used a 1-bit D/A converter with 3rd order noise shaping technology (IC701: MN 6471M).

4-1. Features and Configuration of MN6471M

Features
1. No zero cross distortion
2. No non linear distortion
3. Built-in 4 times oversampling digital filter
4. 2 channels (left and right) built in
5. 4DAC configuration possible
6. Single 5V power supply operation

The block diagram is shown in Fig. 9. The MN6471M is configured of a digital filter, a 3rd order noise shaping circuit, and a PWM.

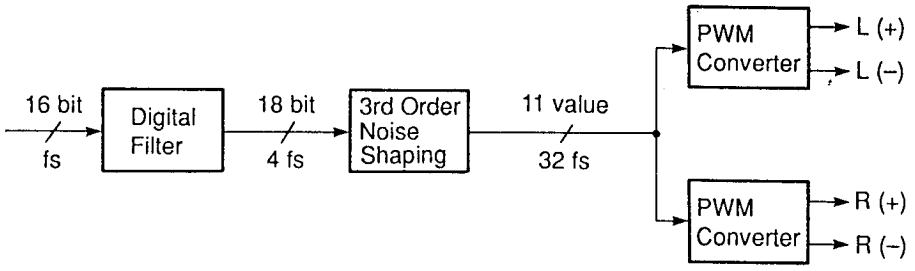

Fig. 9

4-2. Configuration of MN6471M

Fig. 10 shows the configuration of the MN6471M. The sampling frequency of the input data is expressed in fs, so the 3rd order noise shaping circuit operates at 32fs. This means that a 32-times oversampling filter is required. In this LSI, however, oversampling is carried out first at 4fs in the first digital filter, and following that, a 0 order hold takes place in the 3rd order noise shaping circuit. This enables conversion of the 4fs signal to a 32fs signal.

The digital filter, using 384fs as clock signals, and the noise shaping section, uses 64fs, carry out time division processing on the data for the left and right channels. The PWM section, using 768fs as a clock signal, carries out signal processing for the left and right channels independently.

In the noise shaping section, the 19-bit 32fs signal is converted to 11 values and pulse width modulation (PWM) in carried out on these signals in the PWM section. D/A conversion is carried out in this way.
Following are the descriptions of the various blocks.

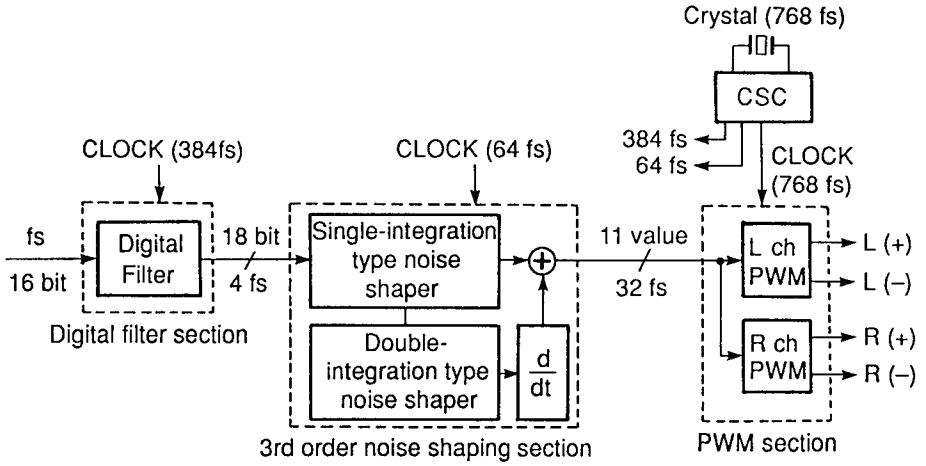

Fig. 10

5. Digital filter

Fig. 11 shows the signal data of an audio signal up to 20kHz that has been digitalized, along with the frequency distribution of the signal data. The graphs show the conditions for a sampling frequency of 44.1kHz, plus its doubled frequency, 88.2kHz, and its quadrupled frequency, 176.4kHz.

As the figure shows, for the same signal up to 20kHz, the noise portion of the digitalized signal component tends to shift toward the higher range of the signal if the sampling frequency is increased. However, at any sampling frequency, the volume of necessary audio signal information remains constant up to 20kHz. This allows certain important results to be derived; that is, if the information represented in section (a) is obtained, then it should be possible to create a signal in the form shown in (b) or (c).

When the noise caused by sampling shifts to the higher frequency range, as shown in (b) or (c), the low pass filter characteristic to eliminate noise during re-conversion to an audio signal need not be steep but can be rather gradual as shown. It is comparatively simple to provide a high audio quality low pass filter of such characteristic with little phase fluctuation or distortion.

The question now becomes how to make a signal sampled at 44.1kHz resemble one sampled at a much higher frequency. Fig. 12 shows the signal sequence sampled at the same 44.1kHz as in Fig. 11 and its frequency distribution.

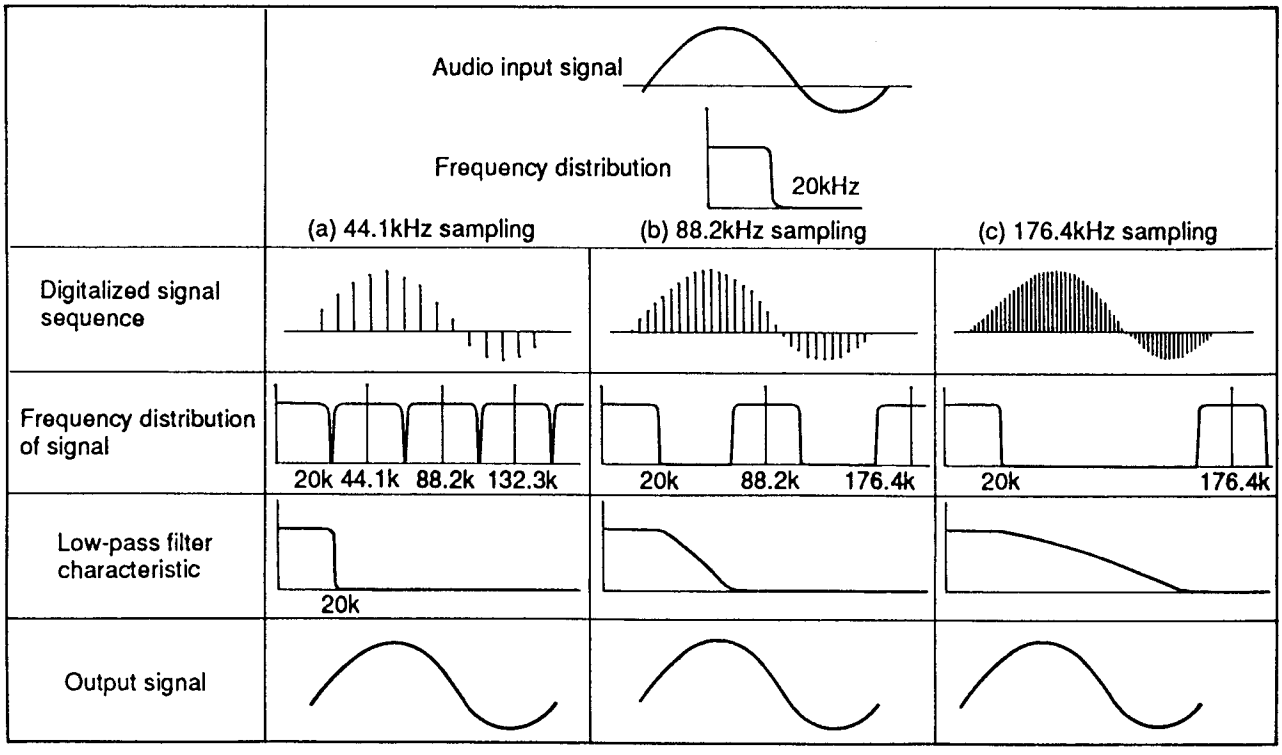

Fig. 11

If the frequency is to be doubled as the first step in increasing the sampling frequency of the signal, zero-level data is added between the data marked with **X** in Fig. 12(b). In the original signal sequence sampled at 44.1kHz, there are data only at the points of the sampling timing, while the intervals between those points have all been made zero-level. Introducing zero data in these intervals does not change the original data in any way, nor is the frequency distribution altered. Only the sampling frequency is doubled.

Passing this data in its modified form through a digital filter with the characteristic shown in Fig.12(c) causes the portion corresponding to N1 to be eliminated, resulting in a signal sequence with the frequency distribution shown in (d). This signal sequence possesses exactly the same shape as that obtained for the signal in Fig. 11(b), sampled at 88.2kHz.

In other words, this method enables the sampling frequency to be doubled.

The digital filter used in this unit is a Finite Inpulse Response type. Its circuit diagram is shown in Fig. 13.

The sampling frequency of this unit has been quadrupled, and the phase characteristic has been improved by using a softer analog low-pass filter.

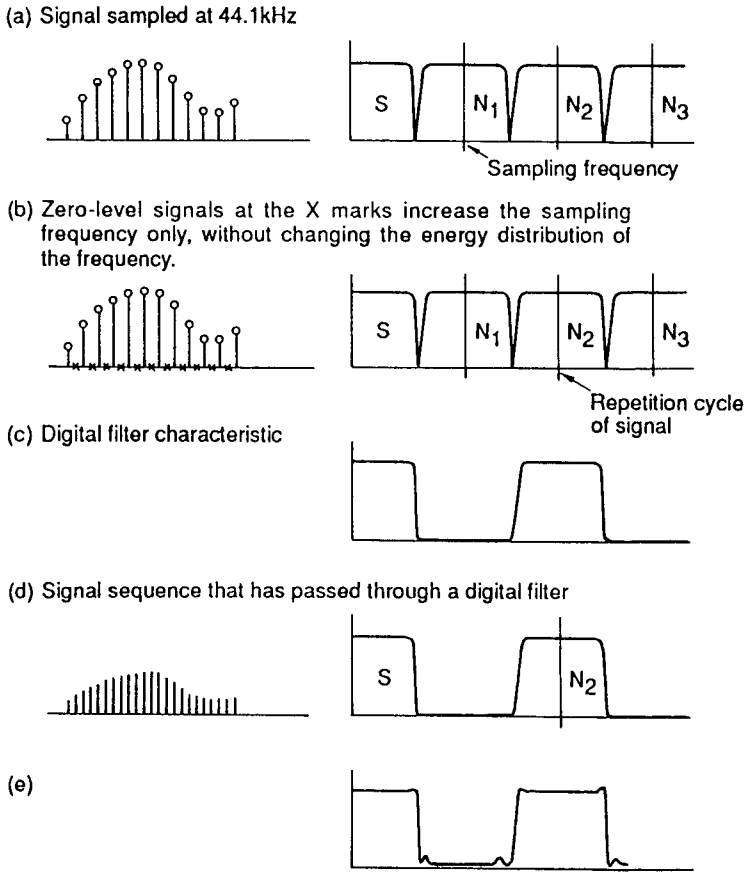

Fig. 12

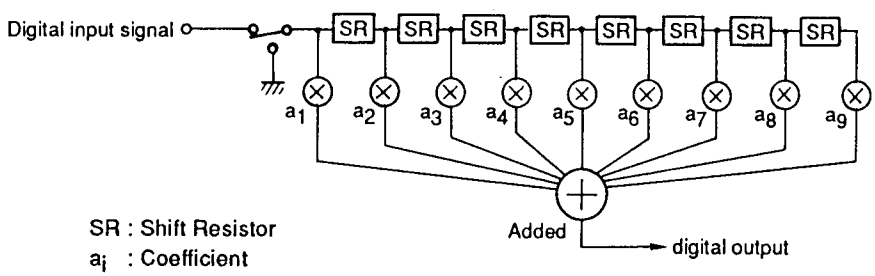

Fig. 13

6. Noise shaper

a) Single-integration noise shaper
The block diagram is shown in Fig. 14.

According to the figure, the relation between input X and output Y is as follows:

$Y = X + (1 - Z^{-1})\,Vq$ ..... (1)

The quantization error Vq is a random value, and $(1-Z^{-1})$ expresses the differential characteristic. Thus, according to equation (1), the spectrum of the quantization error Vq for the single-integration noise shaper has a characteristic of 6dB/oct, and the lower the frequency is, the greater the attenuation becomes. (This is because the noise distribution can be changed by the noise shaper).

b) Double-integration noise shaper
The block diagram is shown in Fig. 15.

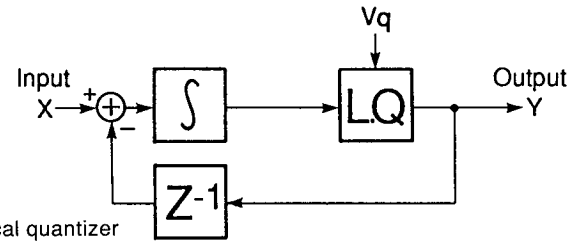

LQ : Local quantizer
Z^{-1}: Delay
Vq : Quantization error
∫ : Integrator

Fig. 14

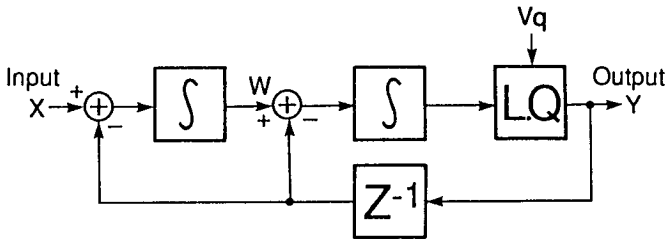

Fig.15

In Fig. 15, the path to the output seen from W has a configulation identical to that of the single-integration noise shaper, so that relation between W and Y is:

$Y = W + (1 - Z^{-1})\,Vq$ ..... (2)

The relation between X and Y is:

$$W = \frac{1}{1 - Z^{-1}}\,(X - Z^{-1}Y) \text{.....(3)}$$

And the result obtained from above equations (2) and (3) is:

$Y = X + (1 - Z^{-1})^2\,Vq$ ..... (4)

Comparison with equation (1) shows that the term $(1 - Z^{-1})$ is a square of itself. In other words, with the double-integration noise shaper, the spectrum of the quantization error Vq is attenuated at a slope of 12dB/oct.

Fig. 16 shows the output spectrum of the noise shaper.

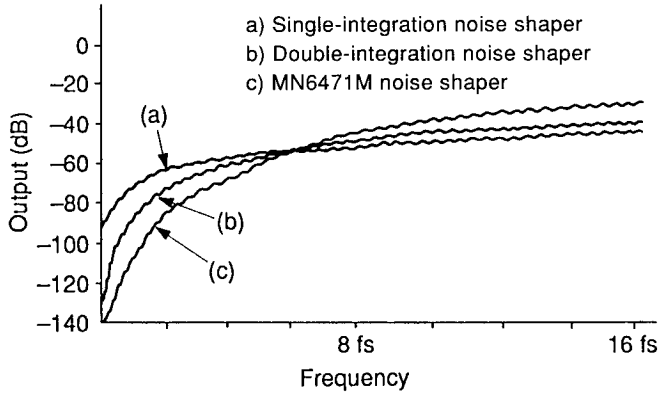

Fig. 16

6-2. 3rd order noise shaper
The block diagram of the 3rd order noise shaper is shown in Fig. 17.

This configuration shows that the first stage uses a single-integration noise shaper and the following stage uses a double-integration noise shaper. The quantization error of the first stage is input at the second stage.

In this configuration, single-integration and double-integration noise shapers are connected at several stages, and the quantization error of the previous stage is quantified again at the following stage, so that the quantization error included in the output of the previous stage is negated. In this way, compensation is carried out.

In this noise shaping circuit, the input is expressed as X, the output as Y, and the re-quantized error as Vq, and their relation for

each order is shown in the following equations.

(1st order) $Y = X + (1 - Z^{-1})\,Vq$

(2nd order) $Y = X + (1 - Z^{-1})^2\,Vq$

(3rd order) $Y = X + (1 - Z^{-1})^3\,Vq$

In noise shaping, as the order of the transfer coefficient called $(1 - Z^{-1})$ becomes larger, the noise in the 1/2 fs audio band moves higher in the frequency range. The result is that, within a narrow audio band, an 18-bit performance can be obtained even from a 1-bit DAC.

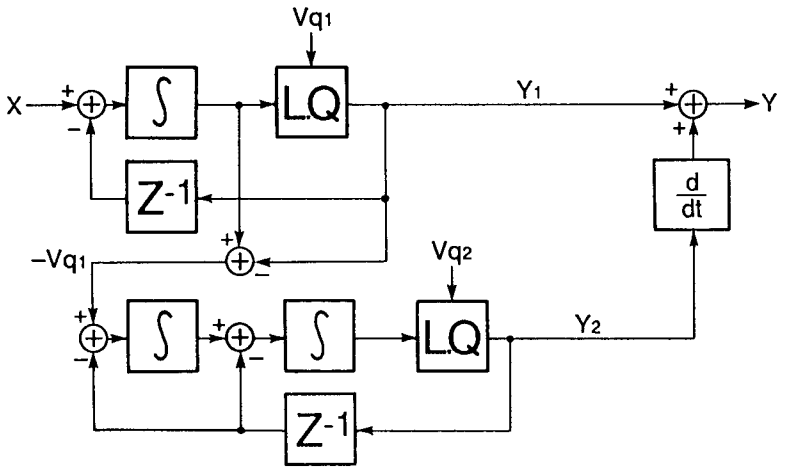

Fig. 17

$Y^1 = X + (1 - Z^{-1})\,Vq^1$ ..... (5)

$Y^2 = -Vq^1 + (1 - Z^{-1})^2\,Vq^2$ ..... (6)

$Y = Y^1 + (1 - Z^{-1})\,Y^2$ ..... (7)

The result obtained from above equations (5) ~ (7) is:

$Y = X + (1-Z^{-1})^3\,Vq^2$ ..... (8)

7. PWM Output Section

In the output from the MN6471M noise shaper, the 11 value data of the 32fs is output. In the PWM section, pulse width modulation (PWM) is carried out on that signal, enabling D/A conversion.

Fig. 18 shows the PWM section of the MN6471M.

The 11 value digital data output from the noise shaper is converted (1-bit data stream) to pulse signal with 11 pulse widths precisely controlled by the crystal OSC and output as an analog signal. In the PWM output section, signals from both left and right channels are output as differential output so that the synchronous-phase noise is eliminated and the 2nd order high-frequency distortion is reduced.

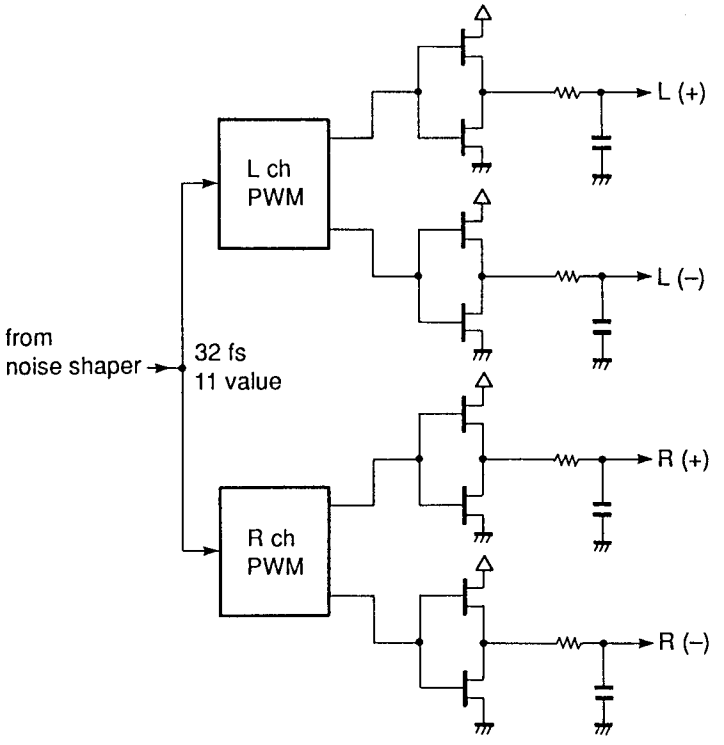

Fig. 18

8. Audio Circuit

Fig. 19 shows a block diagram of the audio circuit.

The output from pin 21 (OUT R (-)) and pin18 (OUT R (+)) of the IC701 D/A converter MN6471M passes through the buffer circuit of the discrete circuit configured of Q604, 608, and 612; and Q602, 606, and 610 respectively. It is then input to the differential input amplifier, which is symmetrical in the up and down directions, of the discrete circuit configured of the following stage, which includes Q310, 312, 302, 304, 306, 308, 314, and 316. The output undergoes differential synthesis in this circuit, and after synchronous-phase noise has been eliminated, the resulting signal is output to the low-pass filter of the discrete circuit configuration of the following stage as an audio signal with very little 2nd order high-frequency distortion. Q605 and 609 (left channel), and Q606 and 610 (right channel) are an inverted darlington buffer circuit, while Q601 (left channel) and Q602 (right channel) are a FET-controlled constant-current circuit. Q309 and 311 (left channel) and Q310 and 312 (right channel) are, similarly, a FET-controlled constant-current circuit. Fig. 20 shows the buffer circuit and the differential input amplifier (left channel only).

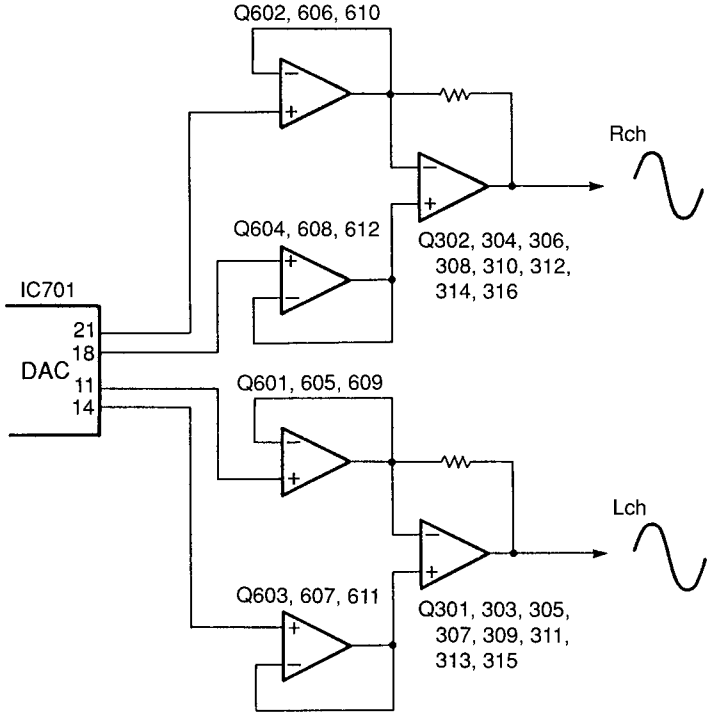

Fig. 19

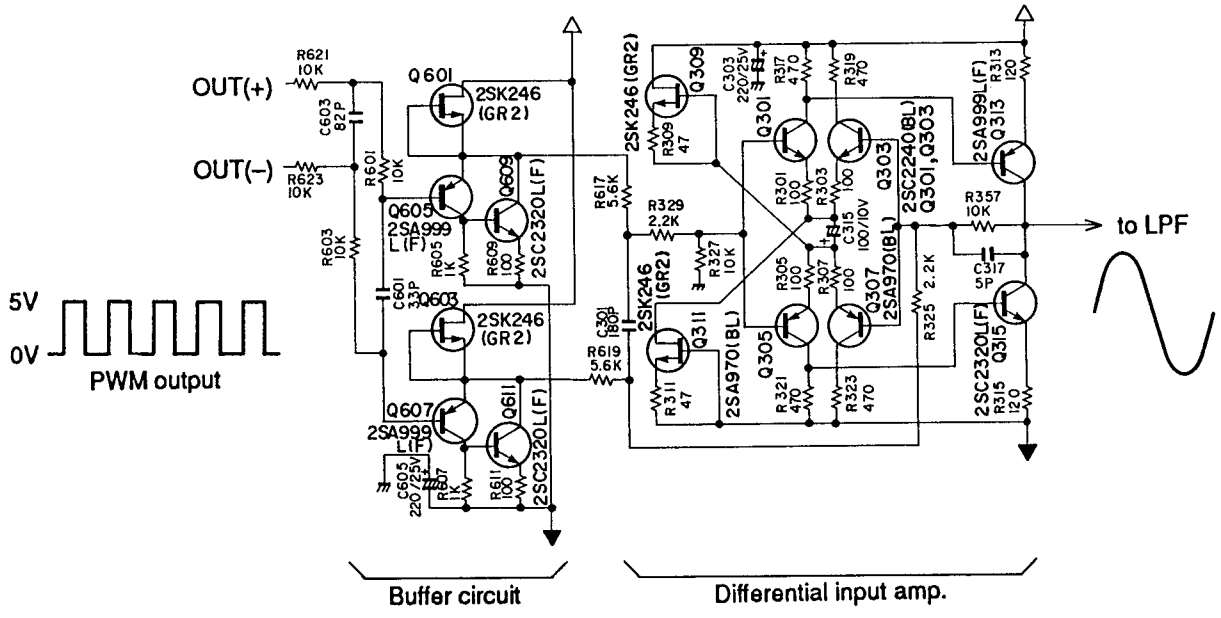

Fig. 20

9. Low-pass filter

Fig. 21 shows a final-stage circuit which includes a low-pass filter and other elements.

The emphasis data from the disc is output through the EMP terminal (pin 1) of IC201. When a disc to which emphasis is applied is played back, this terminal is set high and Q202 turns on. Following this, Q317 (left channel) and Q318 (right channel) are also turned on. Then connecting C305 (left channel) and C306 (right channel) to the ground provides the de-emphasis characteristic.

The portion of Fig. 21 enclosed by the broken line is a 3rd-order active LPF. This LPF causes noise in the high range to be cut.

Q321 and Q323 (left channel) and Q322 and Q324 (right channel) are buffer circuits of inverted darlington configuration. Q319 and Q320 are FET controlled constant current circuits.

Q325, Q326, Q51 and Q56 are power muting circuits.

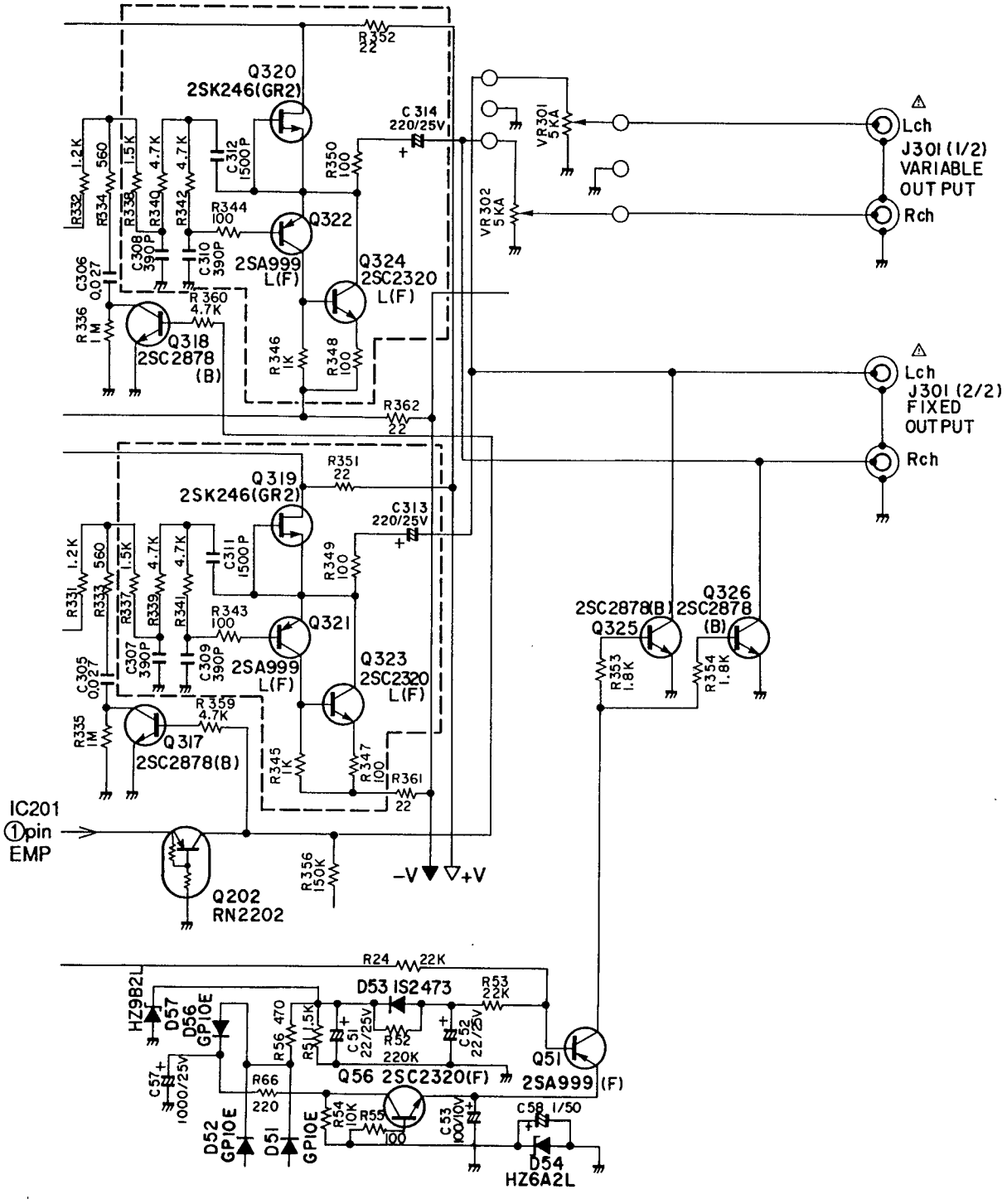

Fig. 21

IC BLOCK DIAGRAM

IC101 : CXA1081S
RF Amp.

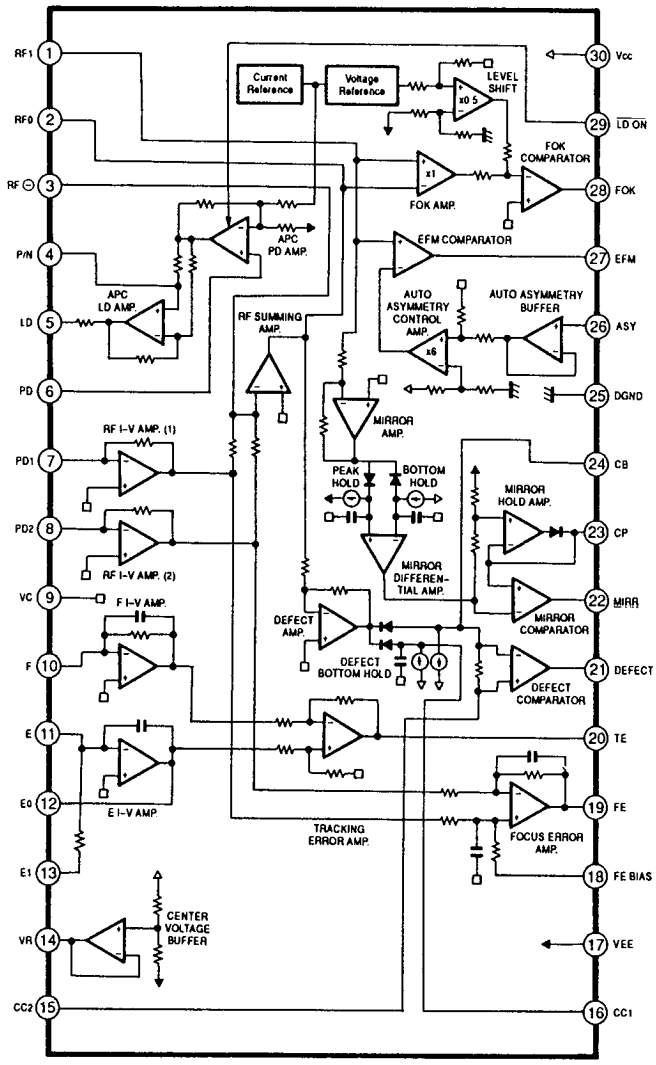

IC102
M51564P
Optical Pick-up Servo Control

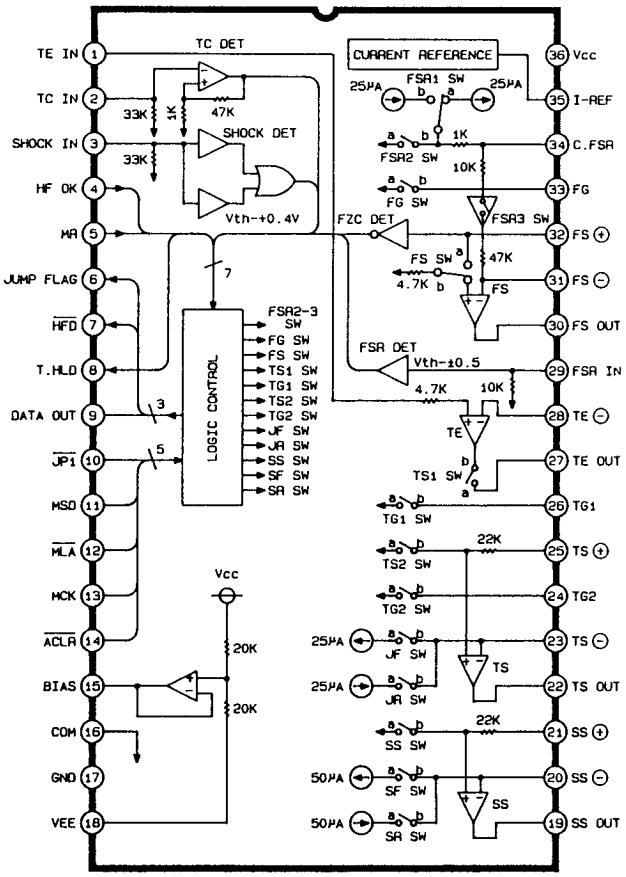

IC103 : LA6520
3 channel Power OP-Amp.

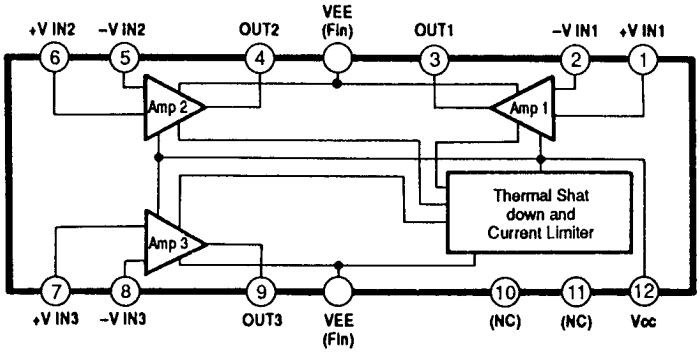

IC201 : M50423FP
Digital Signal Processor

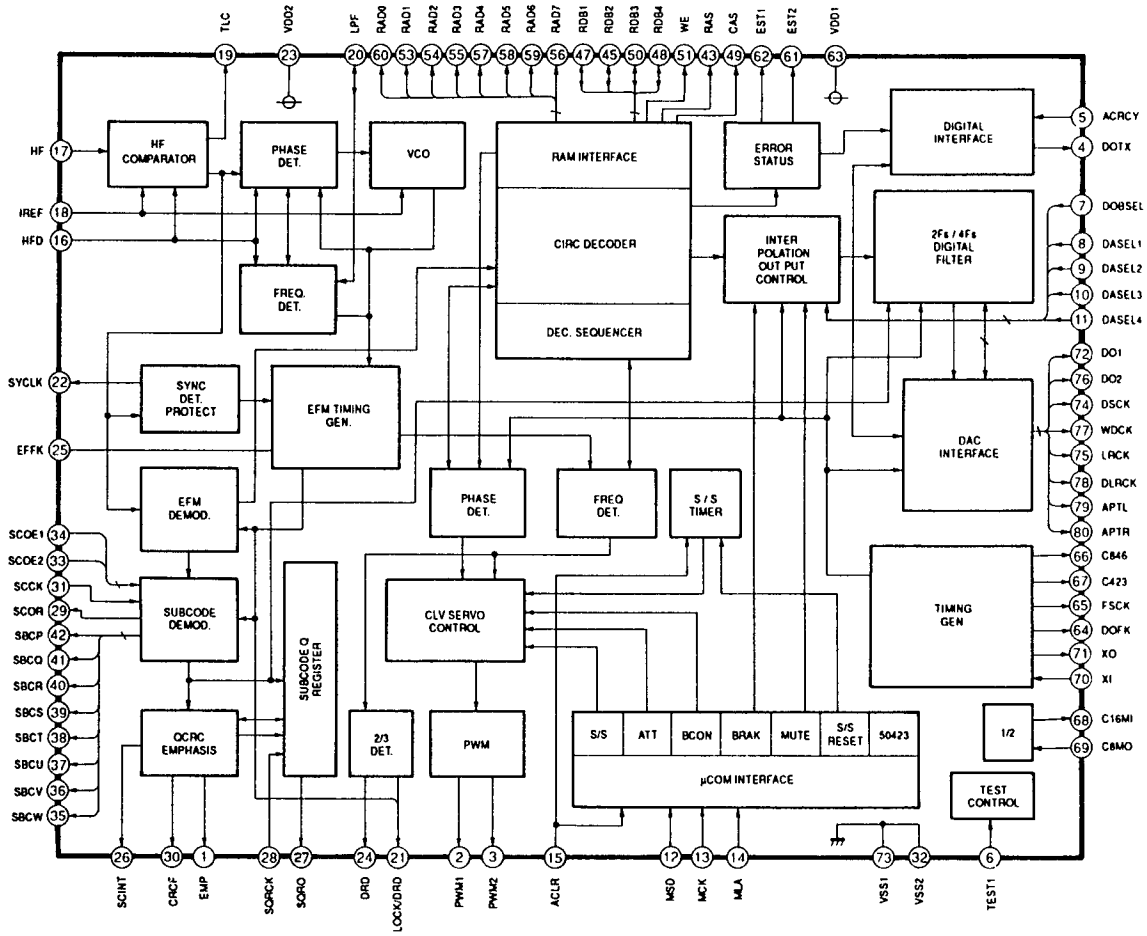

IC202
M5M4416P
65536-Bit (16384-Word by 4-Bit) Dynamic RAM

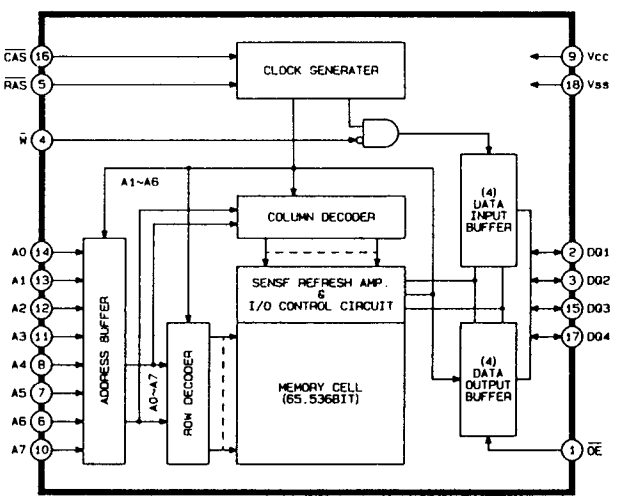

IC203 : LA6515
2 channel Power OP-Amp.

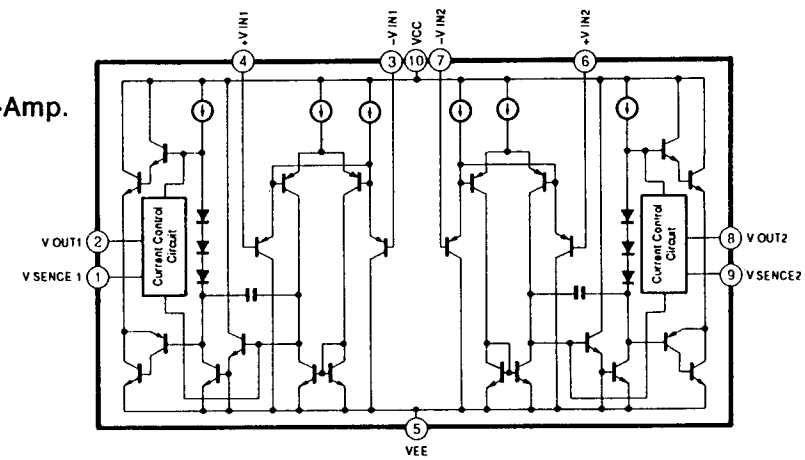

IC401 : M50957
Microcomputer

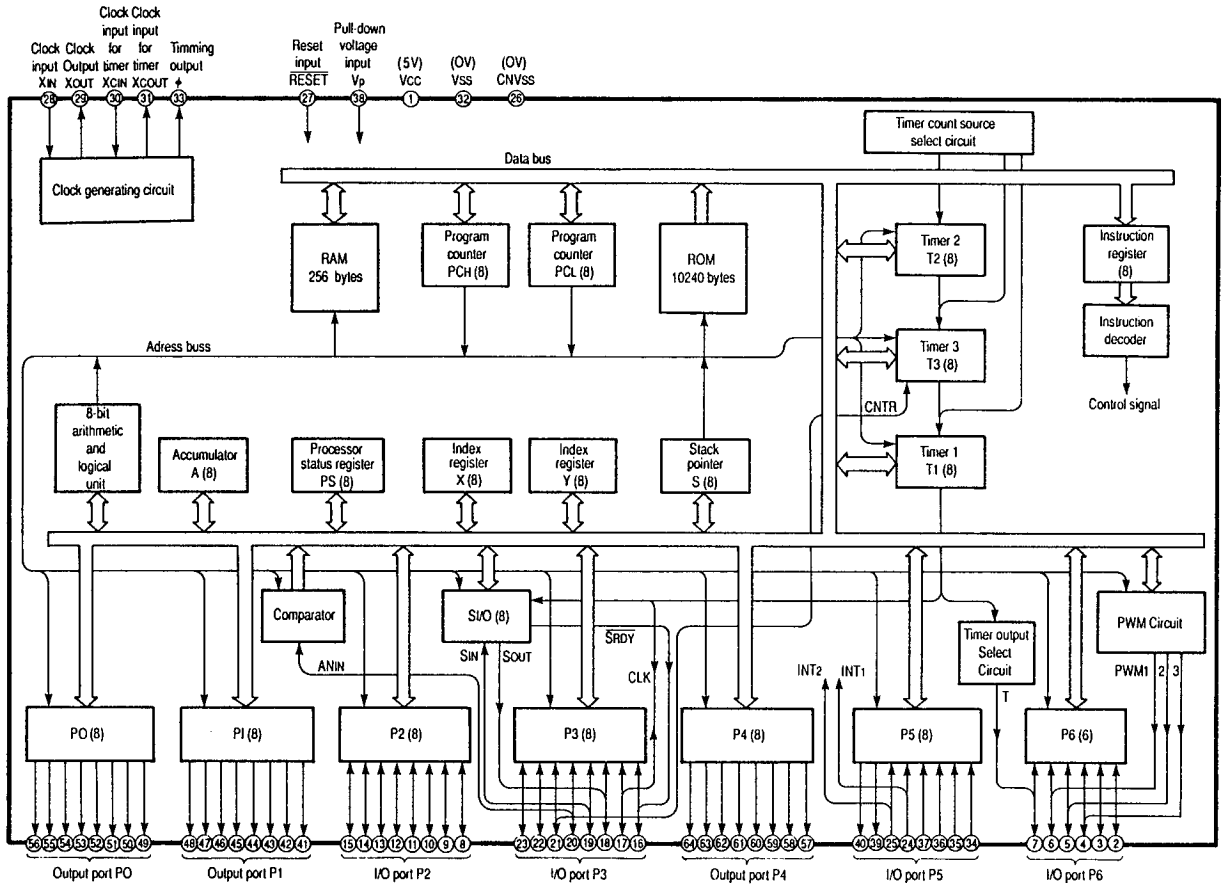

IC501 : NJM4556D
Headphone Amp.

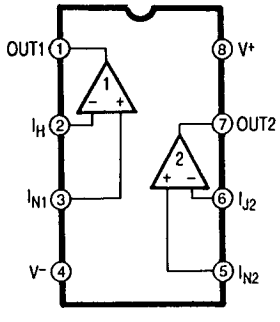

IC801 : T74HC02P
Buffer Amp.

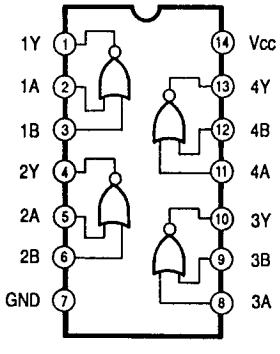

IC701 : MN6471M
Digital Filter & D/A Converter

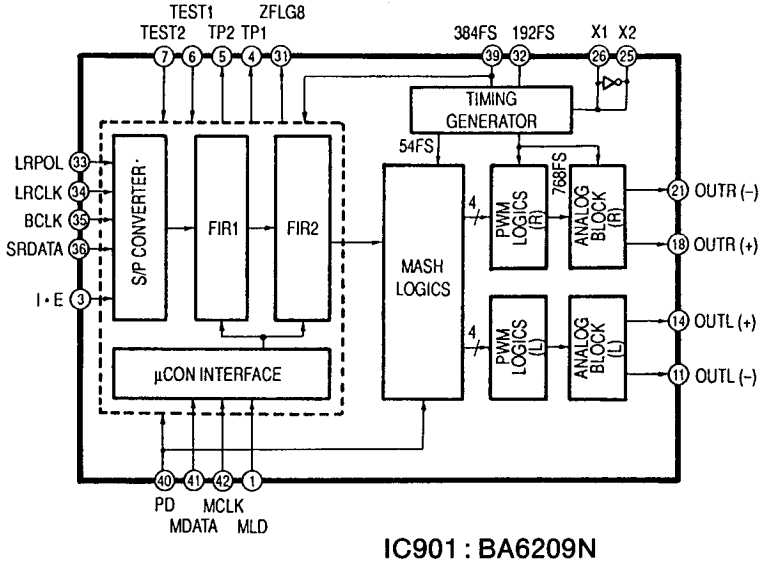

IC901 : BA6209N
Motor Driver

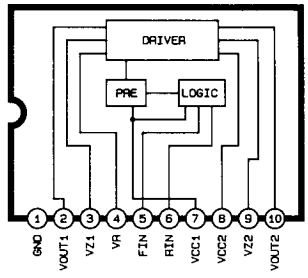

CD MECHANISM

EXPLODED VIEW

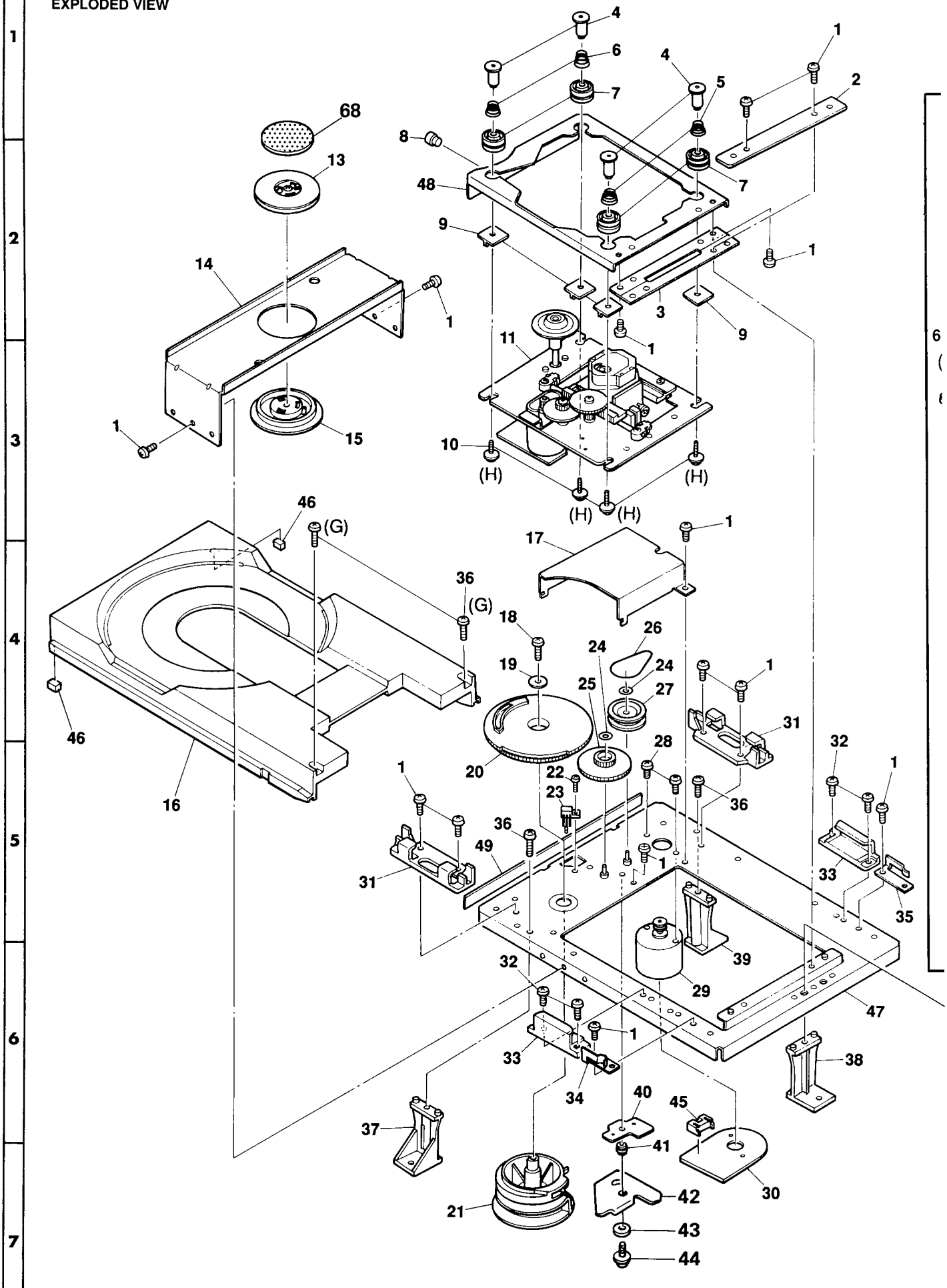

	F	G	

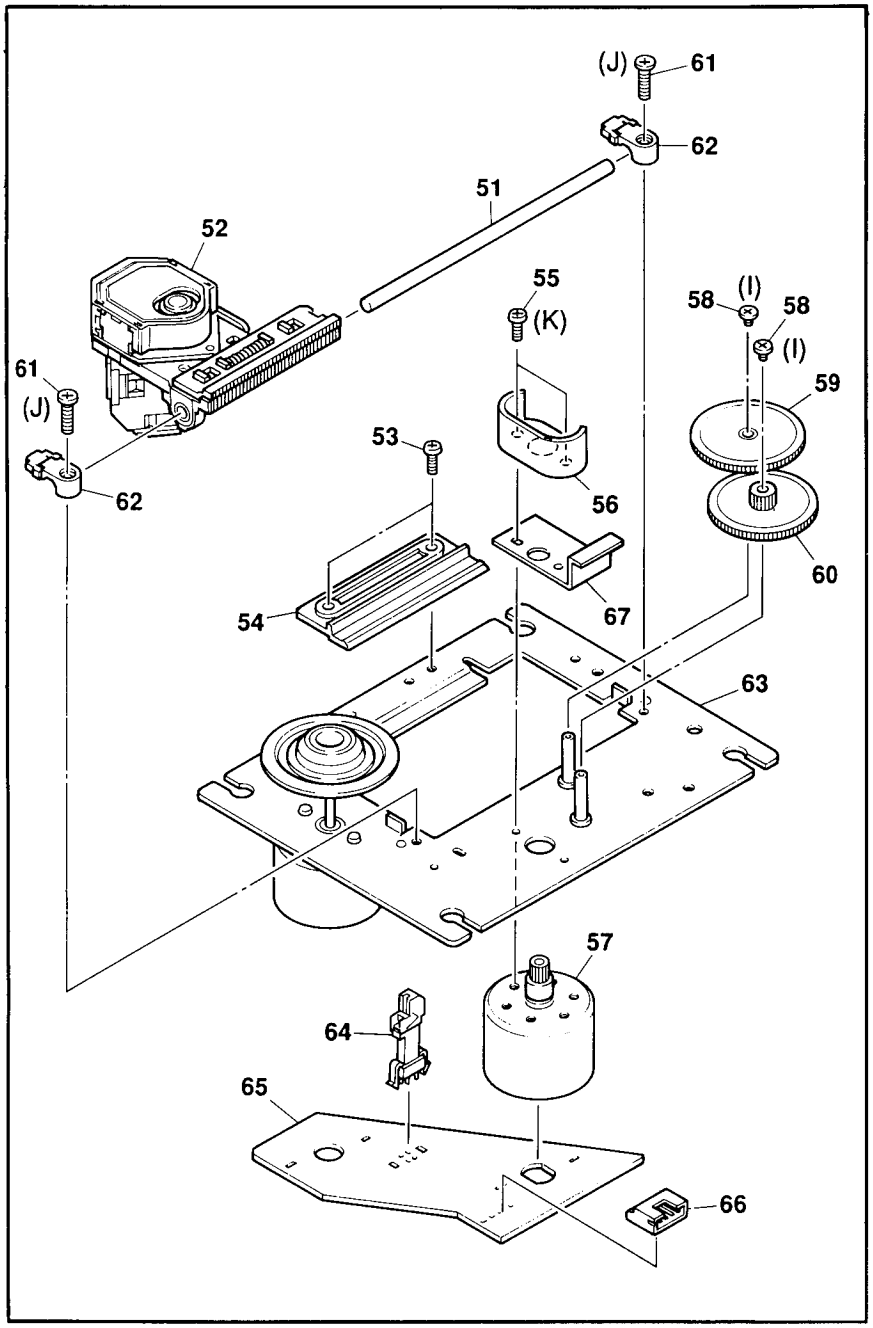

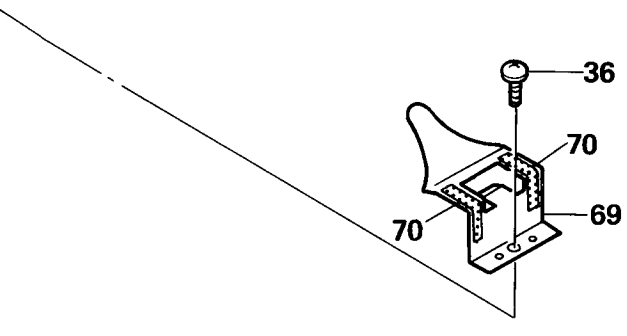

PARTS LIST

Ref. No.	Part No.	Description
1	7-685-862-(01)	SCREW (+) (2.6 x 6mm)
2	2-642-170-(01)	HINGE HOLDER
3	2-642-164-(01)	HINGE
4	2-642-160-(01)	SHAFT
5	2-642-137-(02)	COIL SPRING (B)
6	2-642-139-(02)	COIL SPRING (A)
7	2-642-158-(01)	INSULATOR (C)
8	2-642-169-(02)	ROLLER
9	2-642-159-(01)	PLATE (T)
10	2-642-142-(01)	SCREW
11	8-848-184-(01)	CD PLAYER SUB UNIT ASS'Y
13	X-2642-108-(1)	MAGNET ASS'Y
14	2-642-165-(01)	CHUCK CHASSIS
15	2-642-181-(01)	CHUCKING PULLEY
16	2-642-156-(02)	TRAY
17	2-642-149-(02)	GEAR COVER
18	7-685-535-(19)	SCREW (+) (2.6 x 10mm)
19	4-812-554-(01)	WASHER
20	2-642-154-(03)	DRIVE GEAR
21	2-642-153-(01)	CONTROL CAM
22	7-685-851-(01)	SCREW (+) (2 x 4mm)
23	1-572-052-(11)	LEAF SWITCH
24	3-558-708-(21)	LOCK WASHER
25	2-642-148-(01)	CENTER GEAR
26	3-653-387-(01)	LM BELT
27	4-913-731-(01)	LOADING PULLEY
28	7-621-775-(00)	SCREW (+) (2.6 x 3mm)
29	X-2641-336-(1)	MOTOR ASS'Y
30	1-624-793-(21)	MOTOR P.C. BOARD
31	2-642-161-(01)	TRAY HOLDER, FRONT
32	7-685-781-(01)	SCREW (+) (2 x 4mm)
33	2-642-162-(03)	TRAY HOLDER, REAR
34	2-642-146-(02)	TRAY GUIDE, RIGHT
35	2-642-147-(02)	TRAY GUIDE, LEFT
36	7-685-547-(19)	SCREW (+) (3 x 10mm)
37	2-642-510-(01)	HOLDER, RIGHT
38	2-642-512-(01)	HOLDER, REAR
39	2-642-511-(01)	HOLDER, LEFT
40	2-642-173-(01)	LINK PLATE
41	2-642-133-(02)	BOSS
42	X-2642-109-(1)	STOPPER LINK ASS'Y
43	2-642-172-(01)	SPACER
44	7-682-902-(31)	SCREW (+) (2.6 x 8mm)
45	1-564-721-(11)	CONNECTOR, 5 PIN
46	2-642-125-(01)	DAMPER
47	X-2642-106-(2)	MAIN CHASSIS ASS'Y
48	X-2642-105-(2)	SUB CHASSIS ASS'Y
49	2-642-157-(03)	FRONT TAPE
51	4-910-431-(02)	SLIDE SHAFT
52	8-848-127-(31)	PICK-UP ASS'Y
53	2-641-386-(01)	SPECIAL SCREW (2 x 5mm)
54	2-641-443-(02)	SLIDE HOLDER
55	7-621-255-(35)	SCREW (+) (2 x 5mm)
56	2-641-434-(01)	GEAR COVER
57	X-2641-358-(1)	SLIDE MOTOR ASS'Y
58	3-303-809-(31)	SPECIAL SCREW (M1.7 x 3mm)
59	2-641-404-(02)	GEAR (A)
60	2-641-403-(06)	GEAR (B)
61	2-641-447-(01)	SCREW (+) (2.6 x 8mm)
62	2-641-448-(02)	SHAFT CLAMP
63	X-2641-356-(1)	DISC MOTOR ASS'Y
64	1-570-053-(12)	LEAF SWITCH
65	1-628-263-(11)	MOTOR P.C. BOARD
66	1-564-720-(11)	CONNECTOR, 4 PIN
67	2-641-371-(01)	STOPPER
68	2111-1422	FELT
69	2652-124	LEAF SPRING
70	2111-11771	FELT

GENERAL UNIT
EXPLODED VIEW

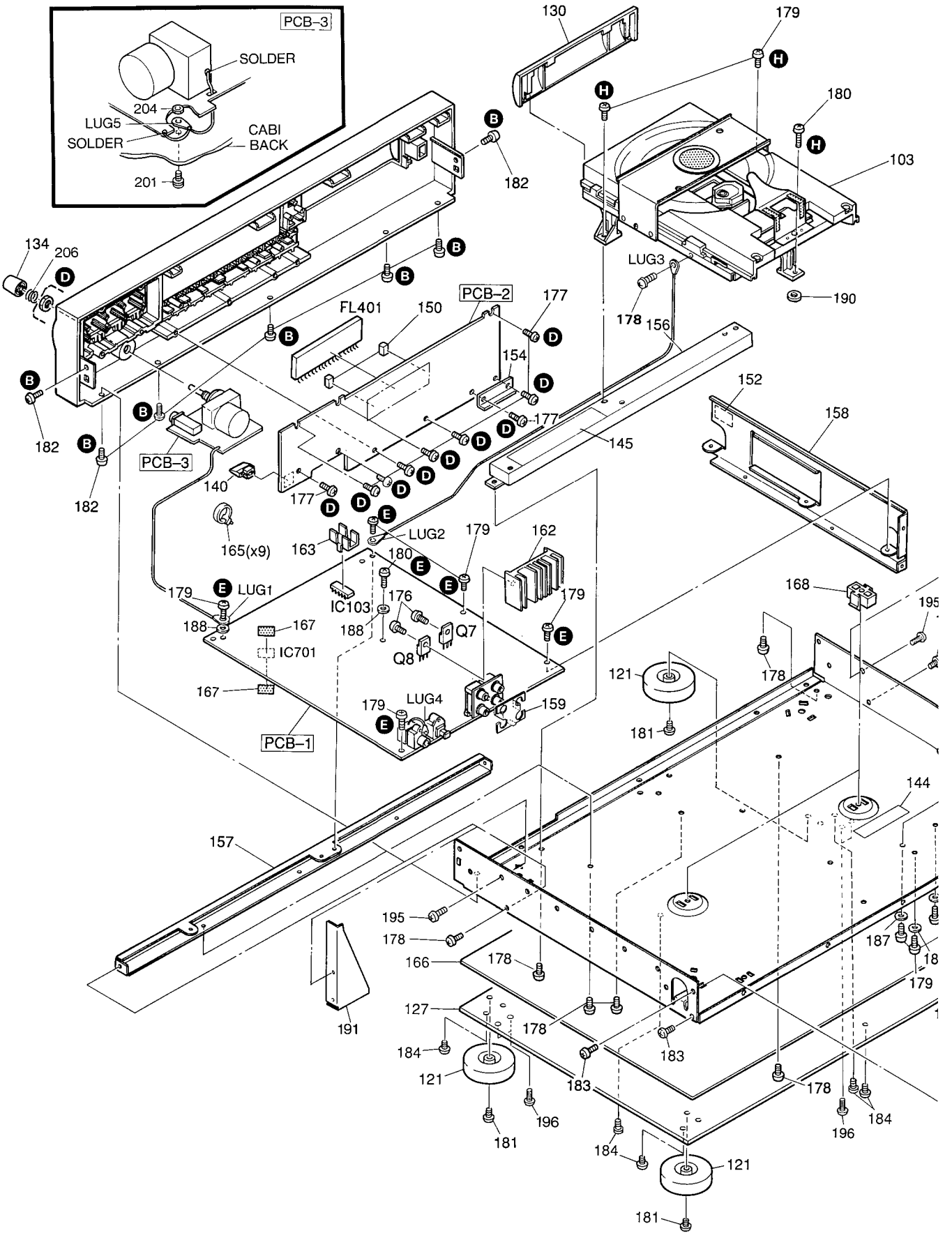

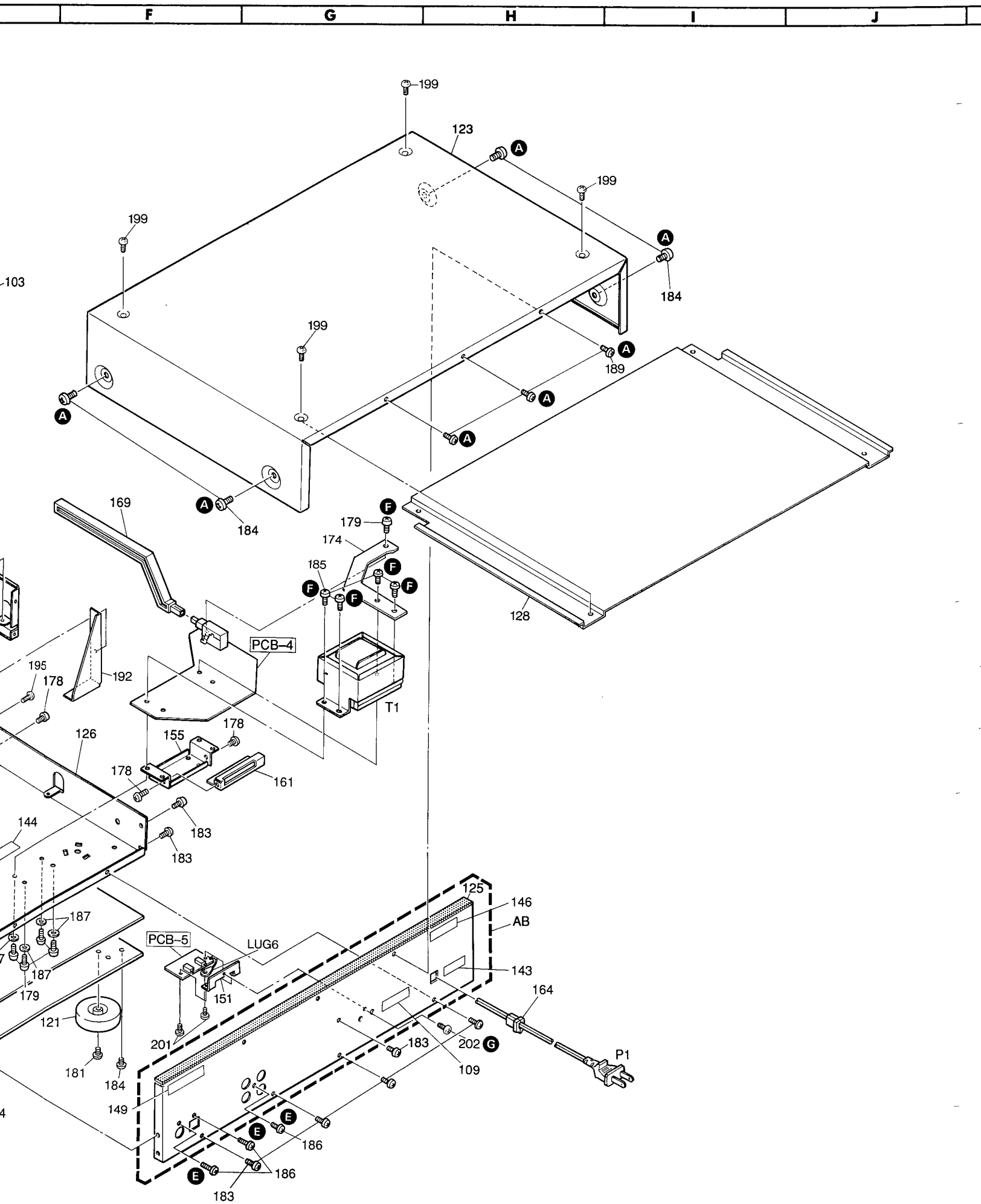
F
G
H
I
J
199
123
A
199
199
103
A
184
199
A
189
A
A
A
A
184
169
F
179
174
185
F
F
F
F
128
PCB-4
195
178
192
T1
126
155
178
178
161
144
183
183
125
146
AB
187
PCB-5
LUG6
187
143
179
151
164
121
201
183
202
G
P1
181
184
109
149
E
E
186
186
E
183

PARTS LIST GENERAL UNIT

Ref. No.	Part No.	Description
AA	A442-HD7600IA	PANEL, FRONT ASS'Y UA I
AA	A442-HD7600IB	PANEL, FRONT ASS'Y BK IB BB WB NB
AB	A424-HD7600IA	CABI BACK, REAR ASS'Y UA BK
AB	A424-HD7600IB	CABI BACK, REAR ASS'Y I IB BB
AB	A424-HD7600NB	CABI BACK, REAR ASS'Y WB
AB	A424-HD7600NC	CABI BACK, REAR ASS'Y NB
103	3119-01204	CD MECHA
109	1117-78	SERIAL LABEL
121	1319-02301	LEG
123	1414-16301	CABINET, TOP
125	1424-33007	CABI BACK, REAR UA BK
125	1424-33008	CABI BACK, REAR I IB BB
125	1424-33017	CABI BACK, REAR WB
125	1424-33018	CABI BACK, REAR NB
126	1424-29602	CABI BACK, BOTTOM
127	1423-03201	CABI BACK, WEIGHT PLATE
128	1424-33701	CABI BACK, TOP INSIDE
129	1442-22007EXP	PANEL, FRONT UA I
129	1442-22008EXP	PANEL, FRONT BK IB BB WB NB
130	1452-08302	LID, MECHA UA I
130	1452-08301	LID, MECHA BK IB BB WB NB
131	1511-19803	PLATE, FL FILTER
132	1532-17502	WINDOW, FRONT
134	1632-19803	ROTARY KNOB, OUTPUT LEVEL UA I
134	1632-19801	ROTARY KNOB, OUTPUT LEVEL BK IB BB WB NB
135	1662-52103	PUSH BUTTON, PLAY, PAUSE, STOP, SKIP, SEARCH UA I
135	1662-52101	PUSH BUTTON, PLAY, PAUSE, STOP, SKIP, SEARCH BK IB BB WB NB
136	1662-52402	PUSH BUTTON, FUNCTION UA I
136	1662-52401	PUSH BUTTON, FUNCTION BK IB BB WB NB
137	1662-52003	PUSH BUTTON, POWER UA I
137	1662-52001	PUSH BUTTON, POWER BK IB BB WB NB
138	1662-52004	PUSH BUTTON, OPEN/CLOSE UA I
138	1662-52002	PUSH BUTTON, OPEN/CLOSE BK IB BB WB NB
139	1662-36303	PUSH BUTTON, 10-KEY UA I
139	1662-36301	PUSH BUTTON, 10-KEY BK IB BB WB NB
140	1662-52303	PUSH BUTTON, DIGITAL OUT UA I
140	1662-52301	PUSH BUTTON, DIGITAL OUT BK IB BB WB NB
143	1341-**568	NAME PLATE UA BK
144	1756-03305	LABEL UA BK I IB BB WB
145	1756-09602	LABEL UA BK
145	1756-12101	LABEL I IB BB WB NB
146	1756-CSA	LABEL UA BK
149	1756-11801	LABEL UA BK I IB BB WB
150	2114-86143	BUSHING, FL
151	2219-8298	METAL FITTG, PCB-5
152	2111-1197	FELT, CD MECHA
154	2216-7187	SHIELD PLATE, PCB-2
155	2219-8262	METAL FITTG, TRANSFORMER
156	2219-8290	METAL FITTG, CD MECHA
157	2219-8263	METAL FITTG, HOLIZONTAL
158	2219-8264	METAL FITTG, VERTICAL
159	2216-7189	SHIELD PLATE, RCA PIN JACK
161	2219-8282	METAL FITTG
162	2222-7215	HEAT SINK, Q7, Q8
163	2222-7264	HEAT SINK, IC103
164	2240-364	HOLDER, AC CORD
165	2240-R0101	HOLDER
166	2132-7163	SPACER
167	2111-11772	FELT
168	2360-7018	BOSS, SPECIAL
169	2601-7187	SHAFT, POWER SWITCH
171	2651-2101732	SPRING
174	2219-F416	METAL FITTG
176	2327-R0130082	SCREW (+) (3 x 8mm)
177	2347-R0126082	SELF-TAPPING SCREW (+) (2.6 x 8mm)
178	2347-R0130062	SELF-TAPPING SCREW (+) (3 x 6mm)
179	2347-R0130082	SELF-TAPPING SCREW (+) (3 x 8mm)
180	2347-R0130162	SELF-TAPPING SCREW (+) (3 x 16mm)
181	2347-R0140084	SELF-TAPPING SCREW (+) (4 x 8mm)
182	2347-R0130064	SELF-TAPPING SCREW (+) (3 x 6mm)
183	2347-R0130084	SELF-TAPPING SCREW (+) (3 x 8mm)
184	2347-R0140064	SELF-TAPPING SCREW (+) (4 x 6mm)
185	2347-R0140102	SELF-TAPPING SCREW (+) (4 x 10mm)
186	2347-R0130104	SELF-TAPPING SCREW (+) (3 x 10mm)
187	2401-037	WASHER, METAL
188	2401-035	WASHER, METAL
189	2347-300847	SELF-TAPPING SCREW (+) (3 x 8mm)
190	2402-0374	WASHER, PLASTIC
191	2219-8318	METAL FITTG
192	2219-8319	METAL FITTG
195	2347-R0130062	SELF-TAPPING SCREW (+) (3 x 6mm)
196	2347-R0140084	SELF-TAPPING SCREW (+) (4 x 8mm)
199	2323-601049	SCREW (+) (6 x 10mm)
201	2327-R0130062	SCREW (+) (3 x 6mm)
202	2327-R0130064	SCREW (+) (3 x 6mm)
204	2440-7016	NUT, SPE
206	2651-110541	SPRING
⚠ P1	4161-03601202	CORD W/PLUG UA BK
⚠ P1	4161-03701220	CORD W/PLUG I IB
⚠ P1	4161-04100	CORD W/PLUG BB
⚠ P1	4161-7256	CORD W/PLUG WB
⚠ P1	4161-00401192	CORD W/PLUG NB
⚠ T1	5584-S7001	XFORMER, POWER UA BK
⚠ T1	5584-S7002	XFORMER, POWER I IB BB
⚠ T1	5584-S6302	XFORMER, POWER WB
⚠ T1	5584-S6303	XFORMER, POWER NB

EXPLODED VIEW

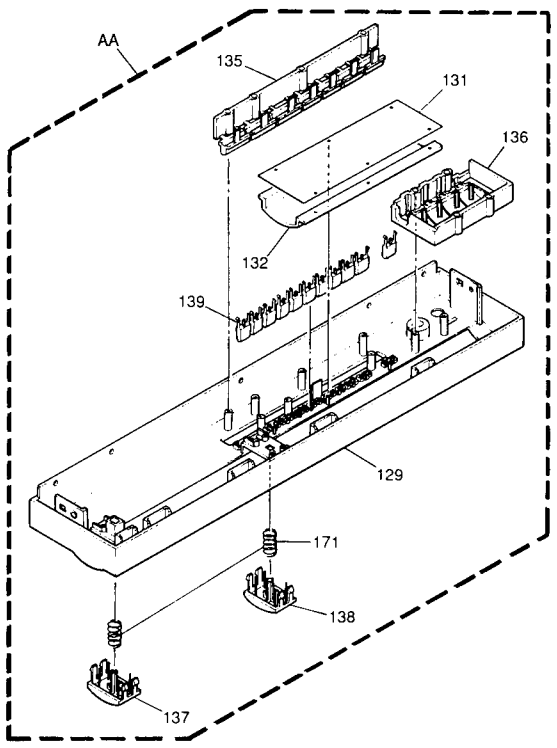

F G H I J

PACKAGE

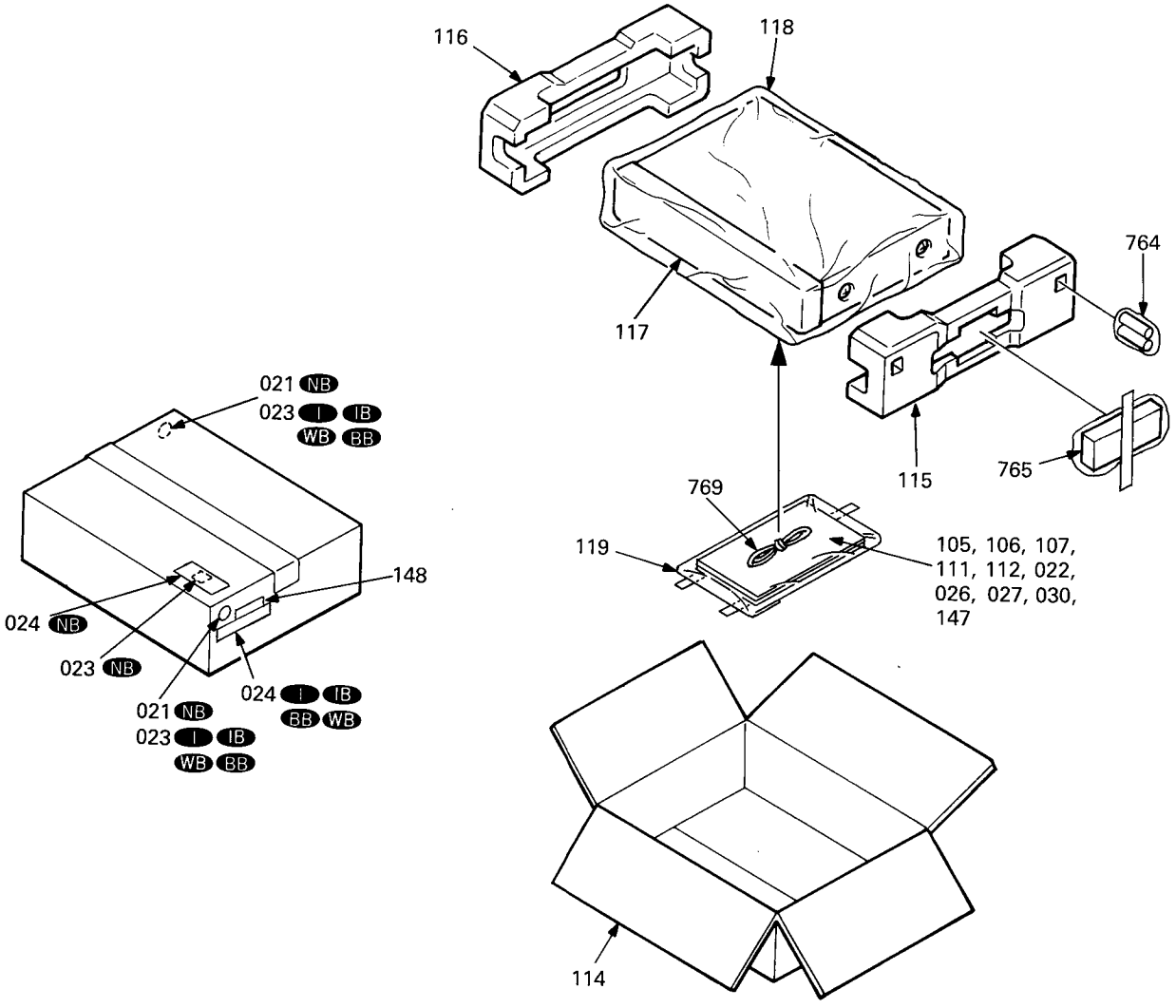

PARTS LIST PACKAGE

Ref. No.	Part No.	Description
021	1756-03113	LABEL NB
022	1113-OC	OWNER CARD NB
023	1756-03108	LABEL I IB WB
023	1756-03111	LABEL BB
023	1116-GC	GUARANT CARD NB
024	1756-06303	LABEL I IB BB WB
024	1241-PB	POLYETHY BAG NB
026	1111-M30253	OWNER GUIDE I IB
026	1111-J30253	OWNER GUIDE WB
027	1111-M30319	OWNER GUIDE BB
030	1111-J30320	OWNER GUIDE WB
105	1111-M30333	OWNER GUIDE UA BK BB WB
105	1111-M30334	OWNER GUIDE I IB
105	1111-J2054	OWNER GUIDE NB
106	1119-01203	ATTACH SHEET UA BK
107	1113-717004	OWNER CARD UA BK

Ref. No.	Part No.	Description
111	1119-03102	ATTACH SHEET UA BK
112	1119-03402	ATTACH SHEET UA BK
114	1221-28114	CARTON BOX UA I
114	1221-28115	CARTON BOX BK IB BB
114	1221-28123	CARTON BOX WB NB
115	1222-7366	CUSHION
116	1223-7367	CUSHION
117	1223-11729	SOFT SHEET
118	1241-C1491	POLYETHY BAG
119	1241-R0123350	POLYETHY BAG
147	1756-11604	LABEL UA BK
148	1756-11701	LABEL UA BK
764	4191-0355	BATTERY, DRY
765	6142-05506	REMOTE CONTROL ASS'Y UA BK I IB BB
765	4142-05504	REMOTE CONTROL ASS'Y WB NB
769	4161-04601102	CORD W/PLUG, RCA TYPE

P. C. BOARDS

PCB-1 MAIN P. C. BOARD

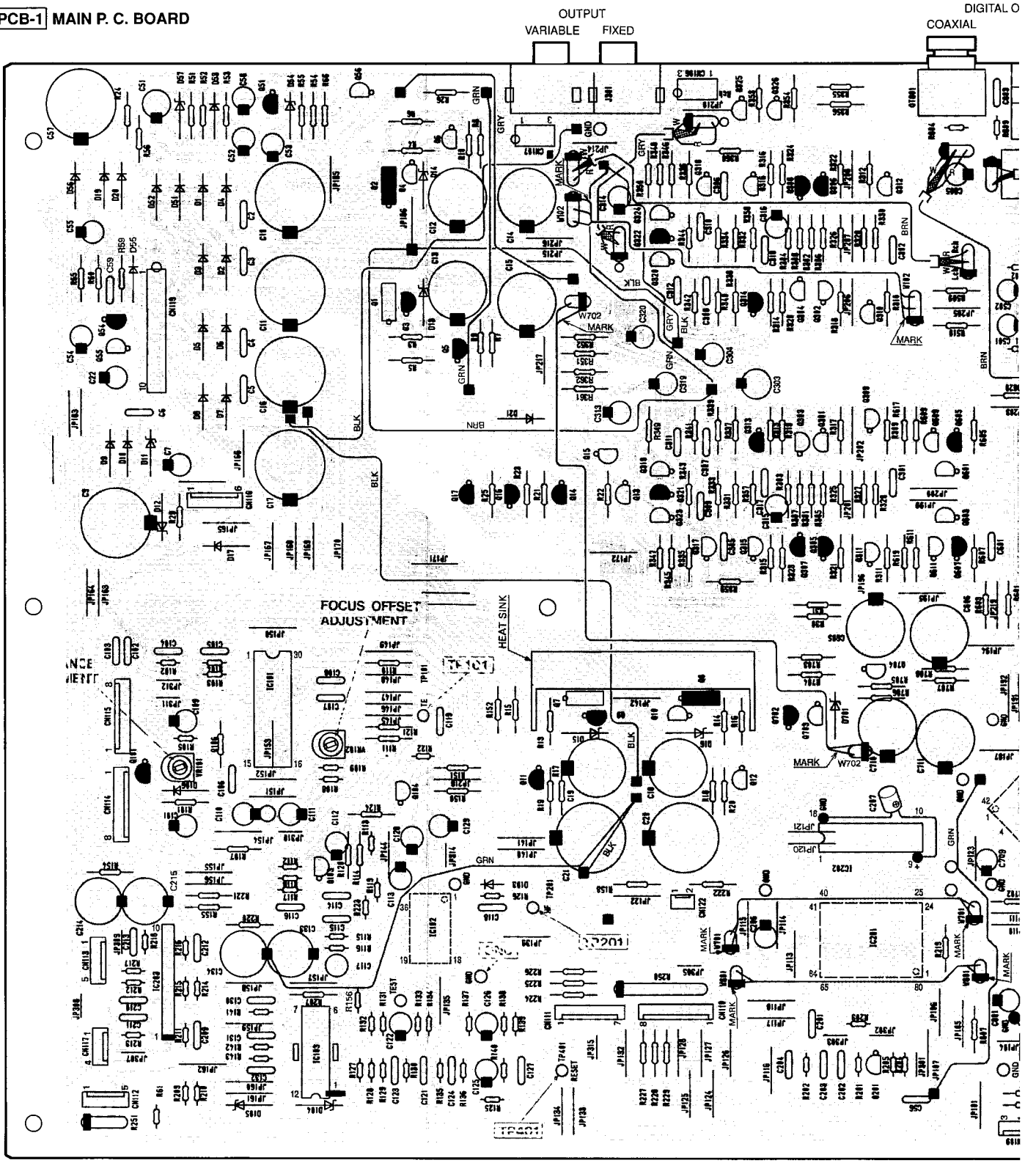

DIGITAL OUT
COAXIAL OPTICAL LUG4

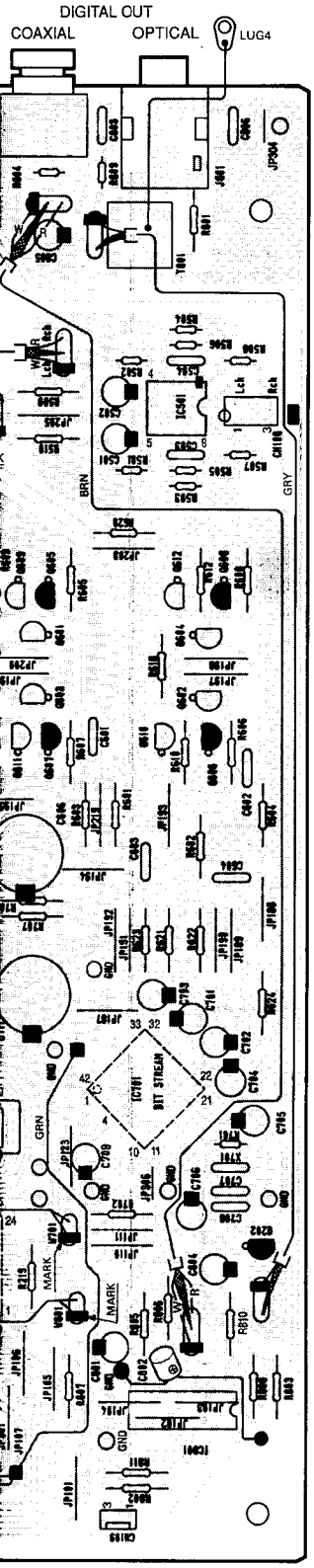

PCB-4 POWER SWITCH P. C. BOARD

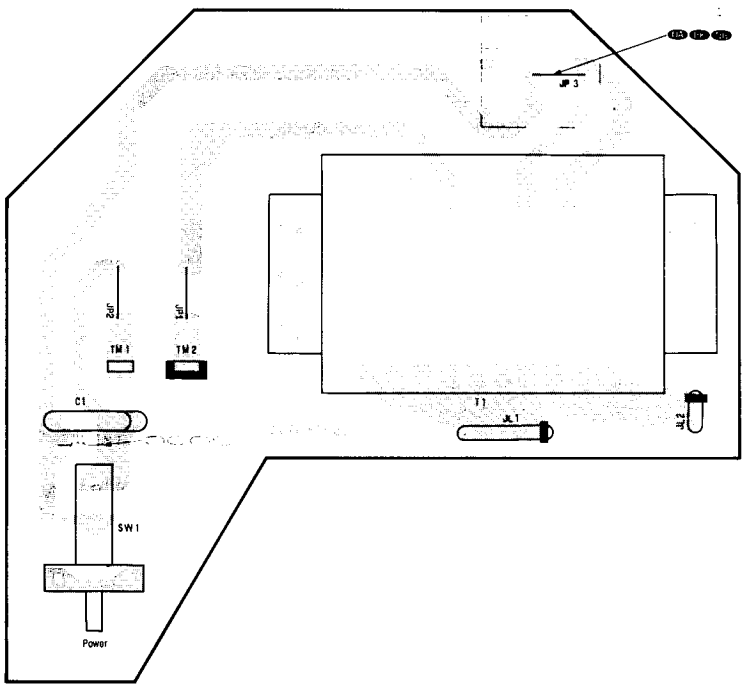

PCB-2 FRONT P. C. BOARD

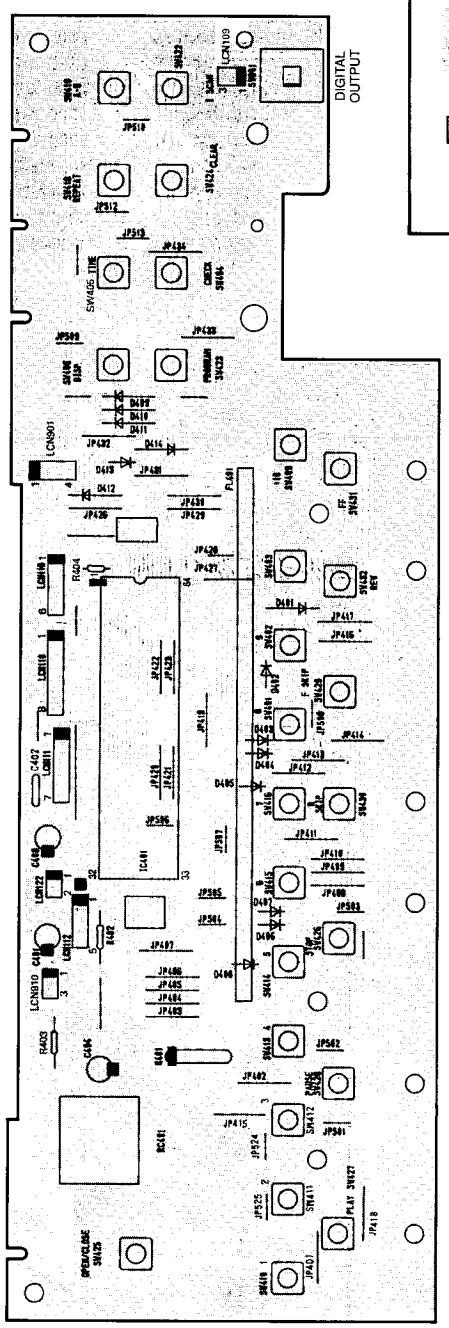

PCB-3 OUTPUT LEVEL & JACK P. C. BOARD

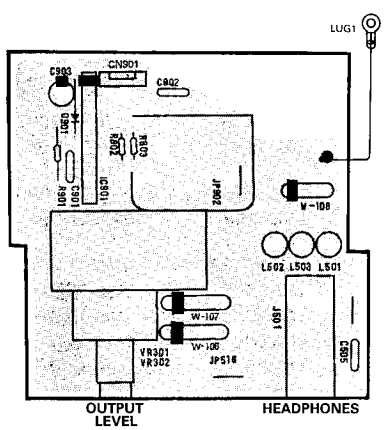

PCB-5 REMOTE JACK P. C. BOARD

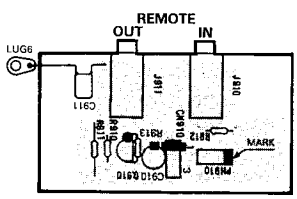

BLOCK DIAGRAM

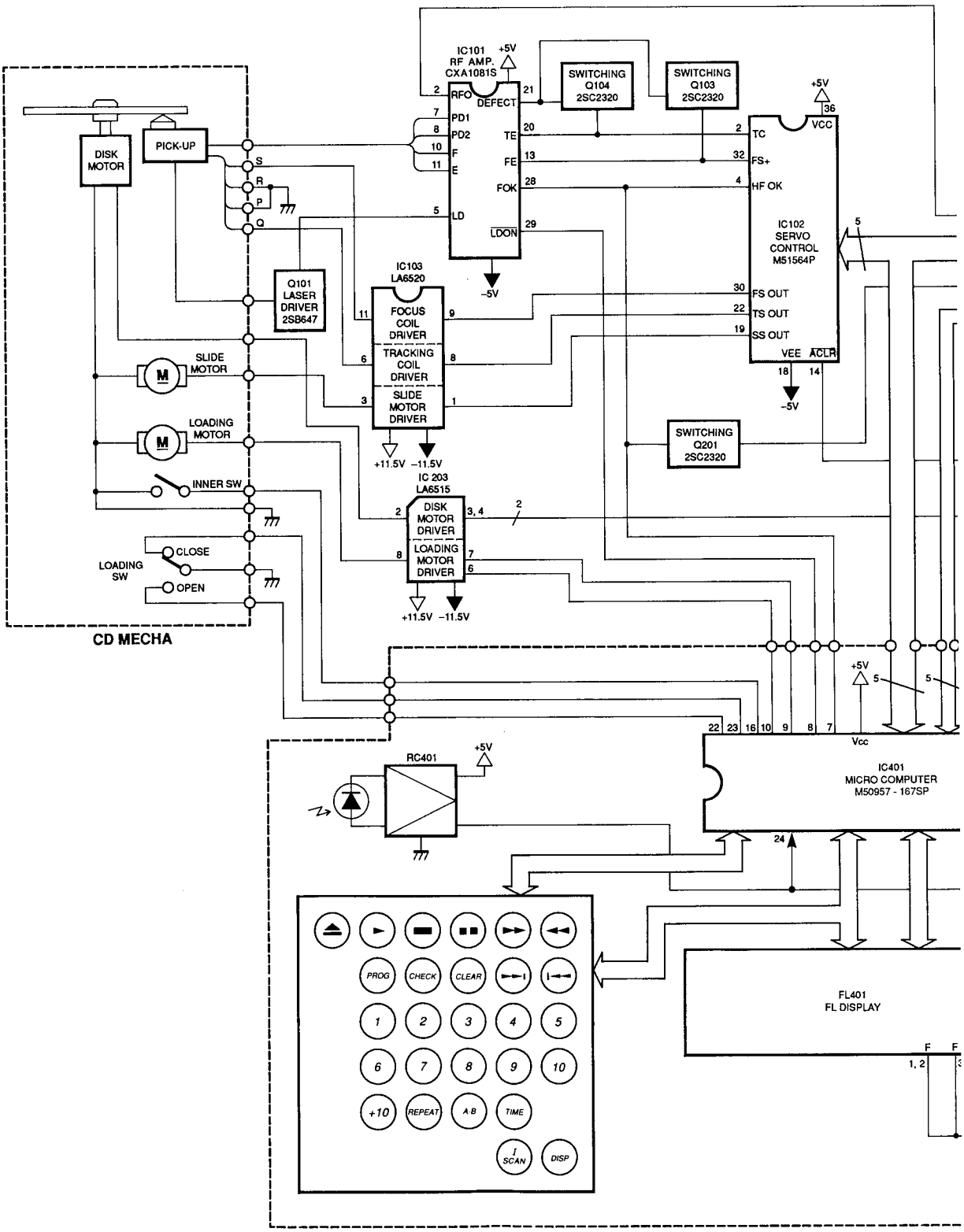

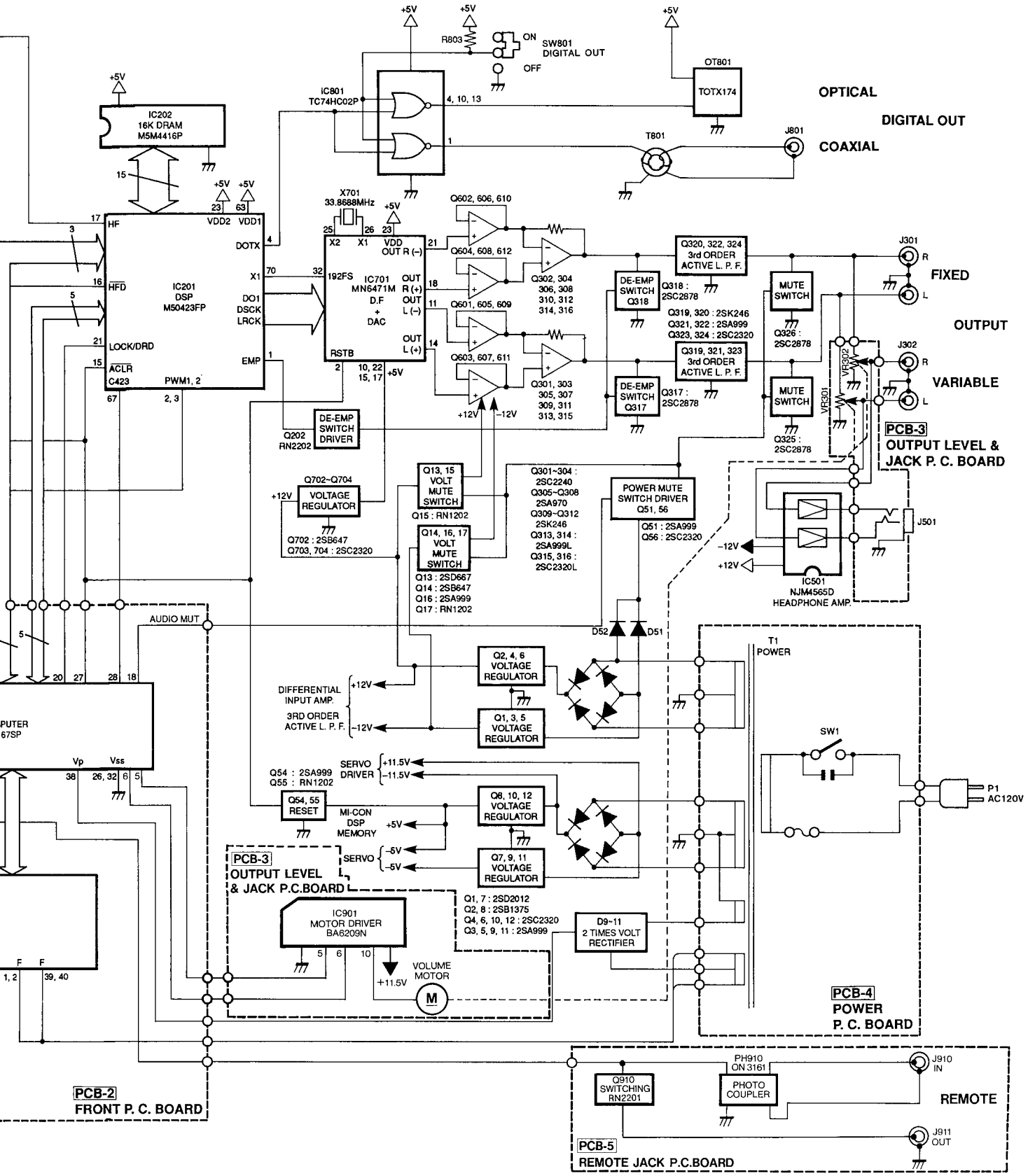
E
F
G
H
I
J
+5V
R803
ON
SW801
DIGITAL OUT
OFF
IC801
TC74HC02P
OT801
TOTX174
OPTICAL
DIGITAL OUT
COAXIAL
T801
J801
IC202
16K DRAM
M5M4416P
X701
33.8688MHz
IC201
DSP
M50423FP
IC701
MN6471M
D.F
+
DAC
Q602, 606, 610
Q604, 608, 612
Q601, 605, 609
Q603, 607, 611
Q302, 304
306, 308
310, 312
314, 316
Q301, 303
305, 307
309, 311
313, 315
Q320, 322, 324
3rd ORDER
ACTIVE L. P. F.
Q319, 321, 323
3rd ORDER
ACTIVE L. P. F.
DE-EMP
SWITCH
Q318
DE-EMP
SWITCH
Q317
Q318 :
2SC2878
Q317 :
2SC2878
Q319, 320 : 2SK246
Q321, 322 : 2SA999
Q323, 324 : 2SC2320
MUTE
SWITCH
Q326 :
2SC2878
Q325 :
2SC2878
J301
J302
FIXED
OUTPUT
VARIABLE
VR302
VR301
PCB-3
OUTPUT LEVEL &
JACK P. C. BOARD
Q202
RN2202
DE-EMP
SWITCH
DRIVER
Q702~Q704
VOLTAGE
REGULATOR
Q702 : 2SB647
Q703, 704 : 2SC2320
Q13, 15
VOLT
MUTE
SWITCH
Q15 : RN1202
Q14, 16, 17
VOLT
MUTE
SWITCH
Q13 : 2SD667
Q14 : 2SB647
Q16 : 2SA999
Q17 : RN1202
Q301~304 :
2SC2240
Q305~Q308
2SA970
Q309~Q312
2SK246
Q313, 314 :
2SA999L
Q315, 316 :
2SC2320L
POWER MUTE
SWITCH DRIVER
Q51, 56
Q51 : 2SA999
Q56 : 2SC2320
J501
IC501
NJM4565D
HEADPHONE AMP.
AUDIO MUT
D52
D51
T1
POWER
Q2, 4, 6
VOLTAGE
REGULATOR
Q1, 3, 5
VOLTAGE
REGULATOR
DIFFERENTIAL
INPUT AMP.
3RD ORDER
ACTIVE L. P. F.
SW1
P1
AC120V
SERVO
DRIVER
Q54 : 2SA999
Q55 : RN1202
Q54, 55
RESET
MI-CON
DSP
MEMORY
Q8, 10, 12
VOLTAGE
REGULATOR
Q7, 9, 11
VOLTAGE
REGULATOR
PCB-3
OUTPUT LEVEL
& JACK P.C.BOARD
IC901
MOTOR DRIVER
BA6209N
VOLUME
MOTOR
Q1, 7 : 2SD2012
Q2, 8 : 2SB1375
Q4, 6, 10, 12 : 2SC2320
Q3, 5, 9, 11 : 2SA999
D9~11
2 TIMES VOLT
RECTIFIER
PCB-4
POWER
P. C. BOARD
PCB-2
FRONT P. C. BOARD
PH910
ON 3161
PHOTO
COUPLER
Q910
SWITCHING
RN2201
J910
IN
J911
OUT
REMOTE
PCB-5
REMOTE JACK P.C.BOARD

WIRING DIAGRAM

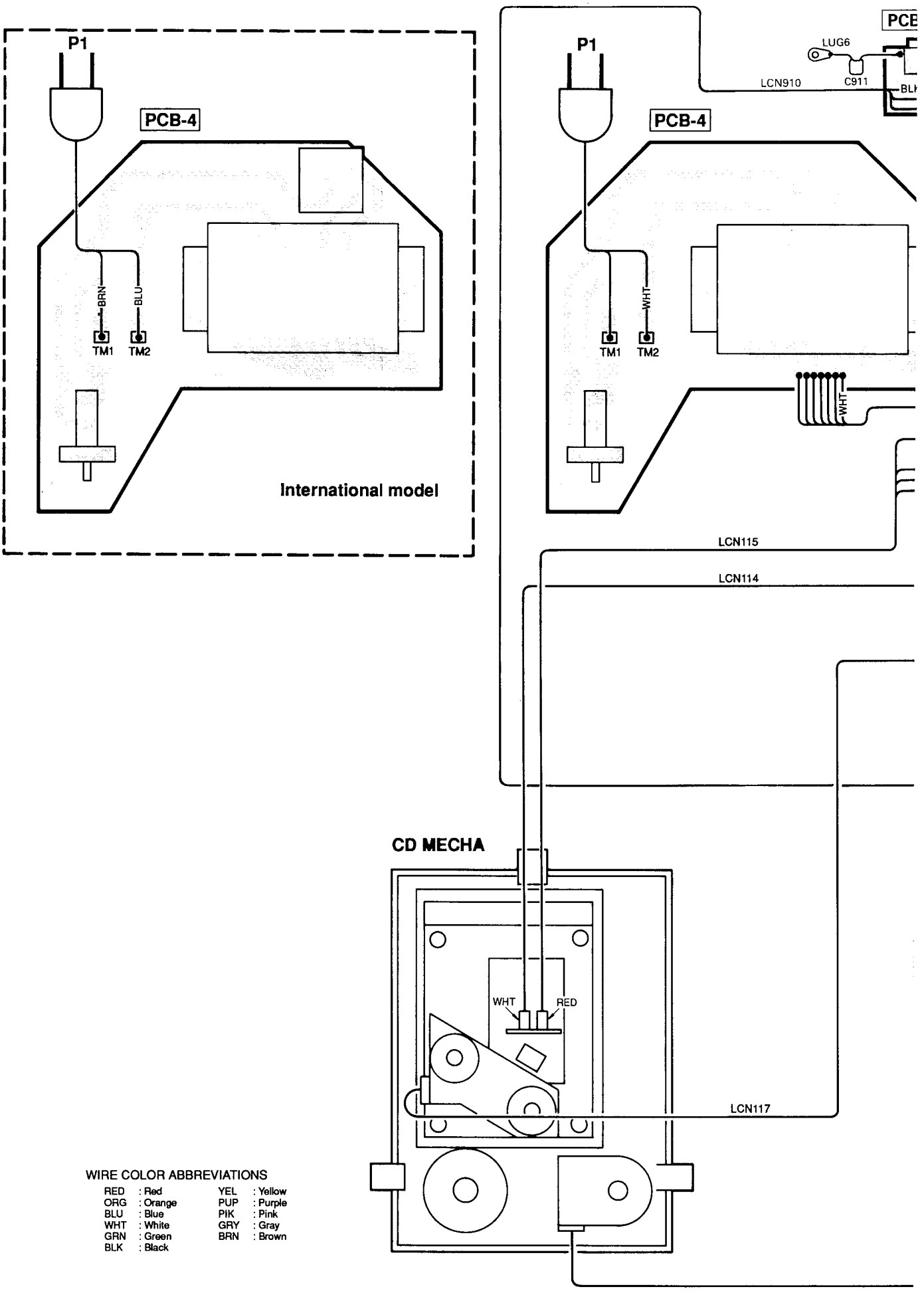

WIRE COLOR ABBREVIATIONS

RED	: Red	YEL	: Yellow
ORG	: Orange	PUP	: Purple
BLU	: Blue	PIK	: Pink
WHT	: White	GRY	: Gray
GRN	: Green	BRN	: Brown
BLK	: Black		

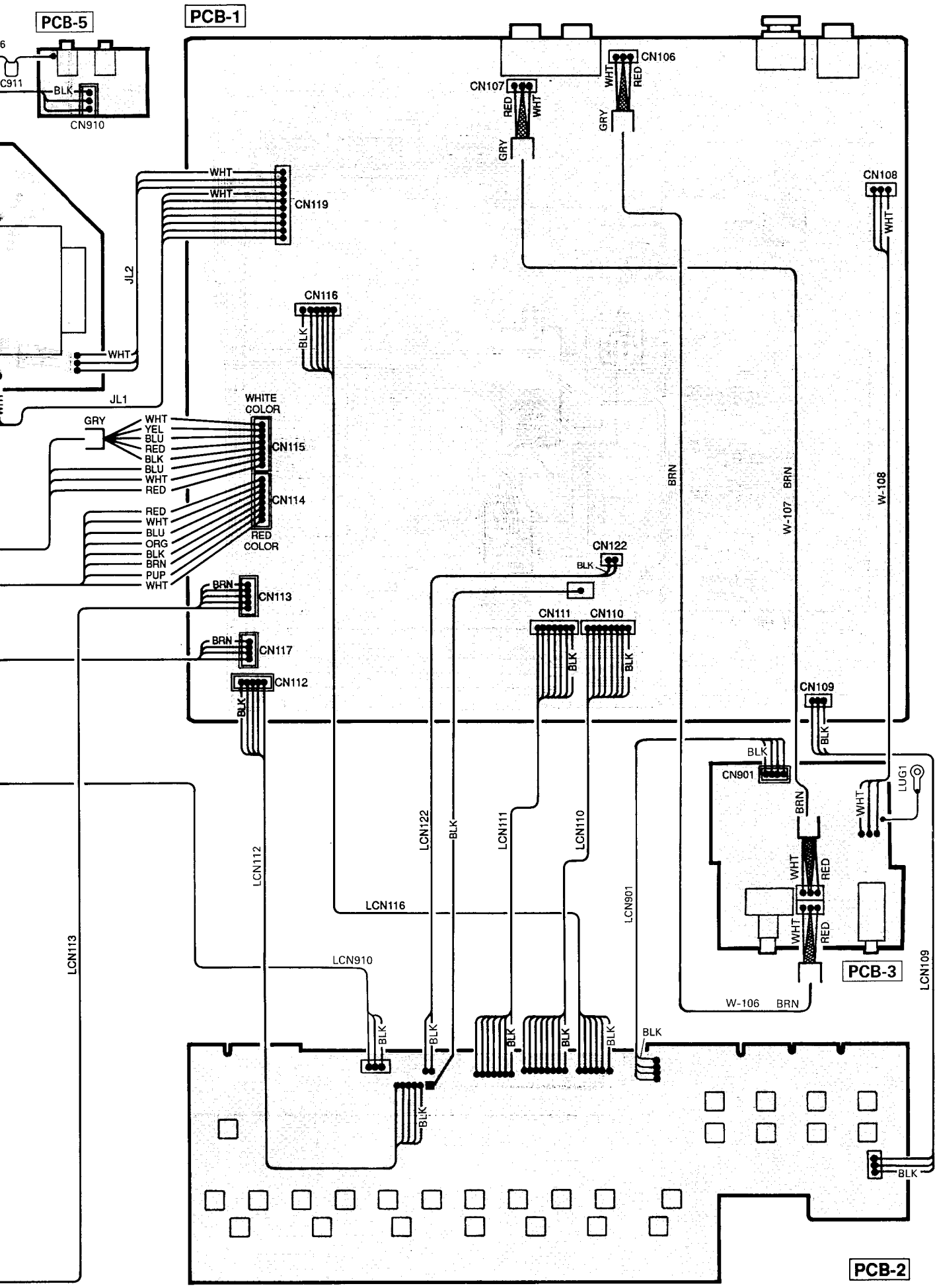
PCB-5
PCB-1
CN910
BLK
CN107
RED
WHT
GRY
CN106
WHT
RED
GRY
CN108
WHT
CN119
WHT
WHT
JL2
JL1
WHT
CN116
BLK
WHITE COLOR
GRY
WHT
YEL
BLU
RED
BLK
BLU
WHT
RED
CN115
CN114
RED
WHT
BLU
ORG
BLK
BRN
PUP
WHT
RED COLOR
BRN
CN113
BRN
CN117
CN112
BLK
CN122
BLK
CN111
CN110
BLK
BLK
CN109
BLK
BLK
CN901
BRN
WHT
LUG1
WHT
RED
WHT
RED
PCB-3
W-106 BRN
BRN
W-107 BRN
W-108
LCN112
LCN122
BLK
LCN111
LCN110
LCN901
LCN116
LCN910
LCN113
LCN109
BLK
BLK
BLK
BLK
BLK
BLK
BLK
BLK
PCB-2

ELECTRICAL PARTS LIST

Ser. No.	Ref. No.	Part No.	Description
		PCB-1 MAIN P.C. BOARD	
		CAPACITORS	
567	C2	5354-104593	CAP, MYL .1 μ
567	C3	5354-104593	CAP, MYL .1 μ
567	C4	5354-104593	CAP, MYL .1 μ
567	C5	3554-104593	CAP, MYL .1 μ
567	C6	5354-104593	CAP, MYL .1 μ
548	C7	5345-226F0962	CAP, MINI ELE 22 μ/50V
544	C9	5345-477E0962	CAP, MINI ELE 470 μ/35V
543	C10	5345-228D0962	CAP, MINI ELE 2200 μ/25V
543	C11	5345-228D0962	CAP, MINI ELE 2200 μ/25V
546	C12	5345-477C0962	CAP, MINI ELE 470 μ/16V
546	C13	5345-477C0962	CAP, MINI ELE 470 μ/16V
630	C14	5345-S06CM108	CAP, MINI ELE 1000 μ/16V
630	C15	5345-S06CM108	CAP, MINI ELE 1000 μ/16V
541	C16	5345-228C0962	CAP, MINI ELE 2200 μ/16V
541	C17	5345-228C0962	CAP, MINI ELE 2200 μ/16V
547	C18	5345-227B0962	CAP, MINI ELE 220 μ/10V
547	C19	5345-227B0962	CAP, MINI ELE 220 μ/10V
545	C20	5345-108C0962	CAP, MINI ELE 1000 μ/16V
545	C21	5345-108C0962	CAP, MINI ELE 1000 μ/16V
556	C22	5345-106F0962	CAP, MINI ELE 10 μ/50V
550	C51	5345-226D0962	CAP, MINI ELE 22 μ/25V
550	C52	5345-226D0962	CAP, MINI ELE 22 μ/25V
549	C53	5345-107B0962	CAP, MINI ELE 100 μ/10V
551	C54	5345-106F0962	CAP, MINI ELE 10 μ/50V
551	C55	5345-106F0962	CAP, MINI ELE 10 μ/50V
530	C56	5354-473593	CAP, MYL .047 μ
542	C57	5345-108D0962	CAP, MINI ELE 1000 μ/25V
552	C58	5345-105F0962	CAP, MINI ELE 1 μ/50V
568	C59	5354-104593	CAP, MYL .1 μ
549	C101	5345-107B0962	CAP, MINI ELE 100 μ/10V
583	C102	5353-100534	CAP, MCA 10p
583	C103	5353-100534	CAP, MCA 10p
583	C104	5353-100534	CAP, MCA 10p
579	C105	5359-3325851	CAP, PPP 3300p
569	C106	5354-333593	CAP, MYL .033 μ
569	C107	5354-333593	CAP, MYL .033 μ
577	C108	5359-1035851	CAP, PPP .01 μ
554	C109	5345-476B0962	CAP, MINI ELE 47 μ/10V
554	C110	5345-476B0962	CAP, MINI ELE 47 μ/10V
554	C111	5345-476B0962	CAP, MINI ELE 47 μ/10V
557	C112	5345-474F0962	CAP, MINI ELE .47 μ/50V
589	C113	5345-226D0951	CAP, MINI ELE 22 μ/25V
570	C114	5354-823593	CAP, MYL .082 μ
580	C115	5359-6815851	CAP, PPP 680p
565	C116	5354-274593	CAP, MYL .27 μ
560	C117	5342-105F0951	CAP, ELE BP 1 μ/50V
568	C118	5354-104593	CAP, MYL .1 μ
581	C119	5359-4725851	CAP, PPP 4700p
577	C121	5359-1035851	CAP, PPP .01 μ
558	C122	5354-684593	CAP, MYL .68 μ
582	C123	5359-3925851	CAP, PPP 3900p
575	C124	5359-1515851	CAP, PPP 150p
556	C125	5345-106F0962	CAP, MINI ELE 10 μ/50V
557	C126	5345-474F0962	CAP, MINI ELE 47 μ/50V
564	C127	5354-563593	CAP, MYL .056 μ
554	C128	5345-476B0962	CAP, MINI ELE 47 μ/10V
554	C129	5345-476B0962	CAP, MINI ELE 47 μ/10V
568	C130	5354-104593	CAP, MYL .1 μ
568	C131	5354-104593	CAP, MYL .1 μ
568	C132	5354-104593	CAP, MYL .1 μ
553	C133	5345-107D0962	CAP, MINI ELE 100 μ/25V
553	C134	5345-107D0962	CAP, MINI ELE 100 μ/25V
579	C201	5359-3325851	CAP, PPP 3300p
576	C202	5359-5625851	CAP, PPP 5600p
578	C203	5359-4715851	CAP, PPP 470p
566	C204	5354-154593	CAP, MYL .15 μ
561	C206	5345-S06BM107	CAP, MINI ELE 100 μ/10V
563	C207	5345-106F0951	CAP, MINI ELE 10 μ/50V
578	C209	5359-4715851	CAP, PPP 470p
578	C210	5359-4715851	CAP, PPP 470p
568	C211	5354-104593	CAP, MYL .1 μ
584	C212	5353-220534	CAP, MCA 22p
568	C213	5354-104593	CAP, MYL .1 μ
553	C214	5345-107D0962	CAP, MINI ELE 100 μ/25V
553	C215	5345-107D0962	CAP, MINI ELE 100 μ/25V
586	C301	5353-181534	CAP, MCA 180p
586	C302	5353-181534	CAP, MCA 180p
590	C303	5345-S06DM227	CAP, MINI ELE 220 μ/25V
590	C304	5345-S06DM227	CAP, MINI ELE 220 μ/25V
572	C305	5359-2735851	CAP, PPP .027 μ
572	C306	5359-2735851	CAP, PPP .027 μ
573	C307	5359-3915851	CAP, PPP 390p
573	C308	5359-3915851	CAP, PPP 390p
573	C309	5359-3915851	CAP, PPP 390p
573	C310	5359-3915851	CAP, PPP 390p
574	C311	5359-1525851	CAP, PPP 1500p
574	C312	5359-1525851	CAP, PPP 1500p
571	C313	5345-S06DM227	CAP, MINI ELE 220 μ/25V
571	C314	5345-S06DM227	CAP, MINI ELE 220 μ/25V
561	C315	5345-S06BM107	CAP, MINI ELE 100 μ/10V
561	C316	5345-S06BM107	CAP, MINI ELE 100 μ/10V
587	C317	5353-050534	CAP, MCA 5p
587	C318	5353-050534	CAP, MCA 5p
590	C319	5345-S06DM227	CAP, MINI ELE 220 μ/25V
590	C320	5345-S06DM227	CAP, MINI ELE 220 μ/25V
559	C501	5345-476D0962	CAP, MINI ELE 47 μ/25V
559	C502	5345-476D0962	CAP, MINI ELE 47 μ/25V
584	C503	5353-220534	CAP, MCA 22p
584	C504	5353-220534	CAP, MCA 22p
585	C601	5353-330534	CAP, MCA 33p
585	C602	5353-330534	CAP, MCA 33p
588	C603	5353-820534	CAP, MCA 82p
588	C604	5353-820534	CAP, MCA 82p
590	C605	5345-S06DM227	CAP, MINI ELE 220 μ/25V
590	C606	5345-S06DM227	CAP, MINI ELE 220 μ/25V
562	C701	5345-S06FM106	CAP, MINI ELE 10 μ/50V
562	C702	5345-S06FM106	CAP, MINI ELE 10 μ/50V
562	C703	5345-S06FM106	CAP, MINI ELE 10 μ/50V
562	C704	5345-S06FM106	CAP, MINI ELE 10 μ/50V
562	C705	5345-S06FM106	CAP, MINI ELE 10 μ/50V
562	C706	5345-S06FM106	CAP, MINI ELE 10 μ/50V
587	C707	5353-050534	CAP, MCA 5p
587	C708	5353-050534	CAP, MCA 5p
561	C709	5345-S06BM107	CAP, MINI ELE 100 μ/10V
547	C710	5345-227B0962	CAP, MINI ELE 220 μ/10V
555	C711	5345-S06DM477	CAP, MINI ELE 470 μ/25V
784	C801	5345-476C0951	CAP, MINI ELE 47 μ/16V
782	C802	5345-106F0951	CAP, MINI ELE 10 μ/50V
785	C803	5353-560534	CAP, MCA 56p
783	C804	5345-336C0962	CAP, MINI ELE 33 μ/16V
784	C805	5345-476C0951	CAP, MINI ELE 47 μ/16V
781	C806	5354-104593	CAP, MYL .1 μ
		RESISTORS	
606	R3	5134-222J25P	RES, CBN 1/4P 2.2K
606	R4	5134-222J25P	RES, CBN 1/4P 2.2K
598	R5	5134-471J25P	RES, CBN 1/4P 470
598	R6	5134-471J25P	RES, CBN 1/4P 470
611	R7	5134-101J25P	RES, CBN 1/4P 100
611	R8	5134-101J25P	RES, CBN 1/4P 100
620	R9	5135-4R7522	RES, CBN 1/2P 4.7
620	R10	5135-4R7522	RES, CBN 1/2P 4.7
609	R13	5134-152J25P	RES, CBN 1/4P 1.5K
609	R14	5134-152J25P	RES, CBN 1/4P 1.5K
598	R15	5134-471J25P	RES, CBN 1/4P 470
598	R16	5134-471J25P	RES, CBN 1/4P 470
611	R17	5134-101J25P	RES, CBN 1/4P 100
611	R18	5134-101J25P	RES, CBN 1/4P 100
619	R19	5135-2R2522	RES, CBN 1/2P 2.2
619	R20	5135-2R2522	RES, CBN 1/2P 2.2
592	R21	5134-103J25P	RES, CBN 1/4P 10K
592	R22	5134-103J25P	RES, CBN 1/4P 10K
617	R23	5134-473J25P	RES, CBN 1/4P 47K
594	R24	5134-223J25P	RES, CBN 1/4P 22K
592	R25	5134-103J25P	RES, CBN 1/4P 10K
593	R26	5134-102J25P	RES, CBN 1/4P 1K

Ser. No.	Ref. No.	Part No.	Description
594	R29	5134-223J25P	RES, CBN 1/4P 22K
611	R30	5134-101J25P	RES, CBN 1/4P 100
611	R31	5134-101J25P	RES, CBN 1/4P 100
599	R51	5134-152J25P	RES, CBN 1/4P 1.5K
600	R52	5134-224J25P	RES, CBN 1/4P 220K
594	R53	5134-223J25P	RES, CBN 1/4P 22K
618	R54	5135-103522	RES, CBN 1/2P 10K
597	R55	5134-101J25P	RES, CBN 1/4P 100
603	R56	5135-471522	RES, CBN 1/2P 470
602	R59	5134-104J25P	RES, CBN 1/4P 100K
602	R60	5134-104J25P	RES, CBN 1/4P 100K
655	R61	5232-103J16P	RES, CBN 1/6P 10K
601	R65	5134-272J25P	RES, CBN 1/4P 2.7K
623	R66	5135-221522	RES, CBN 1/2P 220
595	R101	5134-220J25P	RES, CBN 1/4P 22
661	R102	5232-222J16P	RES, CBN 1/6P 2.2K
663	R103	5232-163J16P	RES, CBN 1/6P 16K
662	R104	5232-822J16P	RES, CBN 1/6P 8.2K
664	R105	5232-223J16P	RES, CBN 1/6P 22K
593	R106	5134-102J25P	RES, CBN 1/4P 1K
596	R107	5134-910J25P	RES, CBN 1/4P 91
665	R108	5232-183J16P	RES, CBN 1/6P 18K
659	R109	5232-153J16P	RES, CBN 1/6P 15K
593	R110	5134-102J25P	RES, CBN 1/4P 1K
591	R111	5134-103J25P	RES, CBN 1/4P 10K
653	R112	5232-104J16P	RES, CBN 1/6P 100K
655	R113	5232-103J16P	RES, CBN 1/6P 10K
594	R114	5134-223J25P	RES, CBN 1/4P 22K
673	R115	5232-683J16P	RES, CBN 1/6P 68K
659	R116	5232-153J16P	RES, CBN 1/6P 15K
672	R117	5232-682J16P	RES, CBN 1/6P 6.8K
652	R118	5232-221J16P	RES, CBN 1/6P 220
667	R119	5232-473J16P	RES, CBN 1/6P 47K
591	R120	5134-103J25P	RES, CBN 1/4P 10K
591	R121	5134-103J25P	RES, CBN 1/4P 10K
666	R122	5232-273J16P	RES, CBN 1/6P 27K
591	R124	5134-103J25P	RES, CBN 1/4P 10K
656	R125	5232-102J16P	RES, CBN 1/6P 1K
653	R126	5232-104J16P	RES, CBN 1/6P 100K
654	R127	5232-104J16P	RES, CBN 1/6P 100K
667	R128	5232-473J16P	RES, CBN 1/6P 47K
655	R129	5232-103J16P	RES, CBN 1/6P 10K
671	R130	5232-822J16P	RES, CBN 1/6P 8.2K
654	R131	5232-104J16P	RES, CBN 1/6P 100K
654	R132	5232-104J16P	RES, CBN 1/6P 100K
670	R133	5232-562J16P	RES, CBN 1/6P 5.6K
668	R134	5232-332J16P	RES, CBN 1/6P 3.3K
665	R135	5232-183J16P	RES, CBN 1/6P 18K
664	R136	5232-223J16P	RES, CBN 1/6P 22K
669	R137	5232-393J16P	RES, CBN 1/6P 39K
664	R138	5232-223J16P	RES, CBN 1/6P 22K
674	R139	5232-472J16P	RES, CBN 1/6P 4.7K
669	R140	5232-393J16P	RES, CBN 1/6P 39K
651	R141	5232-100J16P	RES, CBN 1/6P 10
651	R142	5232-100J16P	RES, CBN 1/6P 10
651	R143	5232-100J16P	RES, CBN 1/6P 10
622	R150	5134-4R7J25P	RES, CBN 1/4P 4.7
622	R151	5134-4R7J25P	RES, CBN 1/4P 4.7
622	R152	5134-4R7J25P	RES, CBN 1/4P 4.7
622	R153	5134-4R7J25P	RES, CBN 1/4P 4.7
681	⚠R154	5102-4R75116	RES, FUSE 4.7
681	⚠R155	5102-4R75116	RES, FUSE 4.7
674	R156	5232-472J16P	RES, CBN 1/6P 4.7K
664	R201	5232-223J16P	RES, CBN 1/6P 22K
661	R202	5232-222J16P	RES, CBN 1/6P 2.2K
675	R203	5232-124J16P	RES, CBN 1/6P 120K
655	R204	5232-103J16P	RES, CBN 1/6P 10K
654	R205	5232-104J16P	RES, CBN 1/6P 100K
594	R207	5134-223J25P	RES, CBN 1/4P 22K
653	R209	5232-104J16P	RES, CBN 1/6P 100K
653	R210	5232-104J16P	RES, CBN 1/6P 100K
657	R211	5232-334J16P	RES, CBN 1/6P 330K
657	R212	5232-334J16P	RES, CBN 1/6P 330K
651	R213	5232-100J16P	RES, CBN 1/6P 10
653	R214	5232-104J16P	RES, CBN 1/6P 100K
653	R215	5232-104J16P	RES, CBN 1/6P 100K
654	R216	5232-104J16P	RES, CBN 1/6P 100K
653	R217	5232-104J16P	RES, CBN 1/6P 100K
651	R218	5232-100J16P	RES, CBN 1/6P 10
598	R219	5134-471J25P	RES, CBN 1/4P 470
681	⚠R220	5102-4R75116	RES, FUSE 4.7
681	⚠R221	5102-4R75116	RES, FUSE 4.7
681	⚠R222	5102-4R75116	RES, FUSE 4.7
676	R223	5232-824J16P	RES, CBN 1/6P 820K
606	R224	5134-222J25P	RES, CBN 1/4P 2.2K
606	R225	5134-222J25P	RES, CBN 1/4P 2.2K
606	R226	5134-222J25P	RES, CBN 1/4P 2.2K
606	R227	5134-222J25P	RES, CBN 1/4P 2.2K
606	R228	5134-222J25P	RES, CBN 1/4P 2.2K
606	R229	5134-222J25P	RES, CBN 1/4P 2.2K
688	R250	5212-S0307103	R COMPOSITE 10K x 7
687	R251	5212-S0303103	R COMPOSITE 10K x 3
597	R301	5134-101J25P	RES, CBN 1/4P 100
597	R302	5134-101J25P	RES, CBN 1/4P 100
597	R303	5134-101J25P	RES, CBN 1/4P 100
597	R304	5134-101J25P	RES, CBN 1/4P 100
597	R305	5134-101J25P	RES, CBN 1/4P 100
597	R306	5134-101J25P	RES, CBN 1/4P 100
597	R307	5134-101J25P	RES, CBN 1/4P 100
597	R308	5134-101J25P	RES, CBN 1/4P 100
605	R309	5134-470J25P	RES, CBN 1/4P 47
605	R310	5134-470J25P	RES, CBN 1/4P 47
605	R311	5134-470J25P	RES, CBN 1/4P 47
605	R312	5134-470J25P	RES, CBN 1/4P 47
607	R313	5134-121J25P	RES, CBN 1/4P 120
607	R314	5134-121J25P	RES, CBN 1/4P 120
607	R315	5134-121J25P	RES, CBN 1/4P 120
607	R316	5134-121J25P	RES, CBN 1/4P 120
598	R317	5134-471J25P	RES, CBN 1/4P 470
598	R318	5134-471J25P	RES, CBN 1/4P 470
598	R319	5134-471J25P	RES, CBN 1/4P 470
598	R320	5134-471J25P	RES, CBN 1/4P 470
598	R321	5134-471J25P	RES, CBN 1/4P 470
598	R322	5134-471J25P	RES, CBN 1/4P 470
598	R323	5134-471J25P	RES, CBN 1/4P 470
598	R324	5134-471J25P	RES, CBN 1/4P 470
606	R325	5134-222J25P	RES, CBN 1/4P 2.2K
606	R326	5134-222J25P	RES, CBN 1/4P 2.2K
592	R327	5134-103J25P	RES, CBN 1/4P 10K
592	R328	5134-103J25P	RES, CBN 1/4P 10K
606	R329	5134-222J25P	RES, CBN 1/4P 2.2K
606	R330	5134-222J25P	RES, CBN 1/4P 2.2K
608	R331	5134-122J25P	RES, CBN 1/4P 1.2K
608	R332	5134-122J25P	RES, CBN 1/4P 1.2K
612	R333	5134-561J25P	RES, CBN 1/4P 560
612	R334	5134-561J25P	RES, CBN 1/4P 560
613	R335	5134-105J25P	RES, CBN 1/4P 1M
613	R336	5134-105J25P	RES, CBN 1/4P 1M
609	R337	5134-152J25P	RES, CBN 1/4P 1.5K
609	R338	5134-152J25P	RES, CBN 1/4P 1.5K
610	R339	5134-472J25P	RES, CBN 1/4P 4.7K
610	R340	5134-472J25P	RES, CBN 1/4P 4.7K
610	R341	5134-472J25P	RES, CBN 1/4P 4.7K
610	R342	5134-472J25P	RES, CBN 1/4P 4.7K
611	R343	5134-101J25P	RES, CBN 1/4P 100
611	R344	5134-101J25P	RES, CBN 1/4P 100
593	R345	5134-102J25P	RES, CBN 1/4P 1K
593	R346	5134-102J25P	RES, CBN 1/4P 1K
611	R347	5134-101J25P	RES, CBN 1/4P 100
611	R348	5134-101J25P	RES, CBN 1/4P 100
611	R349	5134-101J25P	RES, CBN 1/4P 100
611	R350	5134-101J25P	RES, CBN 1/4P 100
595	R351	5134-220J25P	RES, CBN 1/4P 22
595	R352	5134-220J25P	RES, CBN 1/4P 22
615	R353	5134-182J25P	RES, CBN 1/4P 1.8K
615	R354	5134-182J25P	RES, CBN 1/4P 1.8K
616	R355	5134-154J25P	RES, CBN 1/4P 150K
616	R356	5134-154J25P	RES, CBN 1/4P 150K
591	R357	5134-103J25P	RES, CBN 1/4P 10K
591	R358	5134-103J25P	RES, CBN 1/4P 10K

Ser. No.	Ref. No.	Part No.	Description
614	R359	5134-472J25P	RES, CBN 1/4P 4.7K
614	R360	5134-472J25P	RES, CBN 1/4P 4.7K
595	R361	5134-220J25P	RES, CBN 1/4P 22
595	R362	5134-220J25P	RES, CBN 1/4P 22
655	R501	5232-103J16P	RES, CBN 1/6P 10K
655	R502	5232-103J16P	RES, CBN 1/6P 10K
660	R503	5232-333J16P	RES, CBN 1/6P 33K
660	R504	5232-333J16P	RES, CBN 1/6P 33K
659	R505	5232-153J16P	RES, CBN 1/6P 15K
659	R506	5232-153J16P	RES, CBN 1/6P 15K
658	R507	5232-101J16P	RES, CBN 1/6P 100
658	R508	5232-101J16P	RES, CBN 1/6P 100
621	R509	5134-100J25P	RES, CBN 1/4P 10
621	R510	5134-100J25P	RES, CBN 1/4P 10
591	R601	5134-103J25P	RES, CBN 1/4P 10K
591	R602	5134-103J25P	RES, CBN 1/4P 10K
591	R603	5134-103J25P	RES, CBN 1/4P 10K
591	R604	5134-103J25P	RES, CBN 1/4P 10K
593	R605	5134-102J25P	RES, CBN 1/4P 1K
593	R606	5134-102J25P	RES, CBN 1/4P 1K
593	R607	5134-102J25P	RES, CBN 1/4P 1K
593	R608	5134-102J25P	RES, CBN 1/4P 1K
597	R609	5134-101J25P	RES, CBN 1/4P 100
597	R610	5134-101J25P	RES, CBN 1/4P 100
597	R611	5134-101J25P	RES, CBN 1/4P 100
597	R612	5134-101J25P	RES, CBN 1/4P 100
604	R617	5134-562J25P	RES, CBN 1/4P 5.6K
604	R618	5134-562J25P	RES, CBN 1/4P 5.6K
604	R619	5134-562J25P	RES, CBN 1/4P 5.6K
604	R620	5134-562J25P	RES, CBN 1/4P 5.6K
592	R621	5134-103J25P	RES, CBN 1/4P 10K
592	R622	5134-103J25P	RES, CBN 1/4P 10K
592	R623	5134-103J25P	RES, CBN 1/4P 10K
592	R624	5134-103J25P	RES, CBN 1/4P 10K
674	R701	5232-472J16P	RES, CBN 1/6P 4.7K
598	R702	5134-471J25P	RES, CBN 1/4P 470
598	R703	5134-471J25P	RES, CBN 1/4P 470
606	R704	5134-222J25P	RES, CBN 1/4P 2.2K
625	R705	5135-100J522	RES, CBN 1/2P 10
611	R706	5134-101J25P	RES, CBN 1/4P 100
682	⚠R707	5102-1005116	RES, FUSE 10
682	⚠R708	5102-1005116	RES, FUSE 10
788	R801	5134-750J25P	RES, CBN 1/4P 75
791	R802	5134-102J25P	RES, CBN 1/4P 1K
787	R803	5134-103J25P	RES, CBN 1/4P 10K
789	R804	5232-822J16P	RES, CBN 1/6P 8.2K
792	R805	5134-100J25P	RES, CBN 1/4P 10
792	R806	5134-100J25P	RES, CBN 1/4P 10
790	R807	5134-101J25P	RES, CBN 1/4P 100
790	R808	5134-101J25P	RES, CBN 1/4P 100
793	R809	5232-101J16P	RES, CBN 1/6P 100
790	R810	5134-101J25P	RES, CBN 1/4P 100
791	R811	5134-102J25P	RES, CBN 1/4P 1K
		INTEGRATED CIRCUITS	
505	IC101	5653-CXA1081S	IC, LINEAR
502	IC102	5654-M51564P	IC, DIGITAL
506	IC103	5653-LA6520	IC, LINEAR
501	IC201	5654-M50423FP	IC, DIGITAL
504	IC202	5654-M5M4416P	IC, DIGITAL
507	IC203	5653-LA6515	IC, LINEAR
508	IC501	5653-NJM4565D	IC, LINEAR
503	IC701	5654-MN6471M	IC, DIGITAL
771	IC801	5654-T74HC02P	IC, DIGITAL
		TRANSISTORS	
510	Q1	5614-2012	XISTOR, NPN A
509	Q2	5612-1375	XISTOR, PNP A
516	Q3	5611-999(F)	XISTOR, PNP R
514	Q4	5613-2320(F)	XISTOR, NPN R
516	Q5	5611-999(F)	XISTOR, PNP R
514	Q6	5613-2320(F)	XISTOR, NPN R
510	Q7	5614-2012	XISTOR, NPN A
509	Q8	5612-1375	XISTOR, PNP A
516	Q9	5611-999(F)	XISTOR, PNP R
514	Q10	5613-2320(F)	XISTOR, NPN R
516	Q11	5611-999(F)	XISTOR, PNP R
514	Q12	5613-2320(F)	XISTOR, NPN R
512	Q13	5614-667(C)	XISTOR, NPN A
511	Q14	5612-647(C)	XISTOR, PNP A
518	Q15	5613-RN1202	XISTOR, NPN R
516	Q16	5611-999(F)	XISTOR, PNP R
518	Q17	5613-RN1202	XISTOR, NPN R
516	Q51	5611-999(F)	XISTOR, PNP R
516	Q54	5611-999(F)	XISTOR, PNP R
518	Q55	5613-RN1202	XISTOR, NPN R
514	Q56	5613-2320(F)	XISTOR, NPN R
511	Q101	5612-647(C)	XISTOR, PNP A
514	Q103	5613-2320(F)	XISTOR, NPN R
514	Q104	5613-2320(F)	XISTOR, NPN R
514	Q201	5613-2320(F)	XISTOR, NPN R
517	Q202	5611-RN2202	XISTOR, PNP R
519	Q301	5613-2240(BL)	XISTOR, NPN R
519	Q302	5613-2240(BL)	XISTOR, NPN R
519	Q303	5613-2240(BL)	XISTOR, NPN R
519	Q304	5613-2240(BL)	XISTOR, NPN R
520	Q305	5611-970(BL)	XISTOR, PNP R
520	Q306	5611-970(BL)	XISTOR, PNP R
520	Q307	5611-970(BL)	XISTOR, PNP R
520	Q308	5611-970(BL)	XISTOR, PNP R
522	Q309	5616-SK246GR2	FET, N-CH
522	Q310	5616-SK246GR2	FET, N-CH
522	Q311	5616-SK246GR2	FET, N-CH
522	Q312	5616-SK246GR2	FET, N-CH
515	Q313	5611-999L(F)	XISTOR, PNP R
515	Q314	5611-999L(F)	XISTOR, PNP R
513	Q315	5613-2320L(F)	XISTOR, NPN R
513	Q316	5613-2320L(F)	XISTOR, NPN R
521	Q317	5613-2878(B)	XISTOR, NPN R
521	Q318	5613-2878(B)	XISTOR, NPN R
522	Q319	5616-SK246GR2	FET, N-CH
522	Q320	5616-SK246GR2	FET, N-CH
515	Q321	5611-999L(F)	XISTOR, PNP R
515	Q322	5611-999L(F)	XISTOR, PNP R
513	Q323	5613-2320L(F)	XISTOR, NPN R
513	Q324	5613-2320L(F)	XISTOR, NPN R
521	Q325	5613-2878(B)	XISTOR, NPN R
521	Q326	5613-2878(B)	XISTOR, NPN R
522	Q601	5616-SK246GR2	FET, N-CH
522	Q602	5616-SK246GR2	FET, N-CH
522	Q603	5616-SK246GR2	FET, N-CH
522	Q604	5616-SK246GR2	FET, N-CH
515	Q605	5611-999L(F)	XISTOR, PNP R
515	Q606	5611-999L(F)	XISTOR, PNP R
515	Q607	5611-999L(F)	XISTOR, PNP R
515	Q608	5611-999L(F)	XISTOR, PNP R
513	Q609	5613-2320L(F)	XISTOR, NPN R
513	Q610	5613-2320L(F)	XISTOR, NPN R
513	Q611	5613-2320L(F)	XISTOR, NPN R
513	Q612	5613-2320L(F)	XISTOR, NPN R
511	Q702	5612-647(C)	XISTOR, PNP A
514	Q703	5613-2320(F)	XISTOR, NPN R
514	Q704	5613-2320(F)	XISTOR, NPN R
		DIODES	
531	⚠D1	5632-GP10E	DIODE, RECT
531	⚠D2	5632-GP10E	DIODE, RECT
531	⚠D3	5632-GP10E	DIODE, RECT
531	⚠D4	5632-GP10E	DIODE, RECT
531	⚠D5	5632-GP10E	DIODE, RECT
531	⚠D6	5632-GP10E	DIODE, RECT
531	⚠D7	5632-GP10E	DIODE, RECT
531	⚠D8	5632-GP10E	DIODE, RECT
531	⚠D9	5632-GP10E	DIODE, RECT
531	⚠D10	5632-GP10E	DIODE, RECT
538	D11	5635-HZ5B-2	DIODE, ZENER
539	D12	5635-HZ27-2	DIODE, ZENER
540	D13	5635-HZ12B2L	DIODE, ZENER
540	D14	5635-HZ12B2L	DIODE, ZENER
535	D15	5635-HZ6B2L	DIODE, ZENER
535	D16	5635-HZ6B2L	DIODE, ZENER

Ser. No.	Ref. No.	Part No.	Description
531	D17	5632-GP10E	DIODE, RECT
531	⚠D19	5632-GP10E	DIODE, RECT
531	⚠D20	5632-GP10E	DIODE, RECT
532	D21	5632-1S2473	DIODE, RECT
531	D51	5632-GP10E	DIODE, RECT
531	D52	5632-GP10E	DIODE, RECT
532	D53	5632-1S2473	DIODE, RECT
537	D54	5635-HZ6A2L	DIODE, ZENER
532	D55	5632-1S2473	DIODE, RECT
531	D56	5632-GP10E	DIODE, RECT
536	D57	5635-HZ9B2L	DIODE, ZENER
533	D103	5631-1SS133	DIODE, DET
534	D104	5635-HZ3B-2	DIODE, ZENER
534	D105	5635-HZ3B-2	DIODE, ZENER
531	D106	5632-GP10E	DIODE, RECT
535	D701	5635-HZ6B2L	DIODE, ZENER
		CONTROLS	
684	VR101	5101-22301934	RES, SEMI FIX 22K
683	VR102	5101-50201934	RES, SEMI FIX 5K
		MISCELLANEOUS	
695	CN106	4443-030185	CONNECTOR
695	CN107	4443-030185	CONNECTOR
695	CN108	4443-030185	CONNECTOR
798	CN109	4443-0301140	CONNECTOR
689	CN110	4443-0801140	CONNECTOR
693	CN111	4443-0701140	CONNECTOR
691	CN112	4443-0501140	CONNECTOR
691	CN113	4443-0501140	CONNECTOR
690	CN114	4443-03901008	CONNECTOR
689	CN115	4443-0801140	CONNECTOR
707	CN116	4443-0601140	CONNECTOR
692	CN117	4443-0401140	CONNECTOR
694	CN119	4443-100185	CONNECTOR
696	CN122	4443-0201140	CONNECTOR
746	⚠J301	4489-02601004	PIN JACK, 4P
800	J801	4481-00501	PIN JACK, 1P
640	LUG4	4211-4	LUG
796	OT801	4871-00101	OPT TRNSMT, M
799	T801	5933-S0801	COIL CASE, 10
697	W102	4242-R0103131	JUMPER LEAD
703	W701	4132-R0102101	CORD, 2C
704	W702	4132-R0102301	CORD, 2C
703	W801	4132-R0102101	CORD, 2C
686	X701	5691-S0901343	XTAL, OSC
753		4214-132	TERMINAL

PCB-2 FRONT P.C. BOARD

		CAPACITORS	
721	C401	5345-S06FM106	CAP, MINI ELE 10 μ/50V
720	C402	5354-104593	CAP, MYL .1 μ
721	C403	5345-S06FM106	CAP, MINI ELE 10 μ/50V
722	C404	5345-S06BM107	CAP, MINI ELE 100 μ/10V
		RESISTORS	
723	R401	5212-103J0401	R COMPOSITE 10K x 4
726	R402	5134-102J25P	RES, CBN 1/4P 1K
727	R403	5134-101J25P	RES, CBN 1/4P 100
728	R404	5232-332J16P	RES, CBN 1/6P 3.3K
		INTEGRATED CIRCUIT	
711	IC401	5654-M957-167	IC, DIGITAL
		DIODES	
717	D401	5632-1S2473	DIODE, RECT
718	D402	5631-1SS133	DIODE, DET
718	D403	5631-1SS133	DIODE, DET
718	D404	5631-1SS133	DIODE, DET
718	D405	5631-1SS133	DIODE, DET
718	D406	5631-1SS133	DIODE, DET
718	D407	5631-1SS133	DIODE, DET
718	D408	5631-1SS133	DIODE, DET
717	D409	5632-1S2473	DIODE, RECT
717	D410	5632-1S2473	DIODE, RECT
717	D411	5632-1S2473	DIODE, RECT
717	D412	5632-1S2473	DIODE, RECT
718	D413	5631-1SS133	DIODE, DET
717	D414	5632-1S2473	DIODE, RECT
		MISCELLANEOUS	
713	FL401	5722-046	TUBE DISPLAY
797	LCN109	4163-S0103101	CONNECTOR W/W
730	LCN110	4163-S0108161	CONNECTOR W/W
731	LCN111	4163-S0107161	CONNECTOR W/W
732	LCN112	4163-S0105161	CONNECTOR W/W
733	LCN116	4163-S0106301	CONNECTOR W/W
734	LCN122	4163-S0102201	CONNECTOR W/W
729	LCN901	4163-S0104161	CONNECTOR W/W
735	LCN910	4163-S0103451	CONNECTOR W/W
724	RC401	6143-00803	RECEIV BLOCK
715	SW401	4437-00606	SWITCH, PU-TC
715	SW402	4437-00606	SWITCH, PU-TC
715	SW403	4437-00606	SWITCH, PU-TC
714	SW404	4437-00610	SWITCH, PU-TC
714	SW405	4437-00610	SWITCH, PU-TC
714	SW406	4437-00610	SWITCH, PU-TC
715	SW409	4437-00606	SWITCH, PU-TC
715	SW410	4437-00606	SWITCH, PU-TC
715	SW411	4437-00606	SWITCH, PU-TC
715	SW412	4437-00606	SWITCH, PU-TC
715	SW413	4437-00606	SWITCH, PU-TC
715	SW414	4437-00606	SWITCH, PU-TC
715	SW415	4437-00606	SWITCH, PU-TC
715	SW416	4437-00606	SWITCH, PU-TC
714	SW418	4437-00610	SWITCH, PU-TC
714	SW419	4437-00610	SWITCH, PU-TC
714	SW422	4437-00610	SWITCH, PU-TC
714	SW423	4437-00610	SWITCH, PU-TC
714	SW424	4437-00610	SWITCH, PU-TC
714	SW425	4437-00610	SWITCH, PU-TC
714	SW426	4437-00610	SWITCH, PU-TC
714	SW427	4437-00610	SWITCH, PU-TC
714	SW428	4437-00610	SWITCH, PU-TC
714	SW429	4437-00610	SWITCH, PU-TC
714	SW430	4437-00610	SWITCH, PU-TC
714	SW431	4437-00610	SWITCH, PU-TC
714	SW432	4437-00610	SWITCH, PU-TC
777	SW801	4431-S0108102	SWITCH, PUSH

PCB-3 OUTPUT LEVEL & JACK P.C. BOARD

		CAPACITORS	
577	C505	5359-1035851	CAP, PPP .01 μ
780	C901	5354-104593	CAP, MYL .1 μ
780	C902	5354-104593	CAP, MYL .1 μ
786	C903	5345-476C0962	CAP, MINI ELE 47 μ/16V
		RESISTORS	
685	⚠R901	5102-1005116	RES, FUSE 10
795	R902	5232-103J16P	RES, CBN 1/6P 10K
795	R903	5232-103J16P	RES, CBN 1/6P 10K
		INTEGRATED CIRCUIT	
526	IC901	5653-BA6209N	IC, LINEAR
		DIODE	
527	D901	5635-HZ4A-2	DIODE, ZENER
		COILS	
628	L501	5995-1R0J107	COIL W/CORE
628	L502	5995-1R0J107	COIL W/CORE
628	L503	5995-1R0J107	COIL W/CORE
		CONTROLS	
742	VR301 /302	6161-00601	VR BLOCK
		MISCELLANEOUS	
706	CN901	4443-0401140	CONNECTOR
744	J501	4451-51501	JACK, 1P
739	LUG1	4162-00601500	LUG W/WIRE
640	LUG5	4211-4	LUG
745	W108	4242-R0203301	JUMPER LEAD

Ser. No.	Ref. No.	Part No.	Description
		PCB-4 POWER SWITCH P.C. BOARD	
		CAPACITORS	
749	⚠C1	5352-S010M103	CAP, MTL .01 μ UA BK NB
749B	⚠C1	5352-1030961	CAP, MTL .01 μ I IB BB WB
		RESISTOR	
022B	⚠R1	5135-335J50P	RES, CBN 1/2P 3.3M I IB BB WB
		MISCELLANEOUS	
751	JL1	4242-R0407201	JUMPER LEAD
750	JL2	4242-R0403201	JUMPER LEAD
748	⚠SW1	4433-01301	SWITCH, PU-PW
021B	⚠SW2	4411-1047111	SWITCH, ROTARY I IB BB WB
741	⚠T1	5584-S7001	XFORMER, POWER UA BK
741B	⚠T1	5584-S7002	XFORMER, POWER I IB BB
741B	⚠T1	5584-S6302	XFORMER, POWER WB
741C	⚠T1	5584-S6303	XFORMER, POWER NB
752	TM1	4214-122	TERMINAL
752	TM2	4214-122	TERMINAL
		PCB-5 REMOTE JACK P.C. BOARD	
		CAPACITORS	
529	C910	5345-226C0962	CAP, MINI ELE 22 μ/16V
638	C911	5354-104593	CAP, MYL .1 μ
		RESISTORS	
677	R910	5232-473J16P	RES, CBN 1/6P 47K
624	R911	5134-470J25P	RES, CBN 1/4P 47
678	R912	5232-271J16P	RES, CBN 1/6P 270
679	R913	5232-392J16P	RES, CBN 1/6P 3.9K
		TRANSISTOR	
523	Q910	5611-RN2201	XISTOR, PNP R
		MISCELLANEOUS	
698	CN910	4443-0301140	CONNECTOR
747	J910	4451-00184	JACK, 1P
747	J911	4451-00184	JACK, 1P
639	LUG6	4211-4	LUG
524	PH910	5624-ON3161	PHOTO COUPLR

Ser. No.	Ref. No.	Part No.	Description
		CHASSIS MISCELLANEOUS PARTS LIST	
		MISCELLANEOUS	
701	LCN113	4163-03212005	CONNECTOR W/W
700	LCN114	4163-03210008	CONNECTOR W/W
699	LCN115	4163-03211008	CONNECTOR W/W
702	LCN117	4163-03207004	CONNECTOR W/W
740	LUG2/3	4162-00201800	LUG W/WIRE
768	⚠P1	4161-03601202	CORD W/PLUG UA BK
768B	⚠P1	4161-03701220	CORD W/PLUG I IB WB
768D	⚠P1	4161-04100	CORD W/PLUG BB
768C	⚠P1	4161-00401192	CORD W/PLUG NB

ABBREVIATIONS IN PARTS LIST

CAPACITORS

CAP, MINI ELE	: Electrolytic
CAP, CER	: Ceramic
CAP, PPP	: Polypropylene
CAP, MYL	: Mylar
CAP, MCA	: Mica
CAP, MINI BP	: Bipolar
CAP, ELE BP	: Electrolytic Bipolar
470 μ	: 470 μF
6800p	: 6800pF
.047 μ	: 0.047 μF

RESISTORS

RES, CBN 1/6P	: Carbon 1/6W
RES, FUSE	: Fuse
RES, CEM 5P	: Cement 5W
RES, MTL 1P	: Metal 1W
2.2K	: 2.2kΩ
220	: 220Ω

TRANSISTORS

XISTOR	: Transistor
FET	: Field Effect Transistor

CONTROLS

RES, SEMI FIX	: Semi-fixed Resistor

NOTE

⚠ SAFETY RELATED COMPONENT. USE ONLY EXACT REPLACEMENT PART AS SPECIFIED.

INFRARED REMOTE CONTROL SCHEMATIC DIAGRAM

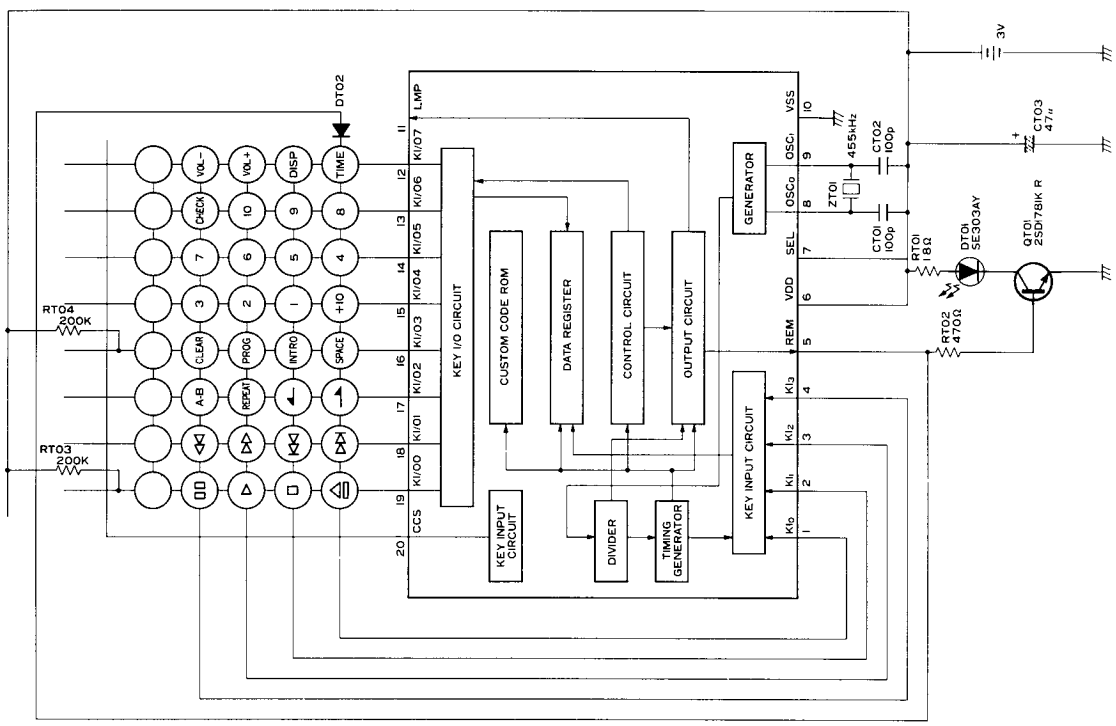

SCHEMATIC DIAGRAM

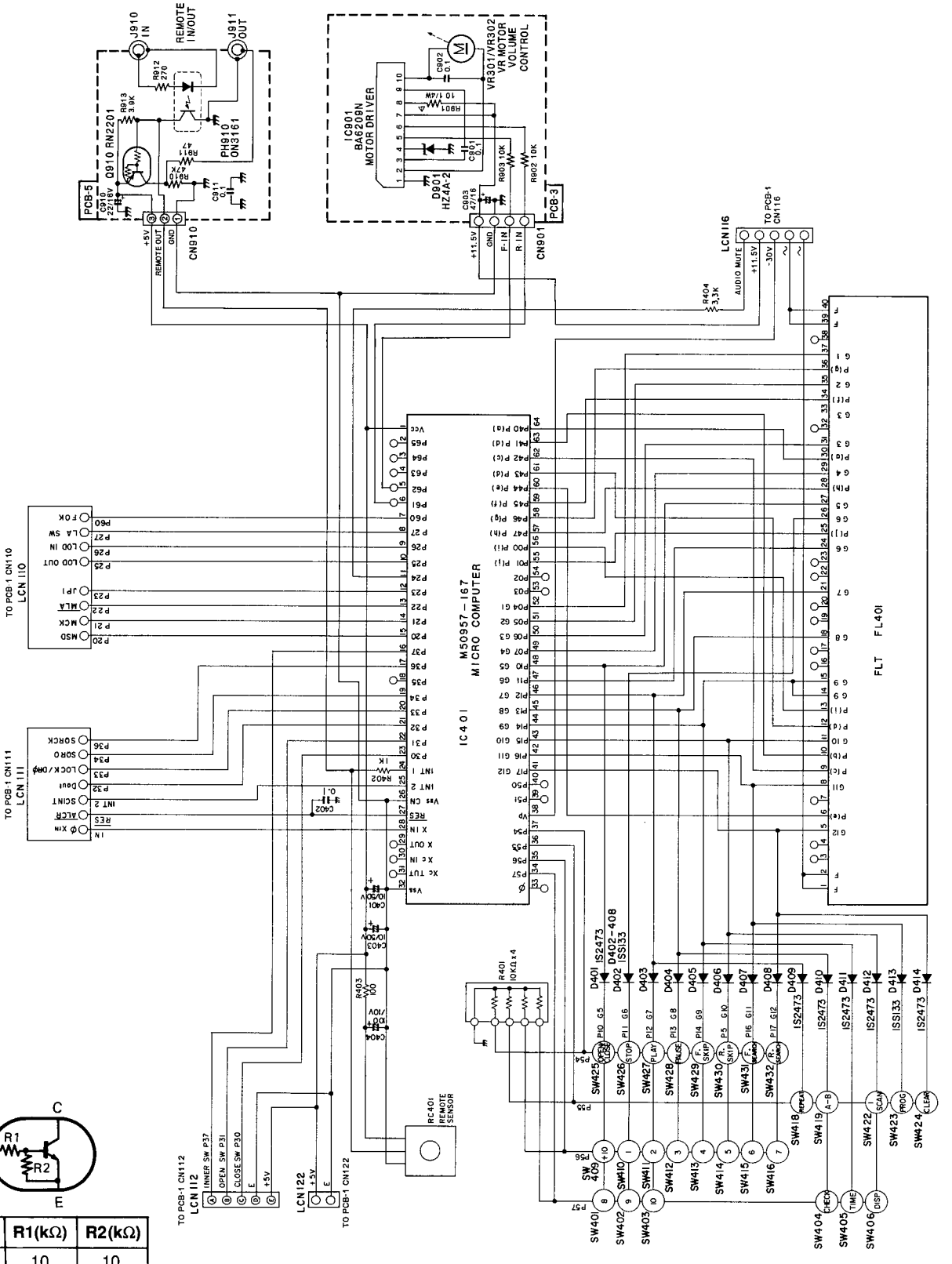

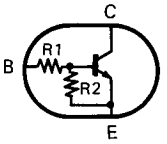

Type	R1(kΩ)	R2(kΩ)
RN1202	10	10

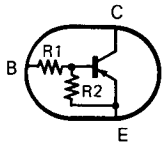

Type	R1(kΩ)	R2(kΩ)
RN2202	10	10
RN2203	22	22

NOTE:

1. ALL RESISTANCES VALUES ARE IN Ω.
   KΩ=1000Ω, MΩ=1000KΩ.
2. ALL CAPACITANCES VALUE ARE IN μF UNLESS OTHERWISE NOTED. P=μμF.
3. . . . V : DC VOLTAGE AT PLAY MODE.
   (. . . V) : DC VOLTAGE AT STOP MODE.
4. SAFETY REQUIREMENTS COMPONENTS IN ACCORDANCE WITH PRESENT SAFETY REGULATIONS, THESE COMPONENTS MUST ONLY BE REPLACED BY ORIGINAL PARTS.

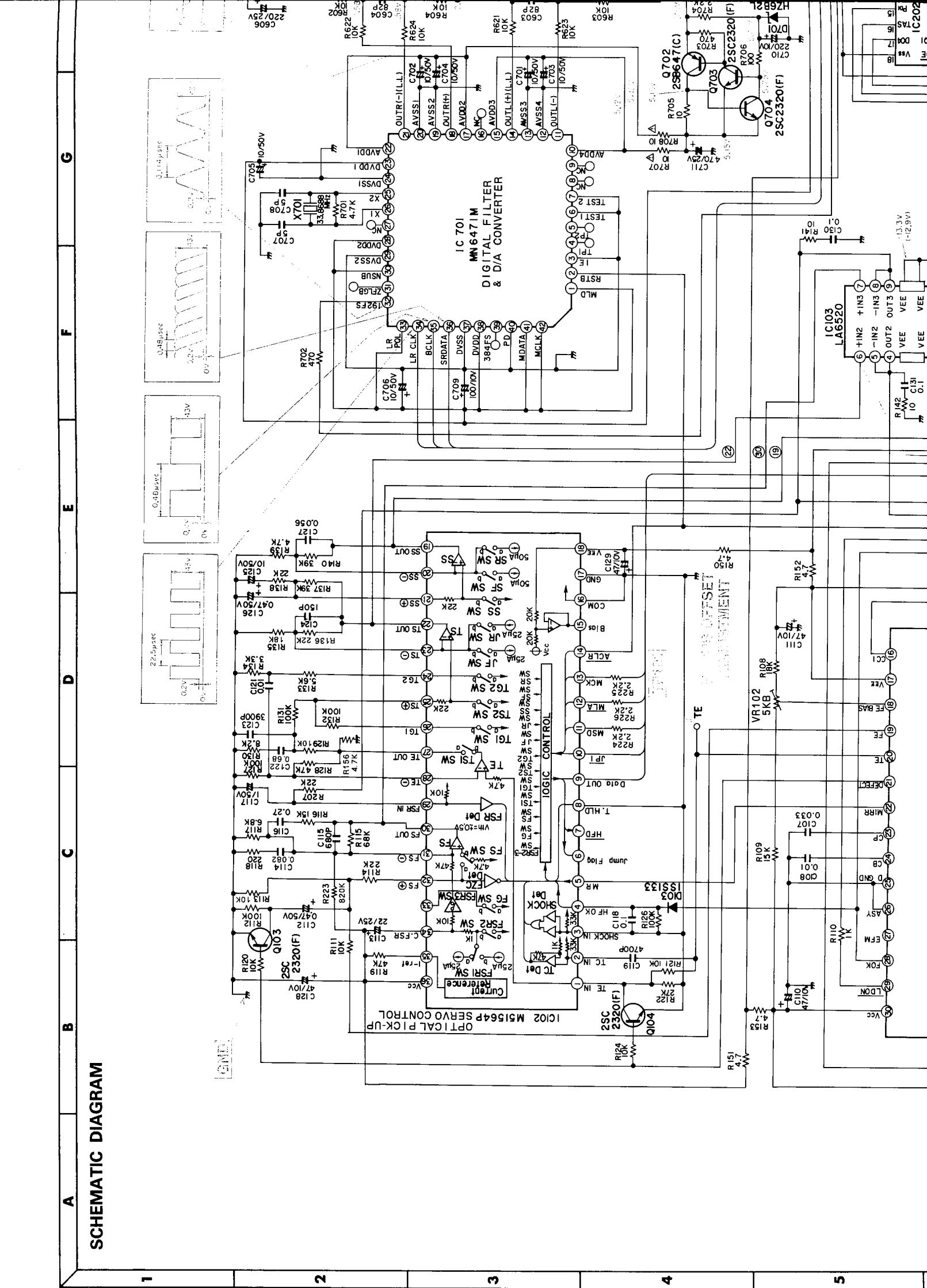
SCHEMATIC DIAGRAM
IC 701
MN6471M
DIGITAL FILTER
& D/A CONVERTER
IC103
LA6520
IC102 M51564P SERVO CONTROL
OPTICAL PICK-UP
IOGIC CONTROL
Current Reference
SS SW
SF SW
TS SW
JR SW
JF SW
TG2 SW
TG1 SW
TE SW
TSI SW
FS SW
FSR Det
FSR SW
FG SW
FSR3 SW
FSR2 SW
FSR1 SW
FZC
SHOCK Det
TC Det
TE OFFSET ADJUSTMENT
VR102 5KB
Q702 2SB647(C)
Q703 2SC2320(F)
Q704 2SC2320(F)
Q103 2SC 2320(F)
Q104 2SC 2320(F)
D103 1SS133
D701 HZ6B2L
X701 33.8688 MHz

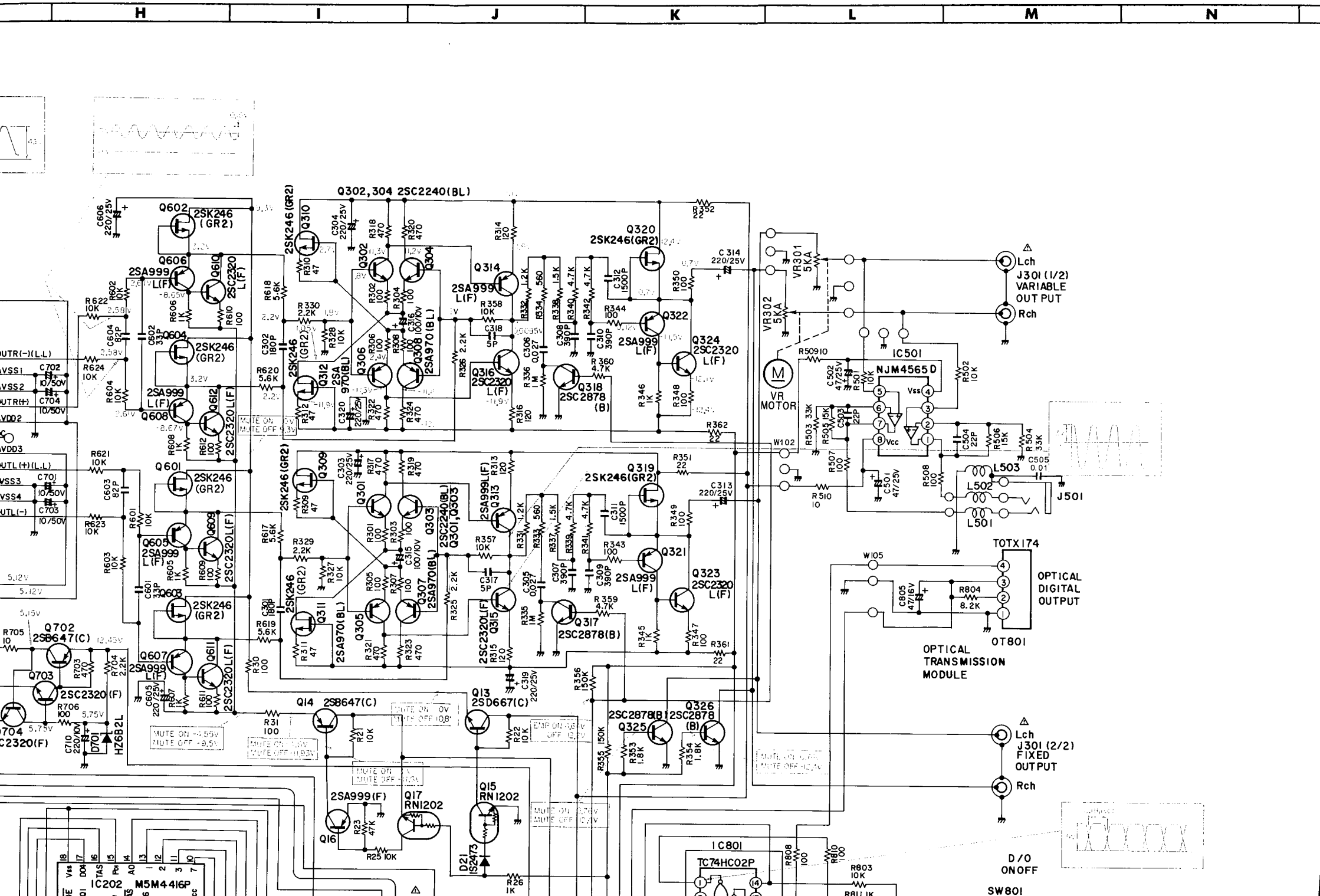
H
I
J
K
L
M
N
Q302,304 2SC2240(BL)
Q602 2SK246 (GR2)
Q606 2SA999 L(F)
Q610 2SC2320 L(F)
Q604 2SK246 (GR2)
Q608 2SA999 L(F)
Q612 2SC2320 L(F)
Q601 2SK246 (GR2)
Q605 2SA999 L(F)
Q609 2SC2320 L(F)
Q603 2SK246 (GR2)
Q607 2SA999 L(F)
Q611 2SC2320 L(F)
Q310 2SK246 (GR2)
Q302
Q304
Q306
Q308 2SA970(BL)
Q312 2SA970(BL)
Q314 2SA999 L(F)
Q316 2SC2320 L(F)
Q318 2SC2878 (B)
Q320 2SK246(GR2)
Q322 2SA999 L(F)
Q324 2SC2320 L(F)
Q309 2SK246 (GR2)
Q301
Q303 2SC2240(BL) Q301,Q303
Q305
Q307 2SA970(BL)
Q311 2SA970(BL)
Q313 2SA999L(F)
Q315 2SC2320L(F)
Q319 2SK246(GR2)
Q321 2SA999 L(F)
Q323 2SC2320 L(F)
Q317 2SC2878(B)
Q702 2SB647(C)
Q703 2SC2320(F)
Q704 2SC2320(F)
D701 HZ6B2L
Q14 2SB647(C)
Q13 2SD667(C)
Q325 2SC2878(B)
Q326 2SC2878 (B)
Q16 2SA999(F)
Q17 RN1202
Q15 RN1202
D21 1S2473
IC202 M5M4416P
IC801 TC74HC02P
VR301 5KA
VR302 5KA
VR MOTOR
IC501 NJM4565D
Lch
J301 (1/2) VARIABLE OUT PUT
Rch
J501
L501
L502
L503
TOTX174
OPTICAL DIGITAL OUTPUT
OT801
OPTICAL TRANSMISSION MODULE
J301 (2/2) FIXED OUTPUT
D/O ON OFF
SW801

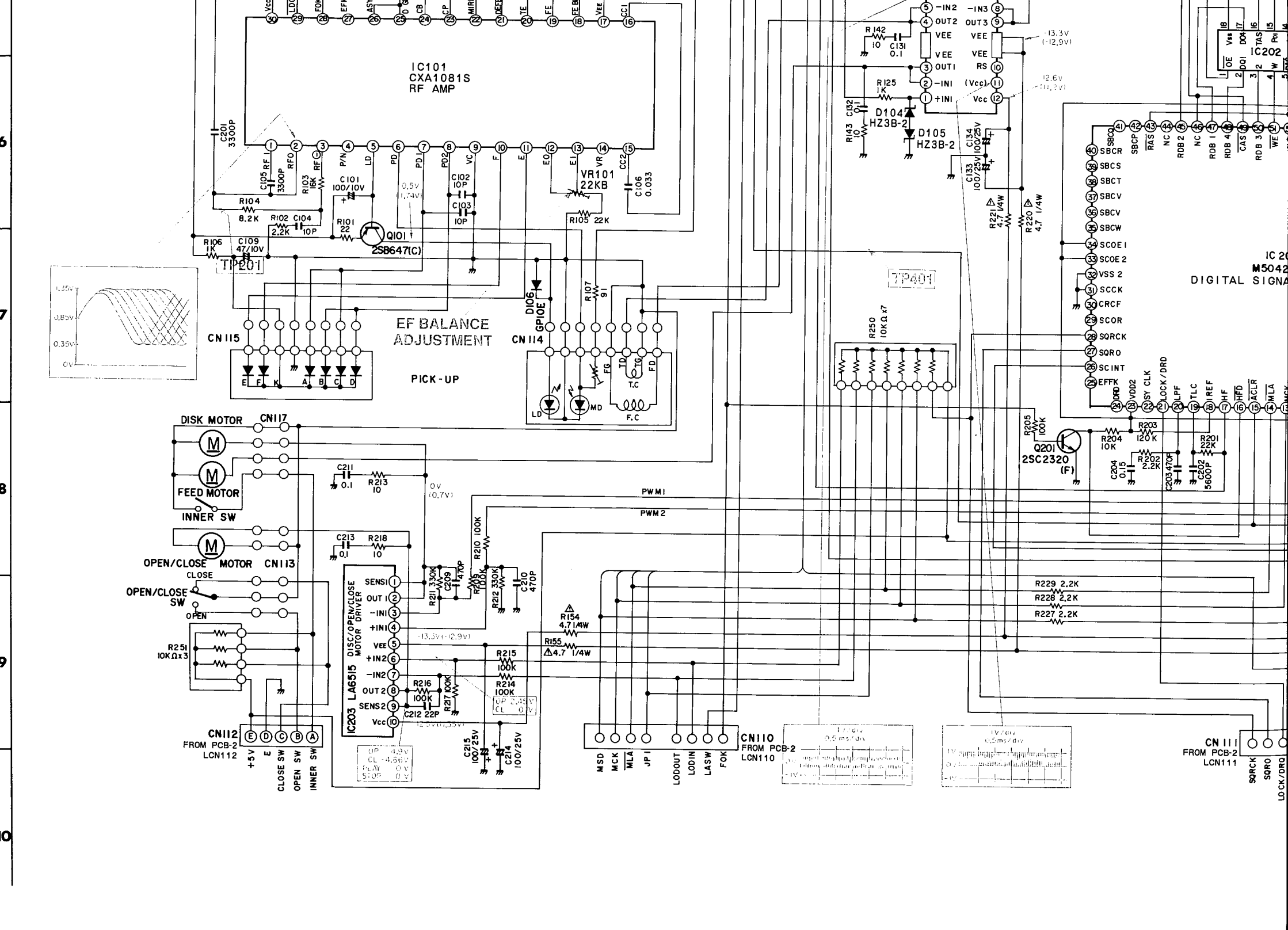

IC101
CXA1081S
RF AMP
IC202
IC 20
M5042
DIGITAL SIGNA
EF BALANCE
ADJUSTMENT
PICK-UP
TP201
TP401
CN115
CN114
CN117
DISK MOTOR
FEED MOTOR
INNER SW
OPEN/CLOSE MOTOR
CN113
OPEN/CLOSE
SW
CLOSE
OPEN
R251
10KΩx3
IC203 LA6515
DISC/OPEN/CLOSE
MOTOR DRIVER
CN112
FROM PCB-2
LCN112
+5V
E
CLOSE SW
OPEN SW
INNER SW
CN110
FROM PCB-2
LCN110
MSD
MCK
MLA
JPI
LODOUT
LODIN
LASW
FOK
CN111
FROM PCB-2
LCN111
SQRCK
SQRO
LOCK/DRQ
PWM1
PWM2
Q101
2SB647(C)
Q201
2SC2320
(F)
VR101
22KB
D104
HZ3B-2
D105
HZ3B-2
D106
GP10E
R250
10KΩx7
R251
10KΩx3

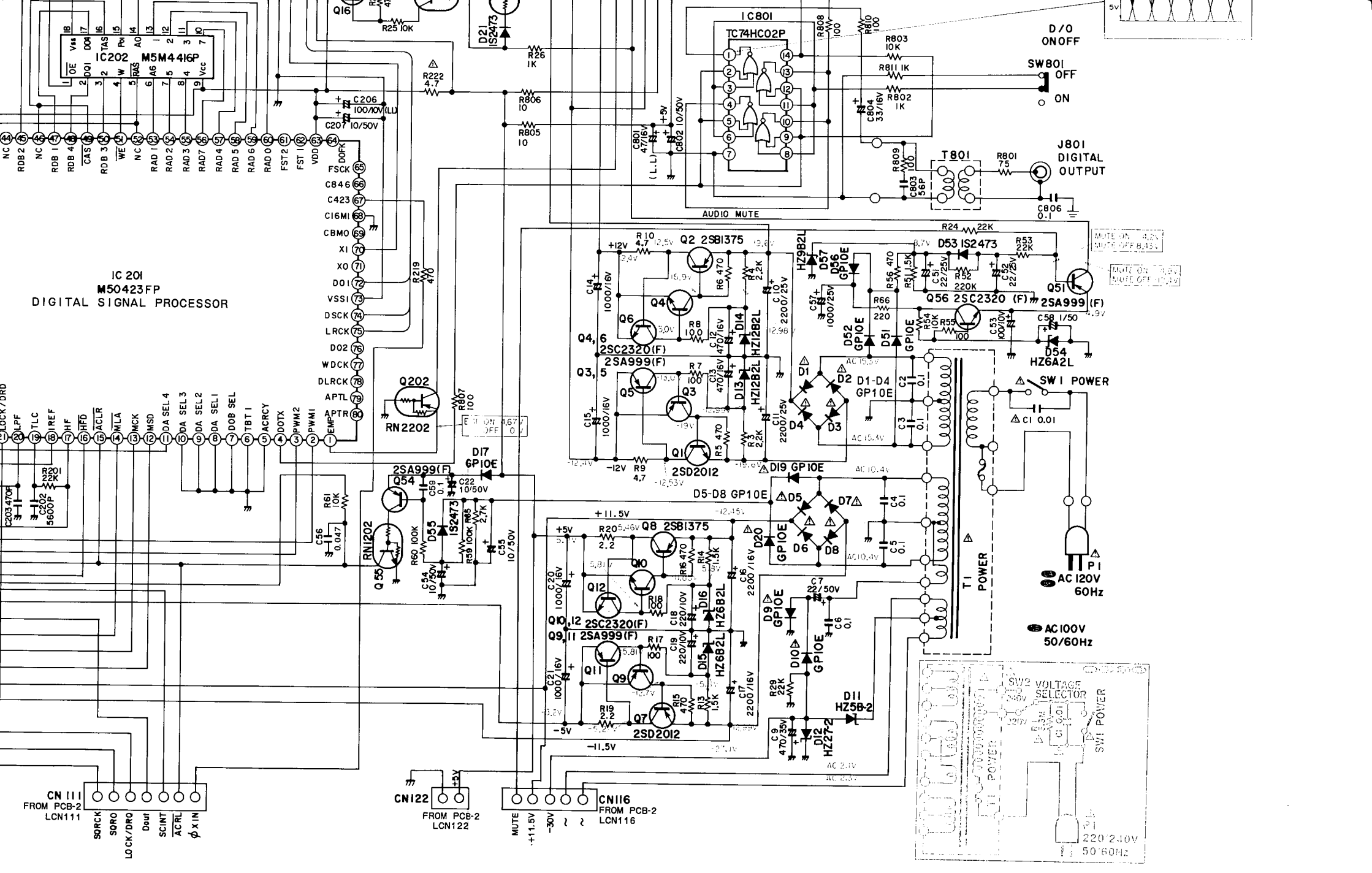
IC202 M5M4416P
IC 201
M50423FP
DIGITAL SIGNAL PROCESSOR
IC801
TC74HC02P
D/O
ONOFF
SW801
OFF
ON
J801
DIGITAL
OUTPUT
T801
AUDIO MUTE
Q2 2SB1375
Q4, 6
2SC2320(F)
2SA999(F)
Q3, 5
Q1
2SD2012
Q56 2SC2320 (F)
Q51
2SA999 (F)
D53 1S2473
D54
HZ6A2L
D1-D4
GP10E
D5-D8 GP10E
D19 GP10E
D20
GP10E
Q8 2SB1375
Q10
Q12
Q10,12 2SC2320(F)
Q9,11 2SA999(F)
Q11
Q9
Q7
2SD2012
D11
HZ5B-2
D12
HZ27-2
D17
GP10E
Q202
RN2202
RN1202
Q54
2SA999(F)
Q55
D55
1S2473
SW1 POWER
T1
POWER
P1
AC 120V
60Hz
AC100V
50/60Hz
SW2 VOLTAGE
SELECTOR
CN111
FROM PCB-2
LCN111
CN122
FROM PCB-2
LCN122
CN116
FROM PCB-2
LCN116
SQRCK
SQRO
LOCK/DRQ
Dout
SCINT
ACRL
φXIN
MUTE
+11.5V
-30V
220/240V
50/60Hz